This is a digital copy of a book that was preserved for generations on library shelves before it was carefully scanned by Google as part of a project to make the world's books discoverable online.

It has survived long enough for the copyright to expire and the book to enter the public domain. A public domain book is one that was never subject to copyright or whose legal copyright term has expired. Whether a book is in the public domain may vary country to country. Public domain books are our gateways to the past, representing a wealth of history, culture and knowledge that's often difficult to discover.

Marks, notations and other marginalia present in the original volume will appear in this file - a reminder of this book's long journey from the publisher to a library and finally to you.

Usage guidelines

Google is proud to partner with libraries to digitize public domain materials and make them widely accessible. Public domain books belong to the public and we are merely their custodians. Nevertheless, this work is expensive, so in order to keep providing this resource, we have taken steps to prevent abuse by commercial parties, including placing technical restrictions on automated querying.

We also ask that you:

+ *Make non-commercial use of the files* We designed Google Book Search for use by individuals, and we request that you use these files for personal, non-commercial purposes.
+ *Refrain from automated querying* Do not send automated queries of any sort to Google's system: If you are conducting research on machine translation, optical character recognition or other areas where access to a large amount of text is helpful, please contact us. We encourage the use of public domain materials for these purposes and may be able to help.
+ *Maintain attribution* The Google "watermark" you see on each file is essential for informing people about this project and helping them find additional materials through Google Book Search. Please do not remove it.
+ *Keep it legal* Whatever your use, remember that you are responsible for ensuring that what you are doing is legal. Do not assume that just because we believe a book is in the public domain for users in the United States, that the work is also in the public domain for users in other countries. Whether a book is still in copyright varies from country to country, and we can't offer guidance on whether any specific use of any specific book is allowed. Please do not assume that a book's appearance in Google Book Search means it can be used in any manner anywhere in the world. Copyright infringement liability can be quite severe.

About Google Book Search

Google's mission is to organize the world's information and to make it universally accessible and useful. Google Book Search helps readers discover the world's books while helping authors and publishers reach new audiences. You can search through the full text of this book on the web at `http://books.google.com/`

Stanford University Libraries
3 6105 127 792 914

1720

Shelf Number,

BANGOR PUBLIC LIBRARY.

ESTABLISHED

A. D. 1883.

BANGOR, MAINE.

Accession Number, 17634

INDEX

TO THE

EXECUTIVE DOCUMENTS

OF THE

HOUSE OF REPRESENTATIVES

FOR THE

SECOND SESSION OF THE FORTY-FOURTH CONGRESS.

1876—'77.

IN THIRTEEN VOLUMES.

Volume 1...No. 1, part 1, Foreign Relati ns.
Volume 2...No. 1, part 2, War: parts 1, 3, 4, and 2, volumes 1, 2, and 3.
Volume 3...No. 1, parts 3 and 4, (Postmaster and Navy.)
Volume 4...No. 1, part 5, Interior: parts 1 and 2.
Volume 5...No. 1, parts 6, 7, 8, and Nos. 7 to 20 inclusive.
Volume 6 ..No. 2.
Volume 7...Nos. 3 and 4.
Volume 8...Nos. 5, 6, and 36.
Volume 9...Nos. 21 to 44 inclusive, except 36, 40, and 43.
Volume 10...No. 40, parts 1 and 2.
Volume 11...No. 43, (Mail Contracts.)
Volume 12...No. 45, Commercial Relations.
Volume 13...No. 46, parts 1 and 2, Commerce and Navigation.

WASHINGTON:
GOVERNMENT PRINTING OFFICE.
1877.

LIBRARY
OF THE
LELAND STANFORD JUNIOR
UNIVERSITY.

A 25-68

INDEX

TO

THE EXECUTIVE DOCUMENTS

OF THE

HOUSE OF REPRESENTATIVES OF THE UNITED STATES

FOR THE

SECOND SESSION OF THE FORTY-FOURTH CONGRESS, 1876–'77.

Subject.	Vol.	Part.	No.
A.			
Argentine Republic, congratulations from the	9	.....	32
Army, use of the, message from the President of the United States in regard to the, in certain of the Southern States	9	.....	30
Attorney-General, annual report of the	5	.....	20
B.			
Baird, Professor, letter from, relative to the Government collection at the Centennial Exhibition	5	8	1
C.			
Cavalry force, increase of, on the Texas frontier	9	.....	33
Centennial Exhibition, Government collection at	5	8	1
report of board of United States Executive Departments at the	10	.....	40
Claims, list of 449, allowed by accounting-officers of the Treasury Department	9	.....	35
Commerce and Navigation, report of the Chief of Bureau of Statistics on the	13	.....	46
Commercial relations, report upon the, of the United States with foreign countries for the year 1876	12	.....	45
Commissioner of Internal Revenue, report of	7	.....	4
Commissioner of Patents, report of	8	.....	36
Comptroller of the Currency, annual report of the	7	.....	3
Contingent expenses, letter from the Postmaster-General, transmitting statement of the expenditure of the contingent-fund of his Department	5	.....	13
letter from the Secretary of the Navy, transmitting statement of the contingent-fund of his Department	5	.....	11
letter from the Secretary of State, transmitting statement of the disbursement of the contingent-fund of his Department, for the year ending June 30, 1876	5	.....	9
letter from the Secretary of the Treasury, transmitting the statement of the contingent-fund of his Department for the year ending June 30, 1876	9	.....	42
Currency, annual report of the Comptroller of	7	.....	3
Customs-officers, *fees received by*	9	.....	29

Subject.	Vol.	Part.	No.
D.			
District of Columbia, report of the Commissioners of the	5	6	1
administration of the provisional government of the	9	.....	26
report of the Board of Health of the	5	7	1
E.			
Eads, James B., settlement in favor of	9	1	28
issue of United States bonds to	9	2	28
Employés in the War Department, list of	9	.....	27
Engineers, Chief of, annual report of the, transmitted by the Secretary of War in his report, vol. 2, part 1	2	2	1
Estimates for Soldiers' and Sailors' Orphans' Home	5	.....	16
Expenses of the Navy Department, letter from the Secretary of the Navy, transmitting statement of the	5	.....	11
Expenses of War Department, letter from the Secretary of War, transmitting list of	5	.....	7
Extradition treaty between the United States and Great Britain, message of the President relative to	5	.....	15
F.			
Foreign relations, message of the President of the United States, transmitting papers relating to the, of the United States	1	1	1
H.			
Hallett's Point, destruction of the reef at	9	.....	24
Henry, Professor, letter from, relative to the Government collection at the Centennial Exhibition	5	8	1
I.			
Indians, letter from the Secretary of the Interior, transmitting tabular statements of the disbursements made from the appropriations for the Indian Department for the fiscal year ending June 30, 1876	8	.....	6
message from the President of the United States, transmitting letter from the Secretary of the Interior, relative to the removal of the Sioux	5	.....	10
Interior, Secretary of the, transmitting tabular statements of disbursements made from the appropriations for the Indian Department, for the fiscal year ending June 30, 1876	8	.....	6
annual report of the	4	5	1
letter from the, transmitting estimates for the Soldiers' and Sailors' Orphans' Home	5	.....	16
letter from the, relative to the removal of the Sioux Indians	5	.....	10
Internal Revenue, report of the Commissioner of	7	.....	4
International Exhibition, report of board of United States Executive Departments at the	9	.....	40
M.			
Mails, letter from Postmaster-General, relative to offers for carrying the	11	.....	43
McKinstry, Major Justus, letter from the Secretary of War in regard to the case	9	.....	25
Mill Creek, Ohio, harbor of refuge at	9	.....	34
Mississippi River, report of the engineer on the condition of the works at South Pass of the	5	.....	12
navigation of the	9	.....	41

Subject.	Vol.	Part.	No.
N.			
Navy, Secretary of the, annual report of the	3	4	1
letter from the, transmitting the report of board of officers relative to dispensation of navy-yards	5	.....	8
letter from the, transmitting statement of expenditure of the contingent fund of the Navy Department	5	.....	11
Navy-yards, letter from the Secretary of the Navy transmitting report of board of officers relative to the sale of	5	.....	8
O.			
Ohio, letter from the Secretary of War, transmitting a report on the harbor of refuge at Mill Creek, in	9	.....	34
Ordnance, Chief of, annual report of the, letter from the Secretary of War (vol. 3) inclosing the	2	2	1
P.			
Postmaster-General, annual report of the	3	3	1
letter from the, transmitting a statement of the expenditure of the contingent fund of his Department for the year ending June 30, 1876	5	.....	13
letter from the, relative to offers for carrying the mails	11	.....	43
Pretoria, South Africa, republic of, congratulations from the	9	.....	32
President of the United States, message from the, transmitting annual message and accompanying documents, 2d session 44th Congress	1	1	1
message from the, transmitting letter from the Secretary of the Interior relative to removal of Sioux Indians	5	.....	10
message from the, transmitting documents relative to the execution of the extradition article of the treaty of 1842 between the United States and Great Britain	5	.....	15
message from the, transmitting statement of the Secretary of War concerning appropriations for the improvement of rivers and harbors	9	.....	23
message from the, transmitting report of the Commissioners and board of audit of the District of Columbia	9	.....	26
message from the, transmitting statement relative to the use of the Army in certain of the Southern States	9	.....	30
message from the, relative to the imprisonment of John Jay Smith and Dr. Samuel Huggins	9	.....	31
message from the, assigning reasons for withholding his approval of the bill (H. R. 3367) to remove the charge of desertion from the military record of Alfred Rowland	9	.....	39
message from the, relative to the increase of the cavalry force upon the Texas frontier	9	.....	33
message from the, regarding the resumption of specie payments	9	.....	37
message from the, transmitting report of the Secretary of State concerning the agency of A. B. Steinberger	9	.....	44

Subject.	Vol.	Part.	No.
R.			
Railroads, report of the survey of the Union and Central Pacific	9	.....	38
Rivers and harbors, appropriations for	9	.....	23
River, Mississippi, report of the Chief Engineer on the condition of the works at the South Pass of the	5	.....	12
Rouland, Alfred, message from the President relative to the case of	9	.....	39
S.			
Seamen, registered, receiving citizenship	5	.....	17
Smith, John Jay, and Dr. Samuel Huggins, imprisonment of	9	.....	31
Soldiers' and Sailors' Orphans' Home, estimates for	5	.....	16
Specie payments, resumption of	9	.....	37
State, Secretary of, transmits statement of the disbursements of the contingent fund of his Department for the year ending June 30, 1876	5	.....	9
transmits statement of registered seamen receiving citizenship	5	.....	17
transmits statement of persons employed in that Department	9	.....	21
Statistics, report of the Chief of Bureau of	13	.....	46
Steinberger, A. B., message from the President relative to	9	.....	44
T.			
Texas, accounts of the State of	5	.....	14
Treasury, Secretary of the, annual report of the	6	.....	2
letter from the, transmitting estimates of appropriations for fiscal year ending June 30, 1878	8	.....	5
letter from the, transmitting statement of balance required to be appropriated for the fiscal year ending June 30, 1875, and prior years	5	.....	18
letter from the, transmitting estimate of appropriations required by the various departments for the year ending June 30, 1877, and prior years	5	.....	19
letter from the, transmitting documents in reference to the issue of United States bonds to James B. Eads	9	2	28
letter from the, transmitting a statement of fees received by customs-officers during the year ending June 30, 1876	9	.....	29
letter from the, transmitting report of the contingent expenses of the Treasury Department for the fiscal year ending June 30, 1876	9	.....	42
Treasury Department, list of 449 claims allowed by the accounting-officers of the	9	.....	35
W.			
War, Secretary of, transmits annual report of the Chief of Engineers, (vol. 2, part 1)	2	2	1
transmits annual report of the Chief of Engineers, (vol. 2, part 2)	2	2	1
transmits annual report of the Chief of Ordnance, (vol. 3)	2	2	1
transmits report of the contingent expenses of the War Department	5	.....	7
transmits report of the engineer on the condition of the works at the South Pass of the Mississippi River	5	.....	12
letter from the, concerning accounts of the State of Texas	5	.....	14
letter from the, in answer to House resolution calling for the number of enlisted men in the United States Army, and their present location	9	.....	22

Subject.	Vol.	Part.	No.
War, Secretary of, letter from the, transmitting the report of Lieut.-Col. John Newton upon the destruction of the reef at Hallett's Point	9	.....	24
letter from the, relating to the case of Major Justus McKinstry	9	.....	25
letter from the, transmitting list of employés in the War Department	9	.....	27
letter from the, transmitting papers and documents concerning the improvement of the South Pass of the Mississippi River	9	1	28
letter from the, transmitting a report on the harbor of refuge at Mill Creek, Ohio River	9	.....	34
letter from the, transmitting a report on the survey of the Union and Central Pacific Railways	9	.....	38

44TH CONGRESS, 2d Session. } HOUSE OF REPRESENTATIVES. { Ex. DOC. 1, Part 3.

REPORT

OF THE

POSTMASTER-GENERAL

OF THE

UNITED STATES;

BEING PART OF

THE MESSAGE AND DOCUMENTS

COMMUNICATED TO THE

TWO HOUSES OF CONGRESS

AT THE

BEGINNING OF THE SECOND SESSION OF THE FORTY-FOURTH CONGRESS.

WASHINGTON:
GOVERNMENT PRINTING OFFICE.
1876.

CONTENTS.

FINANCES.

	Page.
Financial condition	iii
Estimates for 1878	iv
Special appropriations	iv
Deficiency appropriations	v
Net balance on deficiency appropriations	v
Issues of postage-stamps, stamped envelopes, and postal cards	v
Increase in issues	v
Lost postage-stamps	v
Dead letters	vi

CONTRACTS.

Transportation statistics	vi
Re-adjustment of pay on railroad-routes	vii
Fines and deductions	vii
Mail bags, locks, and keys	vii
Mail depredations	viii
Railway post-office lines	ix
Post-route maps	ix

FOREIGN MAILS.

Postal Union treaty	ix
Weights of mails sent to Europe	x
Cost of sea-transportation	x
Atlantic sea-postages on foreign closed mails	xi
Total cost of ocean mail-service	xi
Expiration of mail-subsidy to China line	xi
Increased territory of General Postal Union	xii
Modifications of treaty and regulations proposed through the international bureau	xii
Postal convention with Queensland	xiv
Additional postal agreement with Japan	xiv
Postal convention with Bermuda	xiv
Additional agreement with Newfoundland	xiv
Pending negotiations for new postal arrangements	xiv

APPOINTMENTS.

Number of post-offices	xv
Number of appointments	xv
Cases acted on	xv
Special, route, and local agents	xv
Number of officers, agents, and employés in the postal service	xv
Free delivery	xvi
Aggregate results of free-delivery service	xvii
Salaries of letter-carriers	xvii
Number of money-order offices	xvii
Issues and payments	xvii
Duplicate orders	xviii
Receipts and expenditures	xviii
Deposit of surplus funds	xx
Orders improperly paid	xx
Exchange of postal money-orders with foreign countries	xxi
General financial results	xxii

MISCELLANEOUS.

Salaries of postmasters	xxiii
Straw-bids	xxvi
Reduction of pay to railroads	xxvii
Withdrawal of fast-mail trains	xxviii
Interference with postal officers and employés	xxix
Transit-charges on British closed mails	xxx
Postal deficiencies	xxx

CONTENTS OF APPENDIX.

Page.

No. 1. Estimates for expenditures for the fiscal year ending June 30, 1878 1
No. 2. Estimate of indebtedness of the Post-Office Department for the fiscal year ended June 30, 1876, (not yet adjusted) 23
No. 3. Statement exhibiting the receipts and expenditures under appropriate heads, by quarters, for the fiscal year ended June 30, 1876, compared with fiscal years ended June 30, 1875, and June 30, 1874 24
No. 4. Receipts and disbursements at Treasury depositories during the fiscal year ended June 30, 1876 26
No. 5. Receipts and disbursements at depository post-offices on account of the fiscal year ended June 30, 1876 28
No. 6. Postage-stamps, stamped envelopes, newspaper-wrappers, and postal cards issued during the fiscal year ended June 30, 1876 31
No. 7. Postage-stamps, stamped envelopes, newspaper-wrappers, and postal cards issued during the fiscal year ended June 30, 1876 35
No. 8. Statement of official stamps and stamped envelopes furnished each of the Executive Departments during the fiscal year ended June 30, 1876 37
No. 9. Statement showing the increase in the issue of postage-stamps, stamped envelopes, newspaper-wrappers, and postal cards, including the issues for official use, for the year ended June 30, 1876, over those of the preceding year 38
No. 10. Statement showing the number of dead letters received and disposed of during the fiscal year ended June 30, 1876 39
No. 11. Statement showing the classification and disposition of letters containing valuable inclosures during the fiscal year ended June 30, 1876 40
No. 12. Statement showing number, contents, and disposition of registered letters received during the fiscal year ended June 30, 1876 40
No. 13. Number of registered letters transmitted through the mails, from each State and Territory in the United States, during the fiscal year ended June 30, 1876 41
Letter of Second Assistant Postmaster-General referring to tables 43
A. Table of mail-service for the year ended June 30, 1876, as exhibited by the state of the arrangements at the close of the year 44
B. Railroad-service as in operation on the 30th of June, 1876 46
C. Steamboat-service as in operation on the 30th of June, 1876 83
D. Table showing the increase and decrease in mail-transportation, and cost, during the year ended June 30, 1876 88
E. Table showing the weight of the mails, the speed with which they are conveyed, the accommodations for mails and agents, the trips per week, and the rates of pay per mile per annum on railroad-routes in States in which the contract-term expired June 30, 1876, and also in other States and Territories, the returns having been obtained with a view to the re-adjustment of the pay in accordance with the act of March 3, 1873; and used also in accordance with the act of July 12, 1876, in the case of re-adjustments taking effect on and after July 1, 1876 90
Index to Table E 118
F. Table showing the re-adjustment of the rates of pay per mile on railroad-routes in States in which the contract-term expired June 30, 1876, and in other States and Territories, and on certain new routes the adjustment of the rates, based upon returns of the weight of the mails, the speed with which they are conveyed, the accommodations for mails and agents, and the number of trips per week, in accordance with the act of March 3, 1873, and with the act of July 12, 1876, in the case of re-adjustments taking effect on and after July 1, 1876 122
Index to Table F 154
G. Statement of the number, description, and prices of mail-bags, mail-bag catchers, mail locks and keys purchased, and of the expense incurred on account thereof, during the fiscal year ended June 30, 1876 157
H. Railway post-office lines in the United States June 30, 1876, showing the increase in the service since June 30, 1875 158
Report relative to operations of railway mail-service 160
Statement of the weight of mails dispatched to postal-union countries during the year 168
Arrangement concerning the entrance into the General Postal Union of British India and the French colonies 168
Postal convention between the United States of America and the colonial government of Queensland 172
Additional agreement between the United States of America and the empire of Japan. modifying the provisions of the postal convention of the 6th of August, 1873, and also of the agreement of April 26, 1875, between the two countries 175
Postal convention between the United States of America and Bermuda 76

Page.

Additional articles of agreement between the Post-Office Departments of the United States of America and Newfoundland 180

Special arrrangement between the General Post-Offices of the United States and the United Kingdom, fixing rates of territorial transit-charges on British closed mails conveyed across the American continent between Boston or New York and San Francisco 180

Table showing the increase and decrease of post-offices in the several States and Territories; also the number of post-offices at which appointments are made by the President and by the Postmaster-General, for the year ended June 30, 1876 182

Operations of the appointment-office for the year ended June 30, 1876 183

Statement of the operations of the free-delivery system for the year ended June 30, 1876 184

Report of the Auditor of the Treasury for the Post-Office Department 191

REPORT

OF

THE POSTMASTER-GENERAL.

POST-OFFICE DEPARTMENT,
Washington, D. C., November 27, 1876.

SIR: The expenditures of this Department during the fiscal year ended June 30, 1876, were $33,263,487 58

The revenues were as follows:

Ordinary receipts	$28,453,426 66	
Receipts from money-order business ..	190,770 84	
Amount received from the general Treasury as sums appropriated to steamship-lines	537,500 00	
		29,181,697 50
Excess of expenditures over receipts		4,081,790 08

Included in the above statement of expenditures is the sum of $467,301.42 paid on liabilities incurred in previous fiscal years and not properly chargeable to the expenditures of the last fiscal year. Deducting this sum from the aggregate amount, the actual expenditures for the year were $32,796,186.16.

The expenditures and receipts of the Department, therefore, on account of and appertaining to the business of the last fiscal year (excluding expenditures on account of previous years) are as follows, to wit:

Expenditures	$32,796,186 16
Receipts, ordinary and from money-order business	28,644,197 50
Leaving an excess of expenditures over and above departmental receipts of	4,151,988 66

The expenditures during the fiscal year were $523,196.21 more than those of the preceding year, and $3,700,546.42 less than the estimates therefor.

The ordinary receipts for the year were $1,782,208.16 (or 6.26 per cent.) more than those of the preceding year, and $33,541.50 (or 0.11 per cent.) more than the estimates therefor.

The expenditures and receipts by fiscal quarters, and the increase or decrease therein as compared with the corresponding quarters of 1873–'74 and 1874–'75, are shown by Table 4 which accompanies the report of the Third Assistant Postmaster-General.

There was drawn from the Treasury during the fiscal year on appropriations—

For steamship service to Japan and China	$500,000 00
For steamship service to Brazil	37,500 00
To supply deficiencies in the revenues for the year ended June 30, 1876	4,000,000 00
To meet deficiencies of previous fiscal years	551,029 23
In pursuance of act of Congress (private, No. 12) of June 23, 1876	53 80
Total	5,088,583 03

The estimated expenditures for the fiscal year ending June 30, 1878, are		$36,723,432 43
The ordinary revenues are estimated at 7 per cent. over the past fiscal year, making	$30,445,165 00	
Estimated revenue from money-order business	200,000 00	
Total estimated revenue for the fiscal year ending June 30, 1878		30,645,165 00
Estimated excess of expenditures to be appropriated out of the general Treasury as a deficiency		6,078,267 43

Of the appropriations for deficiencies there were unexpended on June 30, 1875, the following amounts:

For fiscal year ended June 30, 1871	$14,146 38
For fiscal year ended June 30, 1872	3,393 98
For fiscal year ended June 30, 1873	680,830 11
For fiscal year ended June 30, 1874	1,006,574 51
For fiscal year ended June 30, 1875	1,097,842 00
	2,802,786 98
Amount appropriated for fiscal year of 1875–'76	6,852,705 00
Total	9,655,491 98

During the past fiscal year the following amounts were drawn on account of payments for previous fiscal years, viz:

For fiscal year of 1870–'71	$14,146 38
For fiscal year of 1871–'72	3,393 98
For fiscal year of 1874–'75	533,488 87
For fiscal year of 1875–'76	4,000,000 00
A total of	4,551,029 23

Amount of deficiency appropriations undrawn and available for payments of indebtedness to June 30, 1876		$5,104,462 75
Against the above sum there are chargeable the following unsettled accounts, estimated:		
Balance due foreign countries	$12,000 00	
Mail-service under contract, or recognized, not yet reported for payment	989,069 50	
Mail-service unrecognized	353,024 85	
Total		1,354,094 35
Leaving after settlement of all liabilities to June 30, 1876, a net balance on deficiency appropriations of		3,750,368 40

POSTAGE-STAMPS, STAMPED ENVELOPES, AND POSTAL CARDS ISSUED.

The number of ordinary postage-stamps issued during the past fiscal year was 698,799,090, valued at	$18,773,454 00
Newspaper and periodical stamps, 1,290,347	945,254 75
Stamped envelopes, plain, 82,467,000	2,280,318 74
Stamped envelopes, request, 64,554,500	2,079,578 30
Newspaper-wrappers, 18,498,750	273,723 50
Postal cards, 150,815,000	1,508,150 00
Official postage-stamps, 17,682,665	663,831 50
Official stamped envelopes and wrappers, 15,690,155	429,110 93
Aggregating 1,049,797,507	26,953,421 72

The following table shows the increase in stamps of all kinds, stamped envelopes, newspaper-wrappers, and postal cards over the previous year:

Description.	Fiscal year ended June 30, 1876.	Fiscal year ended June 30, 1875.	Increase.	
			Value.	Per cent.
Ordinary postage-stamps	$18,773,454 00	$18,271,479 00	$501,975 00	2.74
Stamped envelopes, plain	2,280,318 74	2,046,111 35	234,207 39	11.44
Stamped envelopes, request	2,079,578 30	1,791,686 25	287,892 05	16.06
Newspaper-wrappers	273,723 50	286,679 74	*12,956 24	*4.50
Newspaper and periodical stamps	945,254 75	815,902 47	129,352 28	15.85
Postal cards	1,508,150 00	1,076,160 00	431,990 00	40.14
Total, after deducting for decrease in item of newspaper-wrappers			1,572,460 48	6.47
Official stamps, and stamped envelopes and wrappers	1,092,942 43	1,189,492 43		
Deduct for decrease in last item			96,550 00	8.11
Aggregate	26,953,421 72	25,477,511 24	1,475,910 48	5.79

* Decrease.

During the past fiscal year there has been a loss of seven packages of stamps, stamped envelopes, and postal cards, of the aggregate value of only $147.45.

The amount of postage collected during the year, under the act of Congress approved June 23, 1874, (which took effect January 1, 1875,) on newspaper and periodical publications mailed to regular subscribers or news agencies from known offices of publication, commonly known as second-class matter, was $1,014,154.27, derived from 39,444,599 pounds of matter at 2 cents per pound, and 7,508,743 pounds at 3 cents per pound. The amount collected during the six months ending June 30, 1875, was $486,443.49. The increase is therefore at the rate of $41,267.29, or 4.24 per cent. per annum.

The operations of the Dead-Letter Office are fully stated in the report of the Third Assistant Postmaster-General, and tables Nos. 10, 11, and 12, appended thereto. This business may be briefly summarized as follows: Total number of letters received during the year, 3,542,494, an average of 11,540 for each working day, and classified thus: ordinary mail letters, 2,355,194; local or drop, 445,000; of domestic origin returned from foreign countries, 108,632; foreign origin, 195,800; returned to post-offices by proprietors of hotels, 45,136; held for postage, 307,559;

misdirected, 69,797; ship, 2,884; without address, 6,945; and 5,547 registered letters. They are further classified according to their contents as follows: 25,740 contained $41,447.17 in money; 12,043 contained commercial paper to the value of $1,754,648.31; 846 contained deeds, mortgages, leases, railroad and other passage tickets, pension certificates, and bank-books; 37,054 contained postage-stamps; 31,318 contained photographs; 20,367 contained jewelry, clothing, books, chromos, music, merchandise, &c.; 25,788 contained receipts, bills of lading, affidavits, abstracts of title, paid notes, and canceled obligations of all sorts.

The whole number of registered letters received, including 201 from last fiscal year, was 5,748, of which 5,422 were delivered. The amount of money taken from letters which could not be restored to the owners was $6,052.53. Amount realized from sale of Dead-Letter Office property at auction, $2,853.17.

CONTRACTS.

There were in the service of the Department on the 30th of June, 1876, 6,126 contractors for the transportation of the mails on public routes.

There were at the close of the year 1,718 special offices, each with a mail-carrier whose pay from the Department is not allowed to exceed the net postal yield of the office.

Of public mail-routes in operation there were 9,003, (of which 912 were railroad, being an increase of 41 routes of this class over the previous year,) aggregating in length 281,798 miles; in annual transportation, 136,269,708 miles; in annual cost, $15,201,140. Adding the compensation of railway-post-office clerks, route-agents, mail-route messengers, local agents, and mail-messengers, amounting to $3,159,908, the aggregate annual cost will be $18,361,048.

The service was divided as follows:

Railroad-routes: length, 72,348 miles; annual transportation, 77,741,172 miles; annual cost, $9,543,134—about 12.27 cents per mile.

Steamboat-routes: length, 14,883 miles; annual transportation, 3,704,533 miles; annual cost, $606,465—about 16.37 cents per mile.

Other routes, upon which the mails are required to be conveyed with "celerity, certainty, and security:" length, 194,567 miles; annual transportation, 54,824,003 miles; annual cost, $5,051,541—about 9.21 cents per mile.

There was an increase over the preceding year in length of routes of 3,925 miles; in annual transportation, of 2,447,492 miles; and a decrease in cost of $152,229. Adding the increased cost for railway-post-office clerks, route, local, and other agents, $228,107, the total increase in cost was $75,878.

The railroad routes have been increased in length 2,265 miles, and in cost $326,616, against an increase last year of 2,349 miles in length, and *$626,855 in cost.*

RE-ADJUSTMENT OF PAY ON RAILROAD ROUTES.

Returns showing the weight of mails and other particulars respecting the service performed on railroad routes in States in which a new contract term commenced on the 1st of July, 1876, as well as in other States and Territories, are given in tables E and F in the appendix.

FINES AND DEDUCTIONS.

The amount of fines imposed upon contractors, and deductions made from their pay for failures and other delinquencies, for the year was $122,563.15, and the amount remitted during the same period was $13,085.49, leaving the net amount of fines and deductions $109,477.66.

MAIL BAGS, LOCKS, AND KEYS.

A table appended to this report exhibits in detail the number, description, and cost of mail-bags and mail-catchers, and of mail locks and keys purchased under contracts during the last fiscal year. The total number of mail-bags purchased and put into service was 103,794, of which 80,980 were for the transmission of printed and third-class matter, and 22,814 were chiefly for the transmission of letters or first-class matter. The total cost of mail-bags and mail-catchers, including repairs, labels, &c., amounted to $208,847.49.

Compared with the preceding year, there was an increase of 23,744 mail-bags and 650 mail-catchers, and of $21,699.41 in the total cost of mail-bags and mail-catchers, during the last fiscal year; such increase being occasioned by expanded mail facilities. The total cost of mail locks and keys was $16,720.95. The total cost during the preceding year was $31,840.

An entire re-organization of the system of repairing mail-bags was effected during the last year, which has resulted in a very great reduction of that item of expense. During the preceding year, under the old system which had prevailed for many years, and under which all repairs were made on special contracts with persons outside of the Department, the cost thereof was $92,419.95. For the last fiscal year, during which the repairs were all made by persons directly employed at annual salaries in the several post-offices which are mail-bag depositories, the expense was reduced to $30,161.92—a saving of $62,258.03.

MAIL-DEPREDATIONS.

During the year ended June 30, 1876, 291 persons were arrested for violations of the postal laws and regulations, and given in charge to the United States authorities for trial, with the following results, viz:

Convicted	127
Acquitted	11
Otherwise disposed of	48
Awaiting trial	105
Total	291

In addition to the above, 148 persons were arrested charged with similar offenses, but as there were circumstances connected with said arrests which made the parties amenable to State laws, it was deemed better to hand them over to the State authorities. These, added to the number held for trial in United States courts, aggregate 439 persons arrested during the year. Of this number, only 151 were employés of the Post-Office Department; and when it is considered that United States mails are transported annually over 136,000,000 miles of mail-routes, and are handled by 50,000 persons, this exhibit will be considered very satisfactory.

The number of recorded complaints during the year is 6,640, involving the loss or rifling of 6,726 letters, aggregating in value, in money, bonds, drafts, &c., $146,028.29, of which 2,155 were registered, valued at $25,829.69, and 4,571 unregistered, valued at $130,198.60. Of the 1,597 registered letters reported missing, 833 were satisfactorily accounted for, and 764, valued at $16,794.16, are reported as actually lost.

Of the 764 lost, 196, valued at $4,295.74, were made good; and of the 558 registered letters reported rifled of contents, valued at $9,478.08, the contents of 77, aggregating in value $1,861.04, were recovered and restored to the owners. Cases numbering 382 remain in the hands of the special agents under investigation.

The whole number of letters registered throughout the United States during the year ended June 30, 1876, was 4,007,817, while this exhibit shows an actual loss of only 1,049, about $\frac{26}{1000}$ of 1 per cent., or $2\frac{3}{5}$ for every 10,000 registered letters mailed.

RAILWAY-POST-OFFICE LINES.

A tabular statement hereto appended shows that the number of railway-post-office lines in operation on the 30th of June, 1876, was 63, extending over 17,713 miles of railroad routes; an increase of 1 line and of 781 miles compared with the preceding year.

The number of clerks employed was 1,042, at an annual cost of $1,278,340; an increase of 141 clerks and $155,700. Upon 14,591 miles the service is performed daily, and upon 3,122 miles twice daily, equivalent in all to 20,835 miles each way daily.

Counting all the lines both ways, the aggregate service is 41,671 miles daily.

POST-ROUTE MAPS.

During the year new post-route maps have been prepared and published of the States of Florida, Kansas, Nebraska, Alabama, Mississippi, and Minnesota. New editions of the various maps previously issued, embracing all the northern and middle States, and some others, have also been issued for the use of the officers and clerks of the Department, as well as to supply the requirements of postmasters, special agents, and the railway mail-service, in properly distributing the mails.

Drawings for maps ot the States of Georgia, Arkansas and the In-

dian Territory, Kentucky, Tennessee, and of the greater number of the Territories, were in course of preparation with a view to bringing out engraved or lithographed prints of them during the present fiscal year, only a few of these maps in manuscript being hitherto in existence; but the failure to receive adequate appropriations for this purpose, and the consequent reduction of the force of draughtsmen and clerks, has made it necessary to lay aside almost entirely this desirable work. In the estimates herewith submitted, I have included the amount required for the resumption of this work.

FOREIGN MAILS.

The Postal Union treaty, which went into operation at the commencement of the fiscal year, has greatly simplified the operations of our postal exchanges with European countries; as, under its provisions, each country retains to its exclusive use all the postages which it collects. All postage-accounts on the direct correspondence reciprocally exchanged between Postal Union countries have been discontinued, and therefore no record has been kept of the number of letters exchanged, or the amounts of postage thereon, as was the practice under the separate postal arrangements previously in force. The weights, only, of the letter and printed-matter mails dispatched to Postal Union countries have been accurately taken, for the purpose of making payments for the intermediate sea and inland transit charges thereon; which charges are, by the provisions of the treaty, defrayed by the post department of the country dispatching the mails.

The total weights of the mails dispatched from the United States to Postal Union countries during the year were as follows: Letters, 95,984,186 grams, equal to 3,386,103 ounces; printed matter and samples, 366,552,486 grams, equal to 12,935,398 ounces—being an increased weight over 1875 of 155,063 ounces of letters and 1,727,567 ounces of printed matter and samples. A statement is appended of the weight of mails dispatched to each Postal Union country.

The reduced rates of transatlantic sea-postage of 6 francs 50 centimes per kilogram of letters and 50 centimes per kilogram of other mail-matter, established by the General Postal Union treaty, have been allowed and paid, at their current gold value, to the respective steamship lines transporting our mails to Europe, with the exception of the American line from Philadelphia to Liverpool, which has received a compensation in excess of the sea-postages, fixed by special agreement, at $3.25 per kilogram of letters and 10 cents per kilogram of other mail matter.

The cost of the United States transatlantic mail-steamship service for the year 1876 was $172,343.09, being a reduction of $55,755.16 from the cost of the same service for the year 1875. The payments made to the respective steamship lines carrying mails to Europe were as follows:

The Cunard line, for 51 trips from New York and 51 trips from Boston to Queenstown and Liverpool..... $43,627 79

The Hamburg-American Packet Company, for 39 trips from New York and 14 trips from Philadelphia to Plymouth, Cherbourg, and Hamburg	$38,863 31
The North German Lloyd of Bremen, for 53 trips from New York and 21 trips from Baltimore to Southampton and Bremen	28,680 51
The Liverpool and Great Western, (Williams & Guion,) for 39 trips from New York to Queenstown and Liverpool	24,874 85
The White Star line, for 33 trips from New York to Queenstown and Liverpool	17,089 72
The Inman line, for 19 trips from New York to Queenstown and Liverpool	9,281 27
The Canadian line, for 53 trips to Liverpool	3,603 05
The Anchor line, for 51 trips from New York to Glasgow	2,246 72
The General Transatlantic Steamship Company, for conveying mails from New York to Havre	2,076 90
American Steamship Company, for 46 trips from Philadelphia to Queenstown	1,996 05
The Netherlands Steam Navigation Company, for 5 trips from New York to Rotterdam	2 92
Total	172,343 09

The payments made to the respective transatlantic lines, on account of transportation of the British and French closed mails from New York to Europe, were as follows:

To the Liverpool and Great Western Steamship Company	$1,502 80
To the Cunard line	2,953 52
To the White Star line	54 42
To the Hamburg-American Packet Company	517 20
To the North German Lloyd of Bremen	499 88
To the Eagle line	5,409 57
To the Inman line	1,314 99
To the Snow & Burgess line	63 98
Total	12,316 36

The United States postages on mails conveyed to and from the West Indies, Panama, Central America, Brazil, Mexico, Bermuda, Nova Scotia, New Granada, Venezuela, and Honolulu, at the reduced rates established from July 1, 1875, amounted to $119,617.68, and the cost of the sea conveyance thereof was $45,436.79.

The United States postages on mails exchanged with Japan and China, by means of the subsidized line of direct mail steamers, amounted to $18,679.36.

The total cost of the United States ocean mail-steamship service for the year 1876 (including $537,500 paid from special appropriation for steamship service to Japan and China and to Brazil) was $755,279.88, being a reduction of $231,356.78 from the cost of the same service for the year 1875.

The contract with the Pacific Mail Steamship Company, authorized by acts of Congress approved February 17, 1865, and February 18, 1867, for the conveyance of a monthly mail from San Francisco to Japan and China, will expire by limitation on the 31st of December, 1876, and, in the absence of special legislation by Congress authorizing a continuance

of the mail-service on this important route at a higher rate of compensation, the provisions of the general law, limiting the compensation to be allowed for the transportation of the mails by sea to the amount of postages on the mails conveyed, will become applicable to any steamship service which may be performed on this route on and after January 1, 1877.

It is but just to say that the contractors for this service, notwithstanding serious embarrassments and difficulties, have transported the mails throughout the contract-term of ten years with uninterrupted regularity, and in a manner entirely satisfactory to the Department. The steamships employed in the service were built in the United States, and are first-class in all respects. They constitute, at present, the only American ocean-steamship line, except that now performing weekly trips between Philadelphia and Liverpool; all other transatlantic and Pacific mail-service being performed by steamships sailing under the flags of other nations.

The additional monthly mail service to Japan and China by the Occidental and Oriental line of steamers, (an English line,) for the compensation of the sea-postages, referred to in the last annual report, was abandoned by the owners of said line, who refused to transport the mails on these terms. The Department has also been unable to secure any regular direct mail communication with Brazil for the compensation of the sea-postages.

The general postal union treaty concluded at Berne, October 9, 1874, has been in operation since July 1, 1875, with the most satisfactory results. Our people have enjoyed the advantages of the cheap and uniform postage-rates which have been established to all parts of the civilized world, and the Post-Office Department has also been financially benefited by the greater simplicity of postal operations under its provisions, as well as by the entire suppression of postage accounts on the postal union correspondence. The territory of the union has been greatly enlarged by the accession, from the 1st of July, 1876, of British India, (comprising Hindostan, British Burmah, and Aden,) and the French colonies in America, Africa, Asia, and Oceanica, under an arrangement fixing the conditions of their adhesion to the stipulations of the treaty, signed at Berne, the 27th January, 1876, by delegates of the several postal administrations interested in their admission, a copy of which is appended. British India and the French colonies having been admitted subject to an additional charge of 25 francs per kilogram of letters, and 1 franc per kilogram of printed matter and samples, to cover the expenses of sea-transportation beyond the limits of the postal union as originally formed by the Berne treaty, it was necessary to fix the rates of postage to British India and the French colonies at double the ordinary postal-union rates.

Montenegro, Gibraltar, (as subordinate to the postal administration of Great Britain,) and the islands of Gozzo, Comino, and Cominotto, as

dependencies of Malta, have also been embraced in the postal union on the terms of the original treaty.

Propositions have been formally submitted by the international bureau at Berne to the vote of the postal administrations of the union, for the admission into the union, from the 1st of April next, of all the Spanish and Dutch colonies, and certain of the British colonies, as follows:

1st. To admit into the General Postal Union, from April 1, 1877, upon the same conditions as the French colonies and British India, that is to say, upon the conditions of the arrangement signed at Berne, 27th January, 1876, all of the Spanish colonies and the Dutch colonies, as well as the British colonies of Ceylon, the establishments of Detroit, (Straits Settlements,) Labuan, Trinidad, and British Guiana.

2d. To admit also into the union, from April 1, 1877, and upon the same conditions as the above-mentioned colonies under No. 1 above, the British colonies of the Bermuda Islands and Jamaica, but with the reservation, specially concerning the postal relations between the United States and these two colonies, that the maritime rate of francs 6.50 per kilogram of letters shall replace that of 25 francs, applicable to the relations of all the other union countries with the Bermuda Islands and Jamaica.

This Department has given its assent to the admission of all these colonies into the postal union at the date named, on condition that the reservation made to the admission of the Bermudas and Jamaica. in No. 2 above, be also applied to Cuba, Porto Rico, Curaçoa, and other Spanish and Dutch colonies in the West Indies.

Applications have also been made for the admission into the postal union of the empire of Brazil, Canada, Newfoundland, the Sandwich Islands, Japan, and the British colony of Hong-Kong, but no agreement has been reached in regard to the conditions of their admission.

Many questions relating to the proper construction to be given to provisions of the treaty, and detailed regulations, have been submitted through the international office at Berne for the opinions of the respective postal administrations, and modifications of the provisions thereof have been proposed through the international office, but in the majority of cases they have failed to receive a uniform interpretation or the unanimous vote of the postal administrations required for their adoption, and their consideration has therefore been postponed to the next postal congress, which has been adjourned to meet at Paris in the spring of 1878. The only propositions for changes submitted through the international office which have obtained the unanimous adhesion of all the postal union administrations were as follows:

Article XVIII of the Regulations for the execution of the Berne treaty, relating to statistics of transit, has been modified in certain of its stipulations by adopting a proposition of the postal administration of Germany, formulated as follows:

1st. The statistics from the 1st to 7th August, 1875, shall serve as basis for the accounts from 1st July to 31st December, 1875.

2d. The annual statistics fixed for the 1st December shall not be made in 1875.

3d. The subsequent statements shall be taken from the 1st to 7th June, 1876, and from the 1st to 7th December, 1876.

The results of these statements shall be valid from the 1st of January.

An additional provision, formulated as follows, has also been adopted by a unanimous vote of the postal union administrations:

The territorial transit expenses within the district of the union, of the mails destined for or coming from countries beyond the sea, foreign to the union, shall be calculated according to the statement of weight serving to establish the maritime transit expenses of such mails.

A postal convention has been concluded with the colony of Queensland, Australia, establishing an exchange of correspondence with that colony by means of the colonial contract mail-packets, plying between San Francisco and the colonies. This convention, a copy of which is appended, was carried into operation the 1st of January, 1876.

An additional postal agreement with the empire of Japan, modifying the provisions of the postal convention with that country, and reducing postage rates to the basis established with the postal-union countries was concluded on the 8th of February, and carried into operation on the 1st of April, 1876. A copy is appended.

A postal convention has been concluded with the British colony of Bermuda on the basis of postal-union rates. This convention, a copy of which is annexed, was carried into operation on the 1st of October, 1876.

An additional agreement has been concluded with Newfoundland, reducing the single prepaid letter-rate of postage between the United States and that colony to 5 cents; a copy of which is appended.

Negotiations are also pending for postal conventions with Peru, Victoria, and Chili. That with Chili has been formally executed with the Chilian minister, at Washington, and sent to Santiago for ratification by the Chilian government. It will be carried into operation on the 1st of January next, should the notice of its ratification be received previous to that date.

APPOINTMENTS.

The report of the appointment-office shows the following:

Number of post-offices established during the year	1,993
Number discontinued	1,157
Increase	836
Number in operation June 30, 1875	35,547
Number in operation June 30, 1876	36,383
Number filled by appointments of the President	1,568
Number filled by appointments of the Postmaster-General	34,815

Appointments were made during the year—

On resignations and commissions expired	5,140
On removals	1,045
On changes of names and sites	251
On deaths of postmasters	333
On establishment of new offices	1,993
Total appointments	8,762
Number of cases acted on during the year	10,114

The number and aggregate compensation of special agents, route agents, mail-route messengers, railway post-office clerks, and local agents in service during the year ended June 30, 1876, were—

	*43 special agents	$142,061 92
	1,042 railway post-office clerks	1,278,340 00
	1,017 route-agents	975,280 00
	219 mail-route messengers	145,610 00
	137 local agents	104,910 00
2,458	Total	2,646,201 92

The following table shows the number of employés in the Post-Office Department; also the number of postmasters, contractors, clerks in pos -offices, route-agents, railway post-office clerks, and other officers in service June 30, 1875, and June 30, 1876, respectively:

Departmental officers and employés:	1875.	1876.
Postmaster-General	1	1
Assistant Postmaster-General	3	3
Superintendent of foreign mails	1	1
Superintendent of money-order system	1	1
Chief clerk to the Postmaster-General	1	1
Chief of division of dead-letters	1	1
Chief of division of depredation	1	1
Chief of division of postage-stamps, stamped envelopes, and postal cards	1	1
Topographer for Department	1	1
Chief clerks of bureaus	5	5
Disbursing officer and superintendent of building	1	1
Stenographer		1
Clerks, messengers, watchmen, &c	367	363
	384	381
Other officers and agents:		
Postmasters	35,547	36,383
Contractors	6,280	6,126
Clerks in post-offices	4,467	4,718
Letter-carriers	2,195	2,269
Route-agents	987	1,017
Railway post-office clerks	901	1,042
Mail-route messengers	225	219
Local agents	125	137
Special agents	66	62
Total in service	51,177	52,354

FREE DELIVERY.

No additions to the number of free-delivery offices were made during the year. The service was, however, improved in several of the cities by establishing branch offices and extending the carriers' delivery. Two branch offices were established in Cleveland in place of two small offices, one in Brooklyn, and two in Philadelphia.

*Other special agents charged to separate appropriations.

A centennial branch of the Philadelphia post-office, fitted up in excellent style and complete in all its appointments, was located in the Government building in the exhibition grounds for the accommodation of the foreign and domestic officials and exhibitors and the large numbers of persons in daily attendance on the exhibition. It was equipped with all the requisites and conveniences of a first-class post-office, with letter-boxes for the reception of mail-matter located at all the principal points in the exhibition buildings and grounds, and, with its corps of ten letter-carriers, supplied every practicable facility to the officials, exhibitors, and visitors for the frequent and prompt collection, transmission, and delivery of their correspondence. As the business of this branch office was chiefly transacted in the current fiscal year, a detailed statement of its operations is reserved for the next annual report.

The general results of the service during the year are satisfactory. The postage on local matter exceeded the entire expense by $84,375.22.

The increase in the cost of the service was but 5 per cent., while the increase in the postage on local matter was 6 per cent. The average cost per piece of handling the matter was 3.13 mills. The aggregate results for the fiscal year ending June 30, 1876, were as follows:

		Increase over preceding year.
Number of officers	87	.....
Number of letter-carriers	2,269	74
Mail-letters delivered	189,659,443	10,575,975
Mail postal cards delivered	23,952,381	5,638,816
Local letters delivered	53,773,953	4,934,716
Local postal cards delivered	19,963,290	3,937,078
Registered letters delivered*	1,069,698	.....
Newspapers delivered	80,675,040	12,220,564
Letters collected	200,280,079	12,329,438
Postal cards collected	33,950,503	5,747,035
Newspapers collected	28,453,086	1,122,679
Whole number of pieces handled	631,777,473	57,575,999
Pieces handled per carrier	278,438	16,843
Total cost of service	$1,981,186.51	$101,144.52 or 5 per cent.
Average cost per piece in mills †	3.13	.....
Average cost per carrier †	$871.08	.....
Amount of postage on local matter	$2,065,561.73	$118,002.19 or 6 per cent.
Excess of postage on local matter over the total cost of service	$84,375.22	.....

In consequence of the reduction made by Congress at its last session in the appropriations for the free-delivery service, I was compelled to further reduce the salaries paid to the hard-worked and faithful letter-carriers in cities where the free-delivery system has been established.

A tabular statement, marked A, exhibiting in detail the operations of the free-delivery service for the past fiscal year, will be found in the appendix.

* Not reported last year.

† Based on the aggregate ($1,976,486.85) paid carriers, including incidental expenses at the several offices.

POSTAL MONEY-ORDER SYSTEM.

At the close of the fiscal ended June 30, 1875, the number of domestic money-order offices was 3,401. The number of new offices established during the following year was 305, and the number discontinued was 9, making a total of 3,697 offices in operation June 30, 1876.

During the last fiscal year 4,998,600 domestic money-orders were issued, whose aggregate value was $77,035,972.78. The number of such orders paid was 4,947,685, amounting in value to $76,632,571.45. To the total amount of orders paid is to be added $473,767.40, the amount of orders repaid to remitters, making the total payments $77,106,338.85, and the excess of the payments over the issues $70,366.07.

The total amount of fees received by postmasters for the issue of domestic money-orders was $645,699.40.

The foregoing statement of the year's transactions, when compared with that of the preceding year, shows a decrease of $395,277.80, or one-half of one per cent., in the amount of orders issued; a decrease ot $232,782.30, or three-tenths of one per cent., in the amount of orders paid, and a *gain* of $152,687.96, or 31 per cent., in the amount of fees received.

The past fiscal year is the first, since the establishment of the money-order system, in which there has been a decrease in the number or amount of domestic money-orders issued or paid. This decrease is believed to have been caused, for the most part, by the continuance of the financial depression which affected unfavorably to so great an extent the use of the money-order system, in the direction of its employment for business purposes, during the preceding year.

The average amount for which domestic money-orders were issued during the year was $15.41, being 6 cents less than the average of the previous year.

The total number of duplicate money-orders issued was 17,451, of which 37 were afterward canceled, leaving 17,414 as the number actually used, being a decrease of 3,276, or 16 per cent., during the year. Of this number 17,114 were issued in lieu of money-orders lost in the mails, or which, by reason of imperfect address or from some unknown cause, had failed to reach the payee in due time; 181 were issued in lieu of money-orders alleged to have been lost by the remitters or payees; 13 were issued to the remitters in lieu of money-orders, payment of which had been prohibited, in pursuance of the provisions of section 3929 of the Revised Statutes of the United States, because drawn in favor of the proprietors or agents of fraudulent lotteries, gift-enterprises, or other "schemes or devices for obtaining money through the mails by means of false or fraudulent pretenses, representations, or promises;" 69 were in lieu of orders which had become invalid because not presented for payment within one year after the date of their issue; 7 were in lieu of orders invalidated by reason of their having received more than one indorsement, and 30 in lieu of orders burned in the mails.

The Auditor has reported the following statement, showing the revenue which accrued on domestic money-order transactions for the fiscal year ended June 30, 1876:

Fees received on domestic money-orders issued		$645,699 40
Premiums, &c., received		1,322 12
Total		647,021 52
Commissions and clerk-hire	$420,487 42	
Incidental expenses	30,800 09	
Lost remittances	4,960 64	
Bad debts	2 53	
Net revenue	190,770 84	
		647,021 52

This amount of revenue is $70,628.75 greater than that of the previous year, being a gain of nearly 59 per cent.

In compliance with the provisions of the act of March 3, 1875, the increased schedule of fees for the issue of domestic money-orders went into effect on the first day of the following July. By this act, the fee on each order not exceeding $10, and on each order over $15 and not exceeding $20, was made 5 cents greater than the fee previously charged for the issue of orders of the same class. When the passage of this act was recommended, it was believed that the proposed increase would yield a gross annual revenue equal to the entire amount of expenditures of all kinds incurred on account of the money-order system, including the cost of Department clerical labor, printing blanks and stationery, now, as heretofore, paid out of the general appropriations. The result of the first year's experience under the operation of the act above referred to has been an increase of $152,687.96, or 31 per cent., in the amount of fees received for the issue of domestic money-orders, notwithstanding the falling off of one-half of one per cent. in the amount of the orders; yet that the purchase of money-orders for small amounts has not been, to any appreciable extent, unfavorably affected by the increase of the fee is shown by the trivial decrease of 6 cents in the average amount for which money-orders were issued during the year. The items of expense paid out of general appropriations were, the salaries of the Superintendent's Office, $34,776.57; the salaries in the Auditor's Office, $94,500; books, blanks, and printing, furnished by the Congressional Printer, for the money-order system, $54,169.36; and blanks, books, and stationery, not included in the last item, estimated at $5,000, being a total of $188,445.93, or $2,324.91 less than the amount of the net revenue reported by the Auditor as having accrued from the transaction of the domestic money-order business at post-offices throughout the country. To this surplus of net revenue from the domestic money-order business of $2,324.91 should be added an amount of not less than $10,000, being the estimated net proceeds of the money-order business with foreign countries during the last year, not yet ascertained by the Auditor.

Certain of the larger offices are designated as "money-order offices of the first class," or depositories for surplus money-order funds, which accumulate from time to time at offices which issue money-orders to a greater amount than they pay. Postmasters who are unable to procure drafts of national banks by means of which to remit their surplus funds to some designated office of the first class for deposit, are instructed to forward such funds through the mail in registered letters. The sum of $54,285,551.15 of surplus funds was deposited with the postmasters of offices of the first class during the year. Nearly the whole of this amount was transmitted through the mails. Sixty-nine cases of remittances of surplus funds reported as lost, amounting to $12,704.61, were under investigation during the same period. Forty-one of these, amounting to $7,875.61, were reported as pending at the close of the previous fiscal year; four, amounting to $306, occurred during that year, but were not brought to the knowledge of the Department until after the publication of the last annual report; and twenty-four, amounting to $4,523, occurred within the year. In 25.43 of these cases, the amount, $5,410.64, was allowed to the postmasters by whom the remittances were made, as the losses were found to have occurred without their fault; in 19.57 cases the amount, $2,780.97, was recovered by special agents; and 24 cases, amounting to $4,963, were unsettled at the close of the fiscal year.

The amount of money-orders paid by certain offices is, either continuously or occasionally, greater than the amount of the orders issued by them. To enable such offices, east of the Rocky Mountains, to pay without delay the orders drawn upon them, credits with the postmaster at New York, to a definite amount in each case, are allowed, and a limited supply of blank drafts are furnished, to be drawn against such credits as the exigencies of their business may demand. The postmaster at New York has paid drafts of this class amounting to $6,803,014.67 during the year. Postmasters in the States of the Pacific coast have been furnished with funds to the amount of $66,337 by the postmaster at San Francisco, Cal., and to the amount of $40,582 by the postmaster at Portland, Oreg., to meet similar exigencies of the service in those States.

Out of the total number of domestic money-orders paid during the year, the payment of forty-two, amounting to $1,083.97, was alleged to have been made to persons fraudulently representing themselves to be the payees, or their indorsees or agents, and who obtained payment by forging the signatures of such payees or indorsees, or by other improper or unlawful means, being at the rate of one reported erroneous payment in 117,802. Seventy-seven claims for re-imbursement, growing out of such alleged erroneous payment, amounting to $2,122.20, were under investigation during the year, twenty of which, amounting to $654.24, were reported as pending at the close of the previous year; seven, amounting to $164.78, occurred before June 30, 1875, but were inadvert-

ently omitted from the last annual report; eight, amounting to $219.21, occurred previously to that time, but failed to be brought to the knowledge of the Department until after the publication of the last report; and forty-two, amounting to $1,083.97, as hereinbefore stated, occurred during the year. In four of these cases the amount, $75.45, was ascertained to have been paid to the rightful owner; in one the amount, $35.06, was charged against the remitter; in five the amount, $108.71, was charged against the payees; in fifteen cases, amounting to $269.10, the money was refunded by the paying postmasters through whose negligence the losses occurred; in ten the loss, amounting to $415.44, was assumed by the Department; in ten the amount, $225.78, was recovered by special agents from the persons by whom the forgeries had been committed; and thirty-two cases, amounting to $992.66, are still unsettled.

The number of offices authorized to issue money-orders payable in Switzerland, and to pay orders drawn in that country, was 174 on the 30th day of June, 1875. Within the last fiscal year 6 offices have been added to the list and 1 discontinued, leaving 179 in operation at its close. The number of Swiss money-orders issued in the United States was 3,457, amounting to $83,256.62, and the number paid was 1,493, amounting to $38,394.29. This amount of business, compared with that of the previous year, exhibits an increase of $14,708.57, or 21.46 per cent. in the issues, and $9,258.51, or 31.78 per cent. in the payments. The fees received amounted to $2,347.25.

The number of offices authorized to issue money-orders payable in the United Kingdom of Great Britain and Ireland, and to pay orders drawn in that country, was 993 on June 30, 1875. During the year 25 offices were added to the list and 5 discontinued, leaving 1,013 in operation at its close. These offices issued 59,083 British money-orders, amounting to $1,018,355.15, and paid 20,586, amounting to $372,288.63. In comparison with the business of the preceding year, these transactions show a decrease of $131,027, or 11.40 per cent., in the issues, and an increase of $47,745.83, or 14.71 per cent., in the payments. The fees received amounted to $31,256.10.

The number of offices authorized to issue money-orders payable in the German Empire, and to pay orders drawn in that country, was, on the 30th of June, 1875, 604. During the year 30 have been added to the list and 3 discontinued, leaving 631 in operation at its close. The whole number of German money-orders issued was 38,174, amounting to $780,060.52, and the number paid was 28,879, amounting to $729,672.66, showing, in comparison with the transactions of the previous year, a gain of $33,415.98, or 4.48 per cent. in the issues, and $108,915.90, or 17.54 per cent. in the payments. The fees received amounted to $21,448.10.

On August 2, 1875, the exchange of money-orders between the United States and the Dominion of Canada was commenced under the provisions of the postal convention of June 8, 1875, referred to in the last

annual report. During the year 316 offices were authorized to issue money-orders for payment in the Dominion, and to pay orders drawn in that country. In the eleven months in which the business was in operation 8,695 Canadian money-orders, amounting to $186,995.74, were issued, and 11,783, amounting to $232,625.57, were paid. The fees received amounted to $4,284.85. An arrangement was also made during the year by which money-orders are issued through the Canadian post-office department payable in the province of Nova Scotia, and by the same means orders issued in that province are paid in the United States.

The gross number of domestic and international money-orders issued during the year was 5,108,009, amounting to $79,104,640,81, and the gross number paid was 5,010,426, amounting to $78,005,552.60.

The Auditor is unable at present to furnish an exact statement of the revenue of the last fiscal year from the exchange of money-orders with the foreign countries with which money-order conventions are in force, as a final adjustment of the accounts of the last quarter of that year, to be made by him and the proper accounting officers of those countries, has not been reached. The revenue of the previous year derived from the Swiss business was stated in the last annual report, viz, $679.11; that from the British business for that year is reported by the Auditor at $833.59, and from the German business at $7,816.47.

MISCELLANEOUS.

SALARIES OF POSTMASTERS.

I renew the recommendation of my predecessor in his last annual report for a change in the basis of adjusting the salaries of postmasters at fourth-class offices. Prior to July 1, 1874, the salaries were based mainly upon the amount of stamps canceled; but since then, by acts of June 23, 1874, and July 12, 1876, commissions have been allowed on the revenues, which are derived mostly from the sale of stamps. That the change was not correct in principle must be apparent upon reflection, and that it has not been advantageous to the Department is demonstrated by experience. The old plan was the more equitable one, for the reason that the stamps canceled in a post-office represent the amount of labor performed in handling matter for mailing, while the sale of stamps is no test of the work required of the postmaster. Under that plan postmasters were required to render sworn statements of the amount of stamps canceled for a fixed period; and the sales of stamps shown in the quarterly accounts-current operated as a check upon these statements, as, under a legitimate mode of doing business, there must ordinarily be a near correspondence between the amount of stamps sold and the amount canceled. Under the present system, there is nothing in a postmaster's returns to detect improper sales. Stamps can be furnished him to the extent justified by his bond, and all that is required of him is to account for the proceeds. He is not obliged to state under oath or otherwise in

what manner or to whom he disposed of them. Practically, he has only the fear of removal, upon a chance discovery, to prevent him from traversing the country seeking purchasers, and offering such liberal discounts as his own large commissions will afford.

To show how great the inducement is, it need only be mentioned that the sales at an office must exceed $1,200 per annum before the commissions fall below 50 per cent.

Were the commissions uniform throughout, the matter would regulate itself, one postmaster's gain being another's loss; but graded as they are upon a scale, and stopping at a fixed point, the Government is a loser whenever stamps are sold by the postmaster of a small office within the delivery of a larger one. Naturally the abuse is apt to be in this direction. Not only do the cities and large towns offer greater facilities for the sale or exchange of stamps, but in such places the chances of detection are greatly lessened. With the mutual interest for concealment between buyer and seller, detection is more likely to be the exception than the rule.

Stamps are used largely as a medium of exchange in lieu of currency, and many are the remittances made of them to the large cities in payment of small bills. Notably is this the case with newspaper subscriptions and orders for books, for which purposes they are very convenient and are often solicited. Not only do publishers in this way procure stamps sufficient for their postages, but they have not infrequently asked the Department to redeem a surplus. Postmasters, as a class, take the lead in getting up subscription clubs, and when using stamps for payment, have the double advantage of getting a commission from the publisher and one from the Government.

In many cases business men engaged in the large cities reside in country places on the lines of public travel, and it is only natural that, in their desire to serve a neighbor, they should purchase their stamps of the country postmaster for use in the city. It is not likely, however, that they would carry out their letters to be mailed at the country post-office.

Railroad, insurance, and express companies and other large corporations, who have many agents among the country postmasters, may obtain from this source the large amounts of stamps required for use at their city headquarters, and thus indirectly, but systematically, contribute to their own revenues. And traveling commercial agents may realize a handsome profit by purchasing stamps at a large discount from country postmasters, perhaps in exchange for goods, and reselling them in the cities at a smaller discount.

I have before me a list of 50 offices, hastily selected, at which the aggregate compensation for the two years ending June 30, 1874, under the old law, was $12,126, and for the two years ending June 30, 1876, under the new law, $64,051.51, or an average of $242.52 to each office under the former, and of $1,281.03 under the latter, and an average in-

crease of $1,038.51, or 428 + per cent. Nearly all of these offices, which are but representatives of their kind, are located in close proximity to some city, and from what has already been explained, the reasons for such a large increase will be readily apparent.

It has been frequently found that an outgoing postmaster has neglected or refused to turn over to his successor the stamps remaining in his hands, preferring to account for them as sold, and thus getting the commissions allowed by law. By afterward selling the stamps to the public he would actually receive the emoluments of the office while the new postmaster was doing the work.

There is ample evidence in the Department to establish the prevalence of the abuse in all the various forms that have been suggested.

It is evident that if the abuse is to be prevented or checked to any extent, it must be through the supply of stamps; but that is a matter difficult to regulate, it being impossible for the Department to know the precise relative wants of the 36,000 or more communities, represented by as many post-offices, throughout the United States. To withhold supplies pending investigations is to incommode the public, bring the Department into discredit, and in some degree to impair its revenues. It is at least unfortunate that the present law forces upon the Department a conservative policy in the supply of stamps—a policy that is justified by no law of business. The issue and sale of stamps should be encouraged to the fullest possible extent. I deeply regret the necessity of an existing general order circumscribing sales; and although removals have followed well-authenticated violations of this order, the evil seems to be increasing rather than diminishing.

Now as to financial results: During the two years ending June 30, 1874—the period covered by the last biennial re-adjustment under the old law—it required 27.5 per cent. of the sales of stamps to the public to pay the compensation of postmasters; and for the ensuing two years, ending June 30, 1876, under the new law, it required 29.43 per cent. of the sales to pay the compensation. This latter ratio would have been much larger had it not been for the change which took effect on the 1st of January, 1875, in the mode of collecting postage on second-class matter. Prior to that date it was collected in money at the offices of delivery, and under the old law postmasters were allowed 50 per cent. of the amount in the way of compensation; but since then it has been prepaid at the mailing-offices with special adhesive stamps. The offices of delivery are generally the smaller or fourth class offices, and the mailing-offices, at places of publication, are mainly those of the first, second, and third classes, subject to presidential appointment, and at which there had previously been assigned annual salaries, at a fixed amount, for the two years commencing July 1, 1874. The change thus deprived the smaller offices of the commissions on second-class matter, without benefiting the larger ones, and had the double effect of decreasing the *compensation* of postmasters and of increasing the sales of stamps.

To show what a considerable item this is, it need only be mentioned that the amount of postage collected on second-class matter during the last fiscal year was $1,014,154.27.

In further support of the argument advanced, it may be stated that for the six months ending December 31, 1874, before the change with reference to second-class matter went into effect, it took 31.13 per cent. of the sales of stamps to pay the compensation of postmasters. This was at the very commencement of the new salary law, and before postmasters had fairly learned how to take advantage of it.

In view of the facts, I urgently recommend that the compensation of postmasters of the fourth class be based upon the business of their respective offices, as ascertained from sworn returns to the Auditor of stamps canceled.

STRAW-BIDS.

During the last fiscal year the loss and annoyance to the Department occasioned by the vicious system of "straw-bids" almost wholly disappeared. In all cases of failure by bidders to execute contracts under the law, and by contractors to perform service in accordance with their contracts, suits were promptly commenced on their bonds and pressed to final judgment. The number of failures was less than in any other year for a long period of time past, and the loss to the Department resulting therefrom was considerably decreased. In fact, it may be stated that the failures were no greater in number or amount than would naturally occur under the most stringent law that could be enacted.

By the aid of the law passed at the late session of Congress requiring the sureties on the bonds of bidders to make sworn statements, specifying the location, place of record, and probable value, above incumbrances, of the real estate owned by them, and imposing penalties for making false statements, I am confident the Department will be fully protected against worthless bids; and the other provisions of the law which direct the Postmaster-General, in case a bidder fails to enter into contract or to commence performance of service, to contract with any person, whether a bidder or not, who will perform the service at the lowest price, amply fortify him in his efforts to break up a practice by which the "star service" has so long been at the mercy of combinations formed for corrupt and fraudulent purposes. The complete eradication of the practice can only be prevented by his failure to exercise the authority with which he is clothed.

REDUCTION OF PAY TO RAILROADS.

The cost of inland mail-transportation by railroad was so materially changed by the legislation of Congress, at its last session, that I deem it proper to call attention to it, although it does not belong to a report of the operations of this Department during the last fiscal year.

By the act of July 12, 1876, providing appropriations for the service

of the Post-Office Department for the fiscal year ending June 30, 1877, a reduction of ten per centum, to take effect July 1, 1876, was required from the pay of railroad companies for carrying the mails. At that date the cost of such service (most of it adjusted under the provisions of the act of March 3, 1873, a portion, however, only estimated) was $9,757,546. A further reduction of 20 per centum was also provided for by the act of July, 1876, from the compensation of certain railroad companies whose roads were built, in whole or in part, by the aid of land-grants authorized by congressional legislation.

At the date of the approval of said act a number of railroad companies were under contract, duly executed in accordance with law, to carry the mails during a period not then expired, at a rate of compensation which had been fixed by the provisions of the act of March 3, 1873. Some of these companies raised the question as to whether the reduction required by the subsequent law could be legally made from their pay during the period of their contracts, which question was referred to the Assistant Attorney-General for the Post-Office Department, who decided that they were not affected by it. This question was, however, subsequently submitted to the Attorney-General, whose opinion has not yet been rendered.

The act of March 3, 1873, also fixed a separate compensation for the use of post-office cars furnished by the companies over whose lines the railway-distribution system had been or might be established, and the question was raised as to whether the 10 per cent. reduction subsequently provided for by the act of July, 1876, applied to such compensation. It was held that it did not.

The pay of railroad companies under contract (which, under the opinion of the Assistant Attorney-General for the Post-Office Department, as stated above, were not affected by recent legislation) amounted in the aggregate to $2,495,646, leaving the sum of $7,261,870, representing, at that date, the pay of the companies not under contract. The 10 per cent. reduction, amounting to $726,187, applied to them. A further reduction of $260,714 was made from the pay of "land-grant railroads," so that the cost of this service, by the operation of the act of last July, was, on the 1st day of July, 1876, decreased in the sum of $986,901.

WITHDRAWAL OF FAST-MAIL TRAINS.

The reduction thus provided for was met on some of the great trunk-lines by the withdrawal of the fast mail which had been previously established. Over the New York Central and Hudson River, and the Lake Shore and Michigan Southern Railroads, an exclusive mail-train, composed of finely equipped postal cars, which were provided with all the conveniences necessary to rapid and perfect distribution, was, for a few months, run between New York and Chicago, on a schedule time of twenty-six hours between those cities; and over the Pennsylvania Railroad and its connecting lines a limited mail-train, with superior ac-

commodations, was run between New York, Cincinnati, Indianapolis, and Saint Louis; the time occupied between New York and Cincinnati, via Philadelphia, Harrisburgh, and Columbus, being twenty-four hours, between New York and Indianapolis, twenty-six hours, and between New York and Saint Louis thirty-three hours. These lines afforded facilities for the transmission of mails from the great commercial center of the East to all points in the West and Southwest, hitherto unknown in the history of railway transportation in this country, and enabled the Department to so completely meet the demands upon it for speedy transportation that the most sanguine expectations of the business communities dependent upon them for postal supplies were more than realized.

It was claimed by the railroad companies at the organization of this expedited distribution system that the rates of pay then provided by existing law were insufficient to compensate them for the extraordinary expense incurred in running trains at such a speed, and there is good reason to believe that they offered their trains to the Department as an experiment, out of a spirit of enterprise, rather than an expectation of deriving immediate profit therefrom.

Serious embarrassments have resulted from a discontinuance of these fast lines, which have been augmented by the refusal of the railroad companies to re-establish the incomplete accommodations they had previously furnished. The mails are now conveyed between the Atlantic seaboard and points in the West and Southwest with less dispatch, and with smaller facilities for distribution, than were provided before the inauguration of the fast-mail system. To be thus compelled to go backward in the work of insuring speedy transmission and perfect delivery of the important business correspondence of the country is a source of mortification to all the officers of this Department whose duties are connected with mail-transportation. Instead of retrograding, the mail system ought to soon attain such perfection as to insure the transportation of letters, and all other matter not too bulky, from one important point to another within the time required to convey passengers between the same points over the speediest lines of communication.

The law of Congress which required a reduction in the pay of railroad companies for carrying the mails, also authorized the appointment of a commission of three skilled and competent persons to investigate the whole subject of mail-transportation by railroad, with a view to making their report the basis of future legislation. The three gentlemen designated by you for that mission entered on their work about the first of last August, since which time they have visited all the large cities and important railroad centers of the United States, and conferred with the managers of the leading railroad lines, and also with intelligent men, representing the main business interests at each point. They seem to have been patient and impartial in collecting information, which will, no doubt, throw much light on the difficult question of determining the proper mode of compensating railroad companies for carrying the mails, and the rates of pay which ought to be fixed for this service.

I have carefully avoided any expression of opinion, the presentation of any theory, or the tender of any advice, which could, in the most remote manner, influence the judgment of this commission; but I can now, with entire propriety, recommend that whatever legislation may result from their investigations shall definitely prescribe fixed rates of mail pay for this service, leaving nothing open to the descretion of the Postmaster-General; and that the execution of written contracts by railroad companies shall be required as a condition of payment for the service which they perform. Less than one-fifth of the railroad service of the country has been, as a general rule, covered by written contracts, and innumerable complaints, misconstructions, and difficulties have grown out of this loose way of doing a business which annually amounts to millions of dollars.

INTERFERENCE WITH POSTAL OFFICERS AND EMPLOYÉS.

Indefinite information has occasionally been communicated to this Department of the threatened violence to persons employed by it in some of the States because of their political opinions and party associations. A few postmasters in the Southern States have expressed great apprehension of their personal safety on account of their connection with the postal service, and have specially requested that their reports of apprehended danger should not be made public, lest it should result in the loss of their lives. But no positive testimony of actual interference with such officers or employés while in the discharge of their official duties has been submitted, except in the case of a mail-messenger at Spartanburgh, in the State of South Carolina, who reported through one of the officers of the Department that he had been violently driven away while in charge of the mails, on account of his "political affiliations." The representations of this messenger were referred to an assistant superintendent of the railway mail-service for confirmation of their correctness, who responded that the messenger had disappeared from his post of duty, leaving his work to be performed by a substitute.

What the "affiliations" of this employé were, does not appear from his statement or that of the officer who investigated the case, but the fact of his having been improperly interrupted in the performance of his duties seems to have been corroborated by his disappearance immediately thereafter. I refer to this case because, in my judgment, it is sufficiently suggestive to justify me in recommending that a more severe punishment should be provided for the offense of assaulting any person in charge of the mails, or of retarding or otherwise obstructing them by threats of personal injury.

TRANSIT CHARGES ON BRITISH CLOSED MAILS.

A special arrangement has been concluded with the general post-office of the United Kingdom of Great Britain and Ireland, a copy of which is appended, fixing the rates of territorial transit charges on the British

closed mails conveyed across the American continent between Boston or New York and San Francisco at 6 francs per kilogram of letters, and 2 francs per kilogram of newspapers, other printed matter and patterns, and samples of merchandise. The British and Australian mails which are now forwarded by the way of the United States are of great bulk and weight, averaging about 12 tons per month; and as the transit charges thereon, accounted for under the provisions of the postal convention of November 7–24, 1868, were wholly insufficient to defray the actual cost to this Department of their transportation by rail between New York and San Francisco, it became necessary, in order to save the revenues of this Department from the heavy losses incurred on account of their transmission across our territory, to increase these transit charges to the amounts agreed upon in this arrangement.

POSTAL DEFICIENCIES.

A very gratifying result is presented in the fact that the deficiency of this Department during the last fiscal year was reduced to $4,081,790.18, as against $6,169,938.88 of the preceding year. The difference can be traced to the large increase in its ordinary receipts, (which greatly exceeded the estimates therefor,) and a slight decrease in its expenditures. The growth of the service in all of its branches, as will be seen by reference to the tables in the appendix, has substantially kept pace with the increase of former years. The additional miles of service established equal or exceed the number added during any one year for several years past; the decrease in the proportional cost thereof having resulted from the low rates at which the new service put into operation at the commencement of the fiscal year was let. The bids on nearly all the routes were lower than they had ranged for similar service for many preceding years, and the rigid enforcement of the law against the few bidders and contractors who failed had the effect to induce others to execute their obligations.

It will be instructive to study the variance in the percentage of increase and decrease in the receipts, expenditures, and deficiencies of the postal service for the last seven years. Its ordinary revenues have advanced beyond its expenses, as will more satisfactorily appear from the figures given below:

The ordinary receipts for the year ended June 30, 1876, were	$28,644,197 50
For the year ended June 30, 1869, they amounted to	18,344,510 72
Showing an increase of	10,299,686 78

It will thus be seen that in seven years the receipts have increased 56.14 per cent., or at an average of over 8 per cent. per year.

For the same years the expenditures were as follows:

For the year ended June 30, 1876	$33,263,487 58
For the year ended June 30, 1869	23,698,131 50
Showing an increase of	9,565,356 08

The increase in the expenditures for the entire period is 40.38 per cent., or at an average rate of about 5.50 per cent. per year.

For the same years the deficiency in the revenues were as follows:

For the year ended June 30, 1876	$4,619,290 08
For the year ended June 30, 1869	5,353,620 78
Showing a decrease of deficiency of	734,330 70

A decrease of deficiency of 13.71 per cent., or at an average rate of nearly 2 per cent. per annum.

If a corresponding ratio of percentage in receipts and expenditures shall be steadily maintained in future years, there is reason to believe the postal service will cease to be a burden on the general treasury. It cannot, however, be speedily brought to a self-sustaining basis; it must reach that point by slow marches, with the aid of wise administration and judicious economy. Whatever theories may be advanced to relieve it of chronic deficiencies, they must yield to the ever-present necessity of supplying abundant mails for the whole country by liberal appropriations and reasonable expenditures. The public would condemn the experiment of higher rates of postage in the attempt to acquire greater revenues, and the experiment itself would fail of its object; while a limited and stinted service would provoke criticism and general complaint. It is apparent, therefore, that such revenues as are essential to make the Department self-supporting cannot be obtained from increased rates of postage; they can only come from active, intelligent, and prosperous communities, evenly and thickly scattered over the several States and Territories. Extravagant outlays, even for frequent mails, would not challenge public approval, but no condemnation would follow wise expenditures for rapid, safe, and frequent mail communication between our widely-separated sections of country. The fact that in only seven of the States and two Territories the receipts equal the expenditures, is sufficient to show that a long time must elapse before the remainder will be able to bear their share of a self-sustaining service. So long as the Post-Office Department must follow the pioneer to the remotest settlements, and put him in communication with the centers of trade and business, and also carry the mails to towns and cities in the first years of their existence as frequently as they are conveyed to those of larger population and more matured growth, so long the general treasury will probably have to bear a part of the cost. When our new States and Territories shall become more populous, and our inexhaustible resources more generally developed, the earnings of the Department will be more than sufficient to defray its expenses.

Very respectfully, your obedient servant,

JAS. N. TYNER,
Postmaster-General.

The PRESIDENT.

APPENDIX.

No. 1.—Estimates for expenditures for the fiscal year ending June 30, 1878.

Office of the Postmaster-General:		
Mail depredations and special agents	$160,000 00	
Advertising	92,500 00	
Preparation and publication of post-route maps	30,000 00	
Miscellaneous items in the office of the Postmaster-General	1,500 00	
Total		$284,000 00
Under First Assistant Postmaster-General:		
Compensation to postmasters	7,500,000 00	
Clerks in post-offices	3,700,000 00	
Letter-carriers	2,100,000 00	
Wrapping-paper	25,000 00	
Twine	55,000 00	
Marking and rating stamps	10,000 00	
Letter-balances and scales	6,000 00	
Rent, fuel, and light	450,000 00	
Office-furniture	30,000 00	
Stationery	55,000 00	
Miscellaneous and incidental items	145,000 00	
Total		14,076,000 00
Under the Second Assistant Postmaster-General:		
Inland transportation, railroad	10,230,745 00	
Inland transportation, other than railroad	6,237,993 00	
Railway post-office clerks	1,355,040 00	
Route-agents	1,071,000 00	
Mail-route messengers	161,175 00	
Local agents	114,450 00	
Mail-messengers	704,025 00	
Mail locks and keys	20,000 00	
Mail-bags and mail-bag catchers	225,000 00	
Total		20,119,428 00
Under the Third Assistant Postmaster-General:		
Postage-stamps	150,747 48	
Expenses of agency	8,100 00	
Stamped envelopes and newspaper-wrappers	616,635 39	
Expenses of agency	16,300 00	
Postal cards	303,771 56	
Expenses of agency	7,300 00	
Registered-package envelopes, locks, and seals	40,000 00	
Post-office and dead-letter envelopes	42,150 00	
Ship, steamboat, and way letters	7,500 00	
Engraving, printing, and binding drafts and warrants	1,500 00	
Total		1,194,004 43
Under the Superintendent of Foreign Mails:		
Transportation of foreign mails	250,000 00	
Balance due foreign countries, including the United States portion of the expense of the international office organized under the provisions of article 15 of the general postal union treaty, concluded at Berne October 9, 1874	50,000 00	
Total		300,000 00
Official stamps and stamped envelopes for the use of the Post-Office Department during the year		750,000 00
Total estimated expenditures		36,723,432 43

Amount which will be provided by the Department from its own revenue accruing from postages and other sources, estimated	$30,645,165 00
Excess of expenditures to be provided for by appropriation out of the general Treasury	6,078,267 43

EDWARD W. BARBER,
Third Assistant Postmaster-General.

POST-OFFICE DEPARTMENT, APPOINTMENT OFFICE,
Washington, D. C., November 4, 1876.

SIR: Agreeably to your request, I submit herewith estimates of the appropriations necessary for the fiscal year ending June 30, 1878, under the following heads, viz:

For compensation to postmasters	$7,500,000
For clerks in post-offices	3,700,000
For letter-carriers	2,100,000
For wrapping-paper	25,000
For twine	55,000
For marking and rating stamps	10,000
For letter balances and scales	6,000
For rent, fuel, and light	450,000
For office-furniture	30,000
For stationery	55,000
For miscellaneous and incidental items	145,000
Making in the aggregate	14,076,000

These estimates are believed to be as low as the requirements of the service will permit, and, in the estimation of this office, leave but a very small margin out of which to provide for the constant demand in all parts of the country for increased postal facilities. In view of the limited appropriations for the present fiscal year, the Department has felt constrained to deny, from the necessities of the case, many extensions of the service which seemed in themselves both proper and reasonable; but the further continuance of this policy is believed to be unwise and detrimental to the best interests of any country whose development in other respects shows such marked and rapid progress as the United States.

Accompanying this is a tabular statement, marked "A," giving more definite information.

Yours, very respectfully,

JAMES H. MARR,
Acting First Assistant Postmaster-General.

Hon. E. W. BARBER,
Third Assistant Postmaster-General.

A.—*Statement showing the increase or decrease per centum, for the items named below, of the appropriations for the fiscal years ending June 30, 1876, and June 30, 1877, as compared with the estimates for the fiscal year ending June 30, 1878; also the increase or decrease per centum, for the same items, of the expenditures for the fiscal year ending June 30, 1876, as compared with the estimates for the fiscal year ending June 30, 1878.*

Items.	Appropriation for the fiscal year ended June 30, 1876.	Estimate for the fiscal year ending June 30, 1878.	Per centum of increase or decrease of estimates for 1877-1878 over appropriation for 1875-1876.		Appropriation for the fiscal year ending June 30, 1877.	Estimate for the fiscal year ending June 30, 1878.	Per centum of increase or decrease of estimate for 1877-1878 over appropriation for 1876-1877.		Expended during the fiscal year ended June 30, 1876.	Per centum of increase or decrease of estimate for 1877-1878 over expenditures for 1875-1876.	
			Increase.	Decrease.			Increase.	Decrease.		Increase.	Decrease.
For compensation to postmasters	$7,000,000	$7,500 000	7.14	.....	$7,000,000	$7,500,000	7.14	.....	$7,397,397 01	1.38	.....
For clerks in post-offices	3,500,000	3,700 000	5.71	.....	3,290,000	3,700,000	12.46	.....	3,480,730 15	6.29	.....
For letter-carriers	2,000,000	2,100,000	5.00	.....	1,900,000	2,100,000	10.52	.....	1,980,795 02	6.02	.....
For wrapping-paper	25,000	25,000	.....	.....	20,000	25,000	25.00	.....	18,207 02	37.3	.....
For twine	55,000	55,000	.....	.....	50,000	55,000	10.00	.....	38,918 29	15.62	.....
For marking and rating stamps	10,000	10,000	.....	.....	10,000	10,000	.....	.....	8,857 90	12.89	.....
For letter-balances and scales	3,000	6,000	100.00	.....	5,000	6,000	20.00	.....	3,906 39	53.39	.....
For rent, fuel, and light	500,000	450,000	.....	10.00	390,000	450,000	15.30	.....	390,422 77	15.25	.....
For office furniture	35,000	30,000	.....	16.66	20,000	30,000	50.00	.....	19,500 27	53.27	.....
For stationery	50,000	55,000	10.00	.....	50,000	55,000	10.00	.....	43,343 06	26.89	.....
For miscellaneous and incidental items	150,000	145,000	.....	3.44	75,000	145,000	93.33	.....	76,090 46	92.00	.....
Total	13,328,000	14,076,000	5.68	.....	12,810 000	14,076,000	9.87	.....	13,458,168 34	4.59	.....

POST-OFFICE DEPARTMENT,
OFFICE OF THE SECOND ASSISTANT POSTMASTER-GENERAL,
Washington, D. C., October 27, 1876.

SIR: At the close of the last fiscal year, June 30, 1876, the annual cost of inland mail transportation was as follows, viz:

On 912 railroad-routes, aggregating 72,348 miles in length	$9,543,134
On 88 steamboat-routes, aggregating 14,883 miles in length	606,465
On 8,003 other routes, designated as "star routes," aggregating 194,567 miles in length	5,051,541
Total cost	15,201,140

Compared with the state of the service at the close of the preceding year, the railroad-routes showed an increase of 41 in number, of 2,265 miles in aggregate length, and of $326,616 in annual cost; the steamboat-routes a decrease of 1 in number, of 905 miles in aggregate length, and of $77,665 in annual cost; and the "star routes" an increase of 680 in number and 2,565 miles in aggregate length, and a decrease of $402,180 in annual cost. Taken together, the increase in the number of routes was 720, and in the aggregate length 3,925 miles, and the decrease in annual cost $152,229.

By the act of July 12, 1876, making appropriations for the service of the Post-Office Department for the fiscal year ending June 30, 1877, the Postmaster-General is directed in the first section to reduce the compensation to be paid from and after July 1, 1876, for the transportation of mails on railroad-routes ten per centum from the rates fixed and allowed "on the basis of the average weight" by the first section of the act of March 3, 1873. And the thirteenth section of the act of July 12, 1876, provides "that railroad companies whose railroad was constructed in whole or in part by a land-grant made by Congress on the condition that the mails should be transported over their road at such price as Congress should by law direct shall receive only eighty per centum of the compensation authorized by this act." According to the advice of the law-officers of the Government, the ten per centum reduction is not applicable to the compensation for railroad mail-service performed under contracts made in due form of law, or to allowances for railway post-office cars, mail-messenger service, side service, or ferriage.

As above shown, the annual cost of mail transportation on railroad-routes at the close of the last fiscal year was $9,543,134. By the re-adjustment of the rates of pay under the act of March 3, 1873, on the basis of new returns of the amount and character of the service, on routes chiefly in States in which a new contract term began with the current fiscal year, the annual cost of the service from July 1, 1876, would have been $9,757,546. Of this amount the sum of $2,495,676 is not subject to the ten per cent. reduction ordered by the first section of the act of July 12, 1876, being composed of the items decided by the law-officers to be exempt, as above stated. The amount of the ten per cent. reduction cast on the remaining $7,261,870, is, therefore, $726,187.

The amount of pay subject to the reduction required by the thirteenth section of the act of July 12, 1876, is $1,303,572, composed of the compensation on land-grant roads, whether under contract or otherwise, the law-officers having advised that the contracts did not constitute a ground of exemption from the operation of the thirteenth section. The amount of the reduction under that section, therefore, is $260,714.

The reductions under the two sections amounting to $986,901, the cost of the service, after deducting this amount, is, for the first quarter of the current fiscal year, at the rate of $8,770,645 per annum.

The appropriation made by the act of July 12, 1876, for the year ending June 30, 1877, for transportation by railroad being	$9,100,000
And the present annual cost as reduced under the act	8,770,645
There remains for new service and for increase of cost by further re-adjustment for the year the sum of	329,355

This state of facts has but just been ascertained, the examination and decision of legal questions raised by the new legislation embodied in the act of July 12, 1876, as well as the numerous and complex calculations which it rendered necessary, having caused delay. The determination to decline establishing new railroad-service, adopted while the means of defraying increased expense were not apparent, may now be relaxed.

Estimates of the amounts of money necessary to be appropriated for inland-mail transportation and items incident thereto for the fiscal year ending June 30, 1878, are presented herewith, in tabular form. Following the form of the appropriation for the present year, separate estimates are made for transportation by railroad and by routes other than railroad. The table shows the cost for 1875 and 1876, and the appropriation for 1877, with the per centum increase and decrease of cost for 1876 compared with that for 1875, and of the appropriation for 1877 compared with the cost for 1876. The increase of the cost of railroad transportation for 1876 over 1875 is 3.54 per cent.; and the decrease of the appropriation for the same purpose for 1877, compared with the cost for 1876, is 4.64 per cent. The cost for 1877, at the rate of increase for 1876 over 1875, 3.54 per cent., apart from the reductions ordered by act of July 12, 1876, would be $9,880,960. The estimate for 1878 is set down, at the same rate of increase, at $10,230,745, the reductions ordered by the recent act being regarded as temporary, inasmuch as the act itself authorizes the appointment of a commission to "examine into the subject of transportation of the mails by railroad companies and report to Congress at the commencement of its next session such rules and regulations for such transportation and rates of compensation therefor as shall in their opinion be just and expedient, and enable the Department to fulfill the required and necessary service for the public."

The cost of transportation on other than railroad-routes for 1876 was $5,658,006. Estimating the cost for 1877 at an increase of 5 per cent., the amount would be $5,940,946. At the same rate of increase, the estimate for 1878 is set down at $6,237,993. This is deemed sufficient for the probable requirements of the service, though the sum is $499,858 less than the appropriation for the current year.

Uniting the amounts named for railroad routes, $10,230,745, and for routes other than railroad, $6,237,993, the aggregate estimate for inland transportation for 1878 is $16,468,738, less, by $1,079,262, than the amount appropriated for 1876 and estimated for 1877, which was $17,548,000, and only $630,887 more than the appropriation for the two items for the current year, $9,100,000 for railroad and $6,737,851 for other routes, making together $15,837,851.

The estimate for 1878 for railway post-office clerks is $1,355,040; for route-agents, $1,071,000; for mail-route messengers, $161,175; and for local agents, $114,450. For a statement of the considerations which

have led to the presentation of these figures, I beg leave to refer to the accompanying letter from the general superintendent of railway mail service.

The estimate for mail-messenger service for 1878 is put at $704,025, an increase of 5 per cent. on the appropriation for the current year, which it is anticipated the natural growth of the service will require. The increase of the cost for 1876 over 1875 was 5.54 per cent.

The estimate for mail locks and keys for 1878 is $20,000, the amount appropriated for the current year. And for mail-bags and mail-bag catchers the estimate for 1878 is $225,000, an excess of $50,000 over the appropriation for the current year. That appropriation is $25,000 less than the estimate made by the Department for the year, and will, it is believed, fall short by that amount of meeting the actual needs of the service, rendering necessary for the next year the increased amount here stated.

By reference to Table G, prepared for the appendix to your annual report, it will be seen that the total number of new mail-bags purchased and put into the service during the year 1876 was 103,794, of which 22,814 were locked pouches and bags, used chiefly for letters, and 80,980 tied sacks, (canvas,) used exclusively for printed and third-class matter. This was an increase over the preceding year of 10,264 locked pouches and bags and 13,314 tied sacks. This increase was largely occasioned by the extension of service on railway-routes, the increased frequency and expedition of the mails, the establishment of the through registered-mail system, and the increased bulk of printed and third-class mail-matter. The growth of the railway mail-service will continue to increase this item of expense to the Department. But while the expenditure for new mail-bags was thus increased, there was an extraordinary decrease of the aggregate cost of repairs, caused by a radical reform in the method of having such work done. Under a practice which was established by postal regulation, and which had prevailed for more than thirty years, damaged mail-bags, collected in nearly all the principal cities, were given out from the post-offices for repairs by special contract. The aggregate cost under that system, however inconsiderable for a time after its inception, gradually increased with the growth of the mail-service until at length it assumed such magnitude as to call for investigation and correction. This investigation was made by yourself while at the head of this bureau, and the plan now in operation devised. This system abolishes entirely the old contract system, and concentrates all the damaged mail-bags at the several depositories in the post-offices at New York, Washington, Indianapolis, Saint Louis, and Chicago. In these post-offices repair-shops are established, and the needful operatives are employed by the postmasters at fixed wages to repair, under the supervision of skilled foremen, all the mail-bags of every description requiring repairs. The material of bags too old and damaged for judicious repairs is utilized to such an extent that small outlays are required for new material. The cost of tools is also comparatively small. Under this system the total cost of such repairs during the year was only $30,161.92. During the preceding year, under the old system, the cost of repairs was $92,419.95.

Tables herewith show the contracts in operation on the 30th June, 1876, for mail-bags, mail-bag catchers, and mail locks and keys, with the name and residence of each contractor, the term of contract, and the price paid for each article of every size and kind.

The increased appropriation asked for in the item of mail-bags and *mail-bag catchers* is due to the probable increase in the railway mail-

service. New lines of railway are completed and approaching completion, and each one largely increases the number of mail-bags and catchers necessary to conduct the service.

The aggregate estimate for 1878 for inland transportation and the items incident thereto will be found to be $20,119,428, against an appropriation for the current year of $19,163,351—an increase of only $956,077, or a little under 5 per cent.

I have the honor to be, sir, very respectfully, your obedient servant,

THOS. J. BRADY,
Second Assistant Postmaster-General.

Hon. JAMES N. TYNER,
Postmaster-General.

Statement of all contracts in operation the 30th June, 1876, for mail-bags, mail-catchers, mail-bag labels, and mail-bag-label cases.

Articles contracted for.	Names of contractors.	Residence.	Term of contract.		Prices paid.				
			From—	To—	Size No. 1.	Size No. 2.	Size No. 3.	Size No. 4.	Size No. 5.
Jute canvas mail-sacks	John Boyle	New York, N. Y	July 1, 1875	July 1, 1879	$0 66	$0 52	$0 15	.....	.....
Cotton canvas mail-sacks	do	do	July 1, 1875	July 1, 1879	1 32	1 02	21	.....	.....
Leather horse-mail bags	Polydore S. Thomson	do	July 1, 1875	July 1, 1879	6 60	5 60	5 10	.....	.....
Mail-catcher pouches	John Boyle	do	July 1, 1875	July 1, 1879	.....	.....	4 25	.....	.....
Mail-bag-label cases	Gaylord Manufacturing Company	Chicopee, Mass	July 1, 1875	July 1, 1879	.....	.....	12	.....	.....
Leather mail-pouches	J. C. Feltman	Albany, N. Y	Nov. 20, 1875	July 1, 1879	6. 50	5. 70	4. 75	$3. 80	$2 70
Use of patent for leather pouches	John Boyle, (patentee)	New York, N. Y	Aug. 7, 1875	(*)	10	10	10	10	10
Printed wooden labels	William P. Wood	Washington, D. C	Dec. 1, 1875	Dec. 1, 1876	.....	.....	00½	.....	.....
Mail-bag catchers	Abbott, Brew & Co	Cleveland, Ohio	.....	.....	.....	.....	15 00	.....	.....
Mail-bag-catcher sockets	do	do	.....	.....	70	40	.....	.....	.....

* Until aggregate sum of payments amount to $10,000, when any further payment will cease for use of patent.

THOMAS J. BRADY,
Second Assistant Postmaster-General.

Statement of all contracts in operation the 30th June, 1876, for mail locks and keys.

Articles contracted for.	Names of contractors.	Residence.	Term of contract.		Prices paid.	
			From—	To—	Locks.	Keys.
Registered-mail locks and keys	F. W. Mix	Terryville, Conn	Jan. 1, 1874	Jan. 1, 1878	$1 75	$0 30
Letter-box locks and keys	Smith & Egge	Bridgeport, Conn	Jan. 1, 1874	Jan. 1, 1878	1 25	15
Mail-bag locks and keys	James C. Mix	Syracuse, N. Y	July 1, 1874	July 1, 1878	74	13

THOMAS J. BRADY,
Second Assistant Postmaster-General.

Cost of inland transportation and the items incident thereto for the years 1875 and 1876, with the appropriation for 1877, and the estimates of the amounts necessary to be appropriated for 1878; showing the percentage of increase and decrease, with the cost, appropriation, and estimate for mail locks and keys, mail-bags, and mail-bag catchers.

Object.	Cost for 1875.	Cost for 1876.	Per centum increase or decrease of 1876 as to 1875.		Appropriation for 1877.	Per centum increase or decrease of appropriation of 1877 as to cost of 1876.		Estimate for 1878.	Per centum increase or decrease as to appropriation for 1877.	
			Increase.	Decrease.		Increase.	Decrease.		Increase.	Decrease.
Inland transportation, railroad	$9,216,518 00	$9,543,134 00	3.54	.....	$9,100,000 00	.....	4.64	$10,230,745 00	12.43	.....
Inland transportation, other than railroad	6,136,851 00	5,658,006 00	.....	7.80	6,737,851 00	19.00	.....	6,237,993 00	.....	7.42
Railway post-office clerks	1,222,640 00	1,278,340 00	13.87	.....	1,225,000 00	.....	4.17	1,355,040 00	10.61	.....
Route-agents	943,800 00	975,280 00	3.33	.....	972,500 00	.....	0.29	1,071,000 00	10.13	.....
Mail-route messengers	147,470 00	145,610 00	.....	1.26	153,500 00	5.42	.....	161,175 00	5.00	.....
Local agents	96,580 00	104,910 00	8.62	.....	109,000 00	3.89	.....	114,450 00	5.00	.....
Mail-messengers	621,311 00	655,768 00	5.54	.....	670,500 00	2.24	.....	704,025 00	5.00	.....
Mail locks and keys	31,811 42	16,720 95	.....	47.43	20,000 00	19.60	.....	20,000 00	.....	.....
Mail-bags and mail-bag catchers	187,148 08	208,847 49	11.59	.....	175,000 00	.....	16.21	225,000 00	28.57	.....
	.....	.....	.....	.....	19,163,351 00	.....	.....	20,119,428 00	4.99	.....

The increase in the cost of mail locks and keys in 1875 is owing to putting on mail-locks on street letter-boxes.

THOMAS J. BRADY,
Second Assistant Postmaster-General.

POST-OFFICE DEPARTMENT,
OFFICE OF THIRD ASSISTANT POSTMASTER-GENERAL,
Washington, D. C., November 11, 1876.

SIR: Herewith I have the honor to submit the following tables:

1. Estimate of the expenditures and revenues of the Post-Office Department for the fiscal year ending June 30, 1878.
2. Estimate of the indebtedness of the Department for the past two fiscal years, not yet adjusted.
3. Receipts and expenditures for the fiscal year ended June 30, 1876, compared with the two preceding years.
4. Receipts and disbursements on account of the Post-Office Department at Treasury depositories.
5. Receipts and disbursements at Post-Office depositories.
6 and 7. Number and value of postage-stamps, stamped envelopes, newspaper-wrappers, and postal cards issued during the year.
8. Number and value of official postage-stamps, stamped envelopes, and wrappers furnished the different Executive Departments during the year.
9. Statement showing increase in issues of postage-stamps, stamped envelopes, newspaper-wrappers, and postal cards, of all kinds.
10. Number and value of dead letters received and disposed of at Dead-Letter Office during the year.
11. Statement showing classification and disposition of letters containing valuable inclosures received at Dead-Letter Office during the year.
12. Statement showing number, contents, and disposition of registered letters received at Dead-Letter Office during the year.
13. Number of registered letters sent through the mails, with amount of fees collected thereon, in each State and Territory during the year.

EXPLANATION OF ESTIMATES.

Your attention is respectfully invited to the following detailed statement touching the appropriations asked for by this bureau:

ADHESIVE POSTAGE-STAMPS.

The number of ordinary postage-stamps issued during the fiscal year ended June 30, 1876, was	698,799,090
Add 10 per cent., being about the average yearly rate of increase	69,879,909
Gives estimated issue of ordinary stamps for fiscal year ending June 30, 1877	768,678,999
Add 10 per cent., as before	76,867,899
Gives estimated issue of ordinary stamps for fiscal year ending June 30, 1878	845,546,898
Cost of manufacturing that number at present contract price, 14.99 cents per thousand	$126,747 48
Add estimated cost of manufacturing official stamps, and also of manufacturing the newspaper and periodical stamps required by act of Congress approved June 23, 1874	24,000 00
Gives estimated total cost of manufacturing adhesive postage-stamps during fiscal year ending June 30, 1878	150,747 48

In the foregoing estimate the issues of ordinary stamps, the average annual rate of increase, and the present contract rates, are taken as the best basis of calculation to be obtained.

It is not expected that there will be a great increase, if any, in the

issues of official stamps and newspaper and periodical stamps, and accordingly the estimate is fixed at the same amount ($24,000) as in the appropriation for the current fiscal year. The contracts for manufacturing stamps will expire on the 1st May, 1877, but under a new contract there will not probably be any material deviation from present rates.

POSTAGE-STAMP AGENCY.

For pay of agent and assistants to distribute stamps, and expenses of the agency.. $8,100

This estimate exceeds the present appropriation by $1,200, which amount is intended for the employment of an additional clerk. During the past three years the number of requisitions for postage-stamps has increased more than 57 per cent., reaching 150,284 during the last fiscal year, from 95,377 during the fiscal year ending June 30, 1873; and additional clerical assistance has become absolutely essential to the proper discharge of the business of the agency. The present force consists of an agent at a salary of $2,500 per annum, and two clerks at salaries of $1,800 and $1,600, respectively.

The item "for expenses of agency" is for the purchase of stationery and furniture, and for the necessary expenses of officers and agents while employed in inspecting the manufactory and making investigations connected with the issue of postage-stamps. The amount included for these purposes ($1,000) is the same as in the present appropriation, no increase being deemed necessary.

ORDINARY AND OFFICIAL STAMPED ENVELOPES AND WRAPPERS.

The cost of stamped envelopes and newspaper-wrappers, both ordinary and official, issued during the year ended June 30, 1876, at present contract prices, was	$428,219 03
Add 20 per cent. for increase	85,643 80
Gives estimated cost for year ending June 30, 1877	513,862 83
Add 20 per cent. for increase, as before	102,772 56
Gives estimated cost of manufacture for the year ending June 30, 1878	616,635 39

The same bases of calculation are taken as in the case of postage-stamps, but owing to the greater popularity of stamped envelopes and wrappers, a much larger rate of increase in the issues is to be expected. The issues for the six months ending June 30, 1876, were nearly 17 per cent. in excess of those for the corresponding period of the previous year, and an estimated future increase of 20 per cent. is not an extravagant one. The existing contract is for four years, expiring September 30, 1878, and the rates will therefore remain unchanged.

The stamped envelopes and newspaper-wrappers issued during the fiscal year ending June 30, 1876, were sold at an excess of $40,382.08 over the postage value and the cost of manufacture. Adhesive postage-stamps being sold at face value, the public are not required to pay the cost of manufacture, as in the case of stamped envelopes.

STAMPED-ENVELOPE AGENCY.

For pay of agent and assistants to distribute stamped envelopes and newspaper-wrappers, and expenses of agency $16,300

This estimate agrees in amount with the present appropriation. In explanation of the apparently large amount required for this agency as compared with the New York agency, it may be stated that owing to its near proximity to the railroad depot, the envelopes and wrappers are

mailed directly from the manufactory, instead of going through the Hartford post-office, which is located at a considerable distance from the depot. A large portion of the appropriation is therefore required for the payment of clerks engaged in the registration of packages, which is properly to be considered as post-office work. The postage stamps are mailed from the New York post-office, where the work of registration is done.

The only salaries in excess of $1,200 per annum paid at the Hartford agency are those of the agent who receives $2,500, and of the two principal clerks of the agency proper and of the registry branch, who receive $1,800 each.

The amount included for "expenses of agency" is $1,000, the same as in the appropriation for the present year. It is required for the same general purposes as in the case of the stamp agency.

POSTAL CARDS.

Number of postal cards issued during the fiscal year ended June 30, 1876.	150,815,000
Add 20 per cent. for increase	30,163,000
Gives estimated issue for the year ending June 30, 1877	180,978,000
Add 20 per cent. for increase, as before	36,195,600
Gives estimated issue for the year ending June 30, 1878	217,173,600
Cost of manufacturing that number at present contract prices, $1.39⅞ per thousand	$303,771 56

The increase in the issue of postal cards for the last fiscal year over the preceding one was a little over 40 per cent., but it is not expected to continue at this extraordinary rate. It was undoubtedly due in a great measure to special demands growing out of the Centennial Exhibition, for advertising purposes, and for the correspondence of the unusually large number of people in transit during that occasion. A future increase of 20 per cent. per annum is considered a fair one, and accordingly taken in the above estimate. That it is not extravagant is shown by the fact that the increase for the fiscal year ending June 30, 1875, over the previous year was more than 18 per cent.

The present contract will expire on the 1st May, 1877, but no great variation in price under a new one is anticipated.

POSTAL-CARD AGENCY.

For pay of agent and assistants to distribute postal cards, and expenses of agency	$7,300

At present there are employed at Springfield, Mass., in connection with the inspection and distribution of postal cards, an agent, at a salary of $2,500 per annum, and two clerks, one at $1,400 and the other at $1,200 per annum.

The present appropriation for the agency is $6,100, and the foregoing estimate contemplates the employment of an additional clerk at an annual salary of $1,200.

The number of requisitions for postal cards filled during the fiscal year ending June 30, 1876, was 43,103, and for the fiscal year ending June 30, 1874, 23,634—an increase of 19,469, or a little more than 82 per cent. While, therefore, the work of the agency has nearly doubled within the past two years, no increase of the clerical force has been granted during that time.

The necessity for an additional clerk will be apparent upon this statement of facts. It is certain that the increased business of the future cannot be properly done by the present force, which is now barely adequate.

Postal-card packages are registered and mailed directly from the agency, and not from the Springfield post-office, in like manner as stamped envelopes from the Hartford agency, and for the same reasons.

The estimate, like those for the New York and Hartford agencies, and with similar objects in view, contains an item of $1,000 for expenses, agreeing in that particular with the appropriation for the current year.

REGISTERED-PACKAGE ENVELOPES, LOCKS, AND SEALS.

For registered-package envelopes, locks, and seals..... $40,000

The foregoing estimate is for the same amount as in the appropriation for the current year. The amount expended for these purposes during the fiscal year ending June 30, 1876, was $37,159.01; and, considering the natural increase of the registry business, the estimate will not appear unreasonable.

POST-OFFICE AND DEAD-LETTER ENVELOPES.

For post-office and dead-letter envelopes..... $42,150

In the above estimate, post-office and dead-letter envelopes, now appropriated for separately, are taken together, for the reason that both kinds are furnished under the same contract, and because the dead-letter envelope is really of the same size and grade as one of the items in the series of post-office envelopes. The amount appropriated for post-office envelopes for the present fiscal year is $40,000, and for dead-letter envelopes, $2,150; and the estimate, being for the aggregate of these two amounts, shows no increase over present appropriations. The contract for these envelopes, like that for registered-package envelopes, is, by law, let for one year only, and present rates, therefore, are no absolute criterion for the future.

Post-office envelopes are plain (unstamped) envelopes used in post-offices for official business, and dead-letter envelopes are used for returning dead letters to writers.

SHIP, STEAMBOAT, AND WAY LETTERS.

Sections 3913, 3976, 3977, and 3978, of the Revised Statutes make this appropriation necessary to provide for the payment, to masters or owners of vessels not regularly engaged in transporting the mails, for letters brought and delivered at the post-office, on arrival in port, for transmission to their destination. On delivery of these letters the party addressed pays, in addition to the usual postage, the amount paid to the said masters or owners; consequently, the amounts paid out come back to the Department.

The amount required for this purpose for the next fiscal year is $7,500.

ENGRAVING, PRINTING, AND BINDING DRAFTS AND WARRANTS.

Under this head the Department is supplied with its drafts and warrants used in paying contractors and other creditors, and for the collection of a portion of the balances due the United States by postmasters.

The amount which will be required for this purpose during the next fiscal year is estimated to be $1,500.

SUMMARY OF ESTIMATES.

The amounts estimated to be required by this bureau for service of the fiscal year ending June 30, 1878, as compared with appropriations for 1876–'77, are shown by the following table:

Items.	Appropriated for 1876–'77.	Estimate for 1877–'78.
Postage-stamps	$147,762	$150,747
Expenses of agency	6,900	8,100
Stamped envelopes and wrappers	535,878	616,635
Expenses of agency	16,300	16,300
Postal cards	216,760	303,771
Expenses of agency	6,100	7,300
Registered-package envelopes, &c	40,000	40,000
Post-office and dead-letter envelopes	42,150	42,150
Ship, steamboat, and way letters	7,500	7,500
Engraving and printing drafts and warrants	1,500	1,500
Total	1,020,850	1,194,003
		1,020,850
Increase of estimates, (nearly 17 per cent.)	.....	173,153

OPERATIONS OF THE BUREAU.

The operations of this bureau, through its different divisions, are fully set forth by the following detailed statements:

DIVISION OF FINANCE.

During the fiscal year ended June 30, 1876, there were furnished to this division 3,811 contracts for mail-service, for record upon its books, and 8,312 orders of the Postmaster-General (an increase of 2,304 over last year) recognizing mail-service not under contract, extending or curtailing service, or for the modification of previous orders, which were also recorded.

These contracts and orders furnish complete data by which to insure correct payments to mail-contractors, and consequently make this division a perfect check on the other offices that pass upon contractors' accounts.

Thirty-two thousand eight hundred and fifty (32,850) Auditor's reports (an increase of 2,414 over last year) for pay of mail-contractors and other creditors of the Department, were received, verified, recorded, and paid.

Cash accounts of receipts and disbursements were kept with 45 Treasury depositories, from which were received 980 transcripts of accounts, involving the sum of $10,552,842.81, against which sum there were drawn, registered, and posted to the proper accounts, 13,456 warrants, (an increase of 1,178 over last year.)

These warrants, each accompanied by a circular-receipt, were mailed to the payees, and the receipts, when returned, entered upon the books to show the delivery of the warrants.

(Table No. 4, attached to this report, shows the cash transactions at Treasury depositories in detail.)

To facilitate the business of the Department, the number of Post-Office depositories was reduced during the year from 128 to 100, at which the receipts and disbursements involved the sum of $3,307,244.87, divided as follows: Receipts from proceeds of the depositories themselves, $2,784,217.08; from collection drafts on other offices, $163,737.10; and from deposits by other offices, $359,290.69. Against the aggregate accumulation in the depositories, there were drawn and posted to the legitimate accounts 19,446 drafts, (an increase of 1,188 over last year.) In addition to the amount paid out upon drafts, ($1,594,066.76,) the sum of $1,647,779.70 was paid to route-agents, postal clerks, mail-messengers, letter-carriers, &c., which sum entered into the accounts kept with the depositories.

The number of statements of account received from the postmasters at these 100 depositories during the year was 1,200.

(Table No. 5 of this report shows the cash transactions at Post-Office depositories in detail.)

The number of depositing offices averaged during the year 2,900, standing on June 30, 1876, at 2,683, from which offices there were received 8,905 certificates of deposit, amounting in the aggregate to $5,192,681.43, which amount was duly credited to the postmasters making the deposits.

The number of circulars sent out during the year was 19,250; the number of quarterly statements of account furnished to postmasters was 1,775; and the number of letters received and acted upon in the transaction of the business of the division, together with those written, exceeded 2,500.

As shown by the foregoing, there has been a general increase in the work of this division, and, in the natural course of events, it will continue to increase in the future at about the same ratio.

The present force, therefore, should suffer no diminution, but, on the contrary, should be increased as the necessities of the division require.

DIVISION OF POSTAGE-STAMPS, ENVELOPES, AND POSTAL CARDS.

The number of ordinary adhesive postage-stamps issued to postmasters for sale to the public during the year was 698,799,090, valued at $18,773,454; of newspaper and periodical stamps, 1,290,347, valued at $945,254.75; of ordinary stamped envelopes, plain, 82,467,000, valued at $2,280,318.74; of stamped envelopes bearing a return-request, 64,554,500, valued at $2,079,578.30; of newspaper-wrappers, 18,498,750, valued at $273,723.50; of postal cards, 150,815,000, valued at $1,508,150; of official postage-stamps issued to the Executive Departments for official use, 17,682,665, valued at $663,831.50; and of official stamped envelopes and wrappers, 15,690,155, valued at $429,110.93; making a total number of 1,049,797,507, and a total value of $26,963,421.72. The increase in value of ordinary postage-stamps was $501,975, or 2.74 per cent.; of newspaper and periodical stamps, $129,352.28, or 15.85 per cent.; of ordinary stamped envelopes, plain, $234,207.39, or 11.44 per cent.; of special request stamped envelopes, $287,892.05, or 16.06 per cent.; of postal cards, $431,990, or 40.14 per cent.; and of official stamped envelopes and wrappers, $74,588.75, or 21.03 per cent.

There was a decrease of $12,956.24, or 4.50 per cent., in ordinary newspaper-wrappers, and of $171,138.75, or 20.49 per cent., in official postage-stamps.

To sum up, the net increase in the value of ordinary issues was $1,572,460.48, or 6.47 per cent.

The increase, including the issues for official use, was $1,475,910.48, or 5.79 per cent.

There were also issued within the year 4,025,450 registered-package envelopes, 8,673,975 post-office envelopes, and 1,572,000 dead-letter envelopes; total, 14,271,425.

The number of requisitions filled was as follows: For ordinary postage-stamps, 104,037; for newspaper and periodical stamps, 7,212; for official postage-stamps, 39,035; for ordinary stamped envelopes and wrappers, plain, 49,969; for special-request stamped envelopes, 66,190; for official stamped envelopes, 3,059; for postal cards, 43,103; for registered-package envelopes, 41,640; and for post-office envelopes, 39,865.

The increase in the number of requisitions filled during the last over the previous fiscal year, for ordinary postage-stamps, was 6,865, or 7 per cent.; for newspaper and periodical stamps, 2,040, or 39.4 per cent.; for ordinary stamped envelopes and wrappers, plain, 6,296, or 14.4 per cent.; for special-request stamped envelopes, 12,950, or 24.3 per cent.; for official stamped envelopes, 130, or 4.4 per cent.; for postal cards, 12,135, or 39.1 per cent.; for registered-package envelopes, 5,170, or 14.1 per cent.; and for post-office envelopes, 3,940, or 10.9 per cent.

There was a decrease of 222 in the number of requisitions for official postage-stamps.

The total number of requisitions filled was 394,110, a net increase of 49,304, or 14.2 per cent.

The number of packages of ordinary postage-stamps forwarded was 105,343, an increase of 6,695, or 6.78 per cent.; of newspaper and periodical stamps, 7,093, an increase of 1,920, or 37.11 per cent.; of ordinary stamped envelopes and wrappers, 69,019, an increase of 6,920, or 11.11 per cent.; of stamped envelopes bearing a return-request, 51,500, an increase of 9,301, or 22.04 per cent.; of postal cards, 53,231, an increase of 20,600, or 63.13 per cent.; of official postage-stamps, 38,711, an increase of 101, or 2.6 per cent.; of official stamped envelopes and wrappers, 6,886, an increase of 446, or 6.92 per cent.; of registered-package envelopes, 42,440, an increase of 5,210, or 13.99 per cent.; and of post-office envelopes, 40,436, an increase of 4,004, or 19.99 per cent.

The losses in transit during the year were unusually small, consisting of four packages of postage-stamps, valued at $129; one package of stamped envelopes, valued at $8.45; and two packages of postal cards, valued at $10. This trifling loss of only seven packages, valued at $147.45, out of 331,783 packages, representing an aggregate value of $26,953,421.72, furnishes an excellent illustration of the reliability of the registry system as a means of conveyance for valuable matter.

Under the act of Congress approved June 23, 1874, to take effect January 1, 1875, requiring prepayment of postage on newspapers and periodical publications mailed from known offices of publication or news-agencies to regular subscribers or news-agents, the amount of postage collected during the fiscal year was $1,014,154.27, or $788,891.98 on 39,444,599 pounds of matter at 2 cents per pound, and $225,262.29 on 7,508,743 pounds at 3 cents per pound. The amount collected during the six months ending June 30, 1875, was $486,443.49, and the increase is therefore at the rate of $41,267.29, or 4.24 per cent. per annum.

The New York office alone, during the year, mailed 12,724,015 pounds at 2 cents per pound, and 3,113,842 pounds at 3 cents per pound, a total of 15,837,857 pounds and of $347,895.56, and an increase at the rate of *$12,286.24*, or 3.66 per cent., per annum.

The system of prepayment of second-class matter has given such general satisfaction, and is so manifestly the true one, that no change in the present law is recommended.

During the past two years considerable attention has been given to the examination of mechanical devices and so-called indelible inks intended for the better cancellation of postage-stamps, so as to prevent their reuse, but without satisfactory results. The truth is, that the only means of preventing frauds in the use of washed stamps lies in the exclusive use of stamped envelopes, which, I am satisfied, would result in an annual saving to the postal revenues of from $1,000,000 to $2,000,000.

No changes in the series of postage-stamps or stamped envelopes have been made during the year, except the addition of the No. 4½ commercial size stamped envelope, to which reference was made in my report of last year, and of centennial envelopes, to be alluded to presently.

The commercial envelopes have fully justified the expectation formed of them, the number issued during the year being 17,651,750, or a little more than 12 per cent. of the entire number of envelopes issued. In popularity this size already ranks next to the full-letter and extra-letter sizes, and the indications are that it will take the lead of both of these.

The style of paper and design of postal cards were changed about the 1st of October of last year, with what results will be shown in the increased issues.

To illustrate the process of manufacturing stamped envelopes, the contractors at Hartford early in the year proposed to put one of their improved envelope-machines in the space devoted to the Post-Office Department in the Government building on the Centennial grounds at Philadelphia, and keep it in operation during the continuance of the exhibition without expense to the Department. The proposition was accepted, and a machine, handsomely ornamented, was in almost constant operation, during exhibition hours, from the opening on the 10th May to the 10th November. This machine, with the exception of cutting the blanks or patterns, performs the entire operation of manufacture, folding, stamping, gumming, and, if desired, printing a return-request. Attached to it is an automatic counter, separating the envelopes into packages of 25.

To specially distinguish these envelopes there was adopted for them an entirely new and appropriate design of stamp in the form of a shield inclosing mounted post-boy, train of cars, and telegraph-pole and wires as the principal figures. The paper used has its own distinctive water-mark.

These envelopes are styled centennial stamped envelopes. They are of two sizes, No. 3 full letter, and No. 4½ commercial; of but one grade of paper, first quality, white; and of but one denomination, 3 cents.

The design is the same on both sizes of envelopes, the only difference being that the full-letter size are printed in green and the commercial in vermilion.

It was at first intended to confine the issue of these envelopes to the post-office at Philadelphia, but there was immediately such a general demand for them that the privilege of obtaining them was extended to every post-office in the country.

The issues consisted of 4,775,000 of the full-letter size and 4,227,000 of the commercial size, a total of 9,002,000, of which 5,201,250 were plain and 3,800,750 printed with special return-requests.

The centennial envelopes were furnished by the contractors at the same prices as the corresponding sizes and grades of the ordinary series, and sold to the public at the ordinary rates.

Their issue was discontinued on the 10th November, when the exhibition closed; but those outstanding will of course continue to be valid for postages.

As was expected, the envelope-machine proved to be one of the most attractive features of the Government exhibit, if not of the entire exhibition, being constantly surrounded by large crowds of people while at work. That it had a good effect in encouraging the sale of stamped envelopes is shown by the fact that during five consecutive days in August, when the machine was idle through the illness of one of the operatives, the sales of envelopes at the centennial branch post-office fell down to an average of $30 per day from a daily average of $150 for the five days immediately preceding.

There is reason to believe that many of the envelopes were purchased as souvenirs, and will never be used for postages.

Another interesting feature of the post-office exhibit at the Centennial was a handsomely framed collection of specimens of all the postage-stamps and stamped envelopes ever issued by the Department.

The operations of the stamp division are, in their very nature, of the highest importance, nearly the whole revenue of the Department being derived from postage-stamps, stamped envelopes, and postal cards.

The issues during the last fiscal year represented a value of nearly $27,000,000, and the expenditures for material were upwards of 1,000,000.

To properly conduct the work of the division requires the greatest care and fidelity, to the exercise of which I am glad to be able to bear the most flattering testimony. As the principal business of the division consists in filling requisitions, so the increase in the number of requisitions may be accepted as a criterion of the increase of work. There is, of course, much incidental work in conducting the necessary correspondence, in the preparation of permanent records, the auditing of postmasters' returns of official stamps and envelopes, the adjustment of damaged and unsalable stock returned, and of losses by fire and in the mails, and in other details not necessary to be specified, all of which work increases with the number of requisitions handled.

As before stated, the total number of requisitions filled during the last fiscal year was 394,110, or an increase at the rate of 14.2 per cent. over the previous year. The increase over the fiscal year ending June 30, 1873, was 184,874, or a little over 88 per cent., so that the requisitions have nearly doubled within a period of three years. During this time the increase of clerical force has not kept pace with the increase of work; and, indeed, the division has recently suffered a slight decrease in numbers in contributing its quota to the reductions occasioned by Congress at it last session—a diminution that it was but illy able to sustain.

The work is now carried on only through extraordinary effort; and it is very certain that additional help will be necessary to properly conduct it in the future, and equally certain that it would be mistaken economy to withhold any of the force required for work of this character.

DIVISION OF DEAD-LETTERS.

The number and description of letters received and disposed of in this division during the year, and the value and character of the contents, are fully shown by tables Nos. 10, 11, and 12, submitted herewith for your consideration.

The reduction in the number of letters received is explained by the

facts, 1st, that the use of envelopes bearing requests or business cards is becoming more general, and thus postmasters are enabled to return an increased number of unclaimed letters direct to the writers; 2d, the increased efficiency of the letter-carrier service in large cities; and, 3d, the action of this office in calling the attention of postmasters to cases of mistreatment of correspondence, and thereby providing against a repetition of the error. The present manner of treating held-for-postage letters, which was introduced in April, 1875, and referred to in my last report, viz, holding them in the dead-letter office unopened, and requesting the addressees to furnish the necessary postage, has proven a success in this, that the Department now receives its revenue upon this class of letters, and yet does not encourage the non-payment of postage by the writers, the delay in delivery being a sufficient hardship to incite greater precaution in posting letters. Of the 307,559 held-for-postage letters received, 20,255 were either also misdirected or addressed to foreign countries to which prepayment of postage is imperative, and hence were opened and returned to the writers; 278,357 were treated with notice to addressees, and of these 203,203 were successfully delivered unopened; the balance, 68,201, were finally opened, after having been held the usual period subject to the order of the addressees. There is, of course, some complaint made to the office against this plan, and it is not surprising, for most persons who receive notice of the detention of these letters would be glad to have them promptly forwarded and pay the deficient postage on delivery, and hence cannot see the propriety of the delay imposed by the Department. But the system has proven to be less objectionable to the public than the former one, and is believed to be the best that can be devised under the present law requiring prepayment of at least one full rate on all letters mailed. The apparent material reduction in the value of letters received during the year is explained by the fact that so many of these unpaid letters, which are always proportionately more valuable than any other class, were not opened during the year. Every thing of value is restored to the sender, if possible; and in case of valuable letters, the proportion of those delivered is very large; but of packages of third-class matter, upon which the sender is not allowed to write his name, the proportion delivered is much less. An effort has been made, however, to discover some clue to the owners, and with such success that of 8,577 articles sold at auction in January last, but one has subsequently been applied for, and that was a registered package. The present law, passed since the close of the year, allowing the senders of third-class matter to write their names upon the wrappers, will make the return of such matter much more feasible.

I would repeat my recommendation of last year, that some means be adopted for ascertaining approximately the number of letters mailed in the United States annually. Not only would this information add greatly to the value of the statistics of the Department, but furnish a means of contrasting the number delivered with those lost, and thus serve to silence the few irritable persons who stand ready to condemn the whole Post-Office establishment whenever a single letter fails to reach its destination with the usual dispatch, no matter whether the writer deposited it in a street letter-box or the town pump.*

The whole number of applications made to this office for missing let-

* Recently some workmen, in removing an old pump in this city, found the stock stuffed with all sorts of rubbish, and among other things several letters; the pump with its slot, from which the handle had long since been removed, having been mistaken for a street letter-box.

ters during the year was 8,405, and in 2,975 of these cases the search was successful.

The amount of money taken from letters which could not be restored to the owner was $6,052.53. Amount realized from sale of Dead-Letter Office property at auction in January last, $2,853.17.

DIVISION OF REGISTERED LETTERS.

For the first time in the history of the registered-letter system this office presents a detailed statement of its operations. Table No. 13, accompanying this report, shows the number of domestic and foreign letters registered in each State and Territory, together with the fees received thereon, for the fiscal year ended June 30, 1876.

Four million seven thousand eight hundred and seventeen letters were registered during the year, and the fees received thereon amounted to $335,416.60. An analysis of this gratifying aggregate shows that of the letters registered upon which fees were paid 3,198,931 were domestic; 155,235 were sent to foreign countries; and 653,651 were transmitted through the mails without payment of the registry fee. All the packages of postage-stamps, stamped envelopes, and postal cards sent by the Department to postmasters are included in the free list.

The following statement exhibits the number of letters registered in each State and Territory during the year, viz:

Alabama	41,110	New York	602,499
Arkansas	33,085	North Carolina	72,542
California	100,954	Ohio	230,256
Colorado	28,629	Oregon	18,476
Connecticut	176,101	Pennsylvania	274,940
Delaware	6,211	Rhode Island	17,302
Florida	21,725	South Carolina	36,056
Georgia	59,939	Tennessee	61,195
Illinois	263,934	Texas	86,807
Indiana	150,673	Vermont	51,701
Iowa	168,625	Virginia	70,177
Kansas	68,931	West Virginia	38,746
Kentucky	60,057	Wisconsin	146,197
Louisiana	51,335	Alaska Territory	166
Maine	76,717	Arizona Territory	5,053
Maryland	42,866	Dakota Territory	10,466
Massachusetts	184,603	District of Columbia	81,260
Michigan	154,604	Idaho Territory	7,446
Minnesota	83,625	Indian Territory	4,911
Mississippi	46,043	Montana Territory	9,047
Missouri	153,490	New Mexico Territory	8,252
Nebraska	48,914	Utah Territory	17,432
Nevada	20,509	Washington Territory	8,493
New Hampshire	40,043	Wyoming Territory	10,163
New Jersey	56,347		

The losses of registered matter have been very small. Of the total number of letters transmitted, only 1,049, or about one in every 4,000, were absolutely lost. These losses occurred from various causes; some by robberies of the mail, others by the burning of postal cars and of post-offices—most of them by unavoidable casualties to the service—and no trace of the letters or their contents ever obtained.

The revenues of the Department from the registered-letter system can, I am confident, be materially increased, but it cannot be done without the employment of an additional force of clerks. If postmasters were fully and promptly supplied with blanks and instructions, enabling them to comply with all applications to register letters, there would be *at once* a large increase in the business. With the present available

force it is impossible to do this. I therefore earnestly recommend an increase over the number now employed, of one clerk of class three, two of class one, and two laborers. With this additional expense of about $6,500 a year, I do not hesitate to say that the fees could be increased so that the revenues from the registration of letters would, within three years at the longest, amount to at least a half million dollars annually.

An important feature has been added to this branch of the service during the past year by the introduction of the "through registered pouch system," which was established July 1, 1875, and is now in successful operation throughout various sections of the country; embracing at present twenty-eight pouch offices, seventeen of which exchange with the New York office. The advantages arising from the system cover a large field of detail; but I may briefly say, that having been subjected to a most thorough and critical test, it is found to have eminently fulfilled the objects for which it was inaugurated, to wit, affording additional protection to valuable registered matter in transit; relieving the railway mail-service on main lines by preventing accumulation of registered packages; limiting the possibility of tampering with registered packages, and also the field of investigation in case of its occurrence; insuring certainty of transmission between terminal points; preventing numerous handlings of registered packages and hurried transfers at connecting points; and in short, clearly establishing the fact, as shown by its operations since its inauguration, that it is productive of excellent results, and furnishes a foundation on which to improve the registered-letter system, and extend its benefits to the public and the service.

Appended to this paragraph is a schedule, showing the total number of through registered pouches received and dispatched, together with the total number of registered packages received and sent from the post-office at New York City, from July 2, 1875, to June 30, 1876, as a partial indication of the workings and importance of the system.

Schedule.

Regular pouches sent	4,587	Number of packages sent	117,007
Regular pouches received	4,380	Number of packages received	77,508
Transit pouches received	1,470	Number of packages in transit	12,332
Total pouches handled	10,437	Total packages in pouches	206,847

In the very elaborate and satisfactory report accompanying the above exhibit from the office referred to, the postmaster thereat takes occasion to say that, with an average of nearly twenty-nine packages in each pouch, or an average of two hundred and thirty-five packages pouched daily, (Sundays included,) not a single loss or error has occurred, and urgently recommends the extension of the system throughout all parts of the country where needed. Similar reports have been received from all the other offices, reiterating in substance what has already been said, in commendation of the "through registered pouch system."

DIVISION OF FILES, RECORDS, AND MAILS.

The number of official letters received and disposed of by this division during the year amounted to 928,000.

Of the number received 28,872 were briefed, recorded, and, after being acted upon, filed; and 7,206 letters written in the bureau were copied, enveloped, and stamped for mailing.

The number of circulars stamped and sent out was 137,600.

The number of employés in this division is only four; and, taking into consideration that three of them were at times engaged on other duties, it will be seen that the amount of work performed, in proportion to the number employed, has been extremely large.

Very respectfully, &c.,

EDWARD W. BARBER,
Third Assistant Postmaster-General.

Hon. JAS. N. TYNER,
Postmaster-General.

No. 2.—*Estimate of indebtedness of the Post-Office Department for fiscal year ended June 30, 1876, not yet adjusted.*

Balances due foreign countries		$33,253 20
Mail-service under contract or recognized, but not yet reported for payment		989,069 50
Mail-service unrecognized—		
Fiscal year ended June 30, 1875	$198,744 00	
Fiscal year ended June 30, 1876	154,280 85	
		353,024 85
		1,375,347 55

EDWARD W. BARBER,
Third Assistant Postmaster-General.

No. 3.—*Statement exhibiting the receipts and expenditures, under appropriate heads, by quar and*

RECEIPTS.

	Quarter ended September 30, 1875.	Quarter ended December 31, 1875.	Quarter ended March 31, 1876.	Quarter en June 30 1876.
Letter-postage paid in money	$49, 539 24	$58, 937 79	$65, 548 97	$50, 766
Book, newspaper, and pamphlet postage	148 50	48 69	13 87	.....
Box-rents and branch offices	330, 607 39	325, 963 73	321, 478 70	327, 877
Fines and penalties	756 05	1, 028 13	989 77	584
Postage-stamps, stamped envelopes, newspaper-wrappers, and postal cards.	6, 286, 129 29	6, 832, 277 81	7, 002, 974 39	6, 758, 130
Dead-letters	2, 866 53	4, 380 17	893 00	1, 749
Miscellaneous	7, 735 71	7, 974 78	6, 739 25	7, 287
Revenue from money-order business	.....	.....	.....	190, 770
	6, 677, 782 71	7, 230, 611 10	7, 398, 637 95	7, 337, 165

Comparison, including revenue from money-order business and official stamps:
Increase of receipts over year ended June 30, 1875, $1,852,836.91, or 6.4 + per cent.
Increase of receipts over year ended June 30, 1874, $2,167,125.68, or 7.5 + per cent.

EXPENDITURES.

Compensation of postmasters	$1, 777, 353 76	$1, 825, 059 83	$1, 931, 130 00	$1, 863 854
Compensation of postmasters, previous years, act March 3, 1875.	762 65	370 78	42 00	.....
Compensation of clerks for post-offices	864, 423 11	864, 970 19	854, 852 43	896, 484
Compensation of letter-carriers and incidental expenses.	490, 951 02	497, 399 97	497, 304 53	495, 139
Wrapping-paper	3, 177 22	8, 204 80	3, 412 50	3, 412
Twine	10, 046 40	12, 939 39	11, 474 50	4, 258
Postmarking and cancelling stamps	2, 528 05	1, 711 37	2, 776 73	1, 841
Letter-balances	677 56	2, 123 64	5 13	1, 101
Rent, light, and fuel for post-offices	86, 572 09	98, 309 53	98, 301 77	107, 239
Stationery	11, 554 31	9, 733 27	11, 798 69	10, 226
Furniture for post-offices	5, 050 70	4, 971 00	3, 930 01	5, 547
Miscellaneous	19, 125 73	17, 561 18	14, 324 18	25, 011
Inland mail transportation	3, 734, 087 96	3, 827, 899 35	3, 564, 207 48	3, 619, 651
Compensation of railway post-office clerks	287, 216 29	296, 528 31	319, 628 56	320, 377
Compensation of route-agents	230, 209 06	238, 085 59	232, 038 04	239, 819
Compensation of mail-route messengers	38, 278 28	35, 959 69	36, 288 89	36, 625
Compensation of local agents	25, 028 21	25, 581 09	25, 458 71	25, 745
Compensation of mail-messengers	152, 568 01	160, 321 19	161, 067 10	158, 691
Mail-locks and keys	901 25	10, 892 30	3, 916 15	.....
Mail-bags and catchers	34, 286 77	62, 395 25	64, 009 83	45, 825
Post-route maps	8, 855 60	8, 278 46	6, 528 86	.....
Mail depredations and special agents	36, 831 71	33, 620 40	35, 919 66	12, 305
Postage-stamps	28, 468 43	28, 466 16	52, 711 71	11, 141
Distribution of postage-stamps	2, 067 35	1, 508 50	988 74	486
Stamped envelopes and newspaper-wrappers.	109, 898 98	109, 444 82	109, 027 69	30, 228
Distribution of stamped envelopes and newspaper-wrappers.	3, 205 43	2, 929 48	2, 625 28	1, 260
Postal cards	59, 050 10	53, 392 59	56, 016 42	13, 663
Distribution of postal cards	1, 760 34	771 08	1, 076 10	420
Registered-package envelopes, locks, and seals.	1, 350 66	6, 790 29	11, 196 03	12, 830
Official envelopes for postmasters	3, 735 95	2, 878 40	5, 242 48	3, 566
Dead-letter envelopes	.....	783 00	696 00	800
Ship, steamboat, and way letters	1, 329 43	971 70	844 17	926
Fees to United States marshals, attorneys, clerks of court, and counsel.	743 98	1, 192 27	2, 001 74	965
Engraving, printing, and binding drafts and warrants.	376 25	408 25	965 00	1
Advertising	30, 910 98	19, 458 56	4, 026 25	32, 459
Miscellaneous	361 73	173 58	474 15	611
Foreign mail transportation	52, 844 57	65, 038 12	60, 557 86	50, 682
Balances due foreign countries	24, 728 76	323 09	4, 325 21	3, 876
Official postal guides	6, 500 62	2, 965 52	6, 515 64	2, 971
Subsidies—China and Brazil lines	162, 500 00	125, 000 00	125, 000 00	125, 000
	8, 310, 319 30	8, 465, 411 99	8, 322, 706 22	8, 165, 050

for the fiscal year ended June 30, 1876, *compared with fiscal years ended June* 30, 1875, 30, 1874.

RECEIPTS.

Total, year ended June 30, 1876.	Total expenditures for previous fiscal years.	Total, year ended June 30, 1875.	Compared with year ended June 30, 1875.		Total, year ended June 30, 1874.	Compared with year ended June 30, 1874.	
			Increase.	Decrease.		Increase.	Decrease.
$224,792 37	.....	$286,969 04	.....	$62,176 67	$326,295 25	.....	$101,502 88
211 06	.....	579,364 95	.....	579,153 89	1,392,374 06	.....	1,392,163 00
1,305,927 05	.....	1,270,554 23	$35,372 82	.....	1,226,925 85	$79,001 20	.....
3,358 01	.....	14,286 29	.....	10,928 28	10,711 12	.....	7,353 11
26,879,512 10	.....	24,490,942 23	2,388,569 87	.....	23,388,722 20	3,490,789 90	.....
9,889 20	.....	9,180 00	709 20	.....	8,721 00	1,168 20	.....
29,736 87	.....	19,921 76	9,815 11	.....	18,124 22	11,612 65	.....
190,770 84	.....	120,142 09	70,628 75	.....	105,198 12	85,572 72	.....
28,644,197 50	.....	26,791,360 59	2,505,095 75	652,258 84	26,477,071 82	3,668,144 67	1,501,018 99
26,791,360 59	.....	.....	652,258 84	.....	28,644,197 50	1,501,018 99	.....
1,852,836 91	.....	.....	1,852,836 91	.....	2,167,125 68	2,167,125 68	.....

Comparison, excluding revenue from money-order business and official postage-stamps:
Increase of receipts over year ended June 30, 1875, $1,650,493.41, or 5.7 + per cent.
Increase of receipts over year ended June 30, 1874, $2,813,542.33, or 9.9 + per cent.

EXPENDITURES.

$7,397,397 91	$15,937 49	$7,049,935 77	.....	.....	$5,818,472 17	.....	.....
1,175 43	1,175 43	298,187 33	.....	.....	.....	.....	.....
3,480,730 15	763 90	3,414,811 26	.....	.....	3,297,961 77	.....	.....
1,980,795 02	.....	1,879,210 11	.....	.....	1,802,418 68	.....	.....
18,207 02	.....	11,567 10	.....	.....	20,200 00	.....	.....
38,718 29	.....	43,811 57	.....	.....	.....	.....	.....
8,857 90	.....	5,943 28	.....	.....	.....	.....	.....
3,907 39	.....	19,449 24	.....	.....	.....	.....	.....
390,422 77	.....	389,638 85	.....	.....	.....	.....	.....
43,312 83	.....	39,427 61	.....	.....	.....	.....	.....
19,499 27	.....	16,864 31	.....	.....	32,711 90	.....	.....
76,022 66	.....	.....	.....	.....	.....	.....	.....
14,745,845 95	424,343 35	18,777,201 20	.....	.....	18,881,319 05	.....	.....
1,223,750 19	.....	.....	.....	.....	.....	.....	.....
940,151 97	.....	.....	.....	.....	.....	.....	.....
147,152 27	.....	.....	.....	.....	.....	.....	.....
101,813 27	.....	.....	.....	.....	.....	.....	.....
632,648 03	.....	.....	.....	.....	.....	.....	.....
15,709 70	.....	31,811 42	.....	.....	48,097 25	.....	.....
206,517 49	29 40	187,148 08	.....	.....	212,714 76	.....	.....
23,662 92	.....	30,357 91	.....	.....	.....	.....	.....
118,676 94	.....	150,693 77	.....	.....	165,478 63	.....	.....
120,788 08	.....	.....	.....	.....	.....	.....	.....
5,050 85	.....	.....	.....	.....	.....	.....	.....
358,600 14	.....	724,186 84	.....	.....	845,196 08	.....	.....
10,021 16	.....	.....	.....	.....	.....	.....	.....
182,122 79	.....	.....	.....	.....	.....	.....	.....
4,027 84	.....	.....	.....	.....	.....	.....	.....
32,167 59	.....	.....	.....	.....	.....	.....	.....
15,423 31	.....	.....	.....	.....	.....	.....	.....
2,279 40	.....	2,312 42	.....	.....	5,983 89	.....	.....
4,071 83	.....	3,753 18	.....	.....	4,188 42	.....	.....
4,903 28	.....	.....	.....	.....	.....	.....	.....
1,751 00	.....	.....	.....	.....	.....	.....	.....
86,855 14	.....	168,381 20	.....	.....	109,740 68	.....	.....
1,620 51	.....	178,434 53	.....	.....	677,046 35	.....	.....
229,123 26	.....	.....	.....	.....	.....	.....	.....
33,253 20	25,051 85	181,732 52	.....	.....	204,884 95	.....	.....
18,952 83	.....	6,450 00	.....	.....	.....	.....	.....
537,500 00	.....	.....	.....	.....	.....	.....	.....
33,363,487 58	467,301 42	33,611,309 45	.....	.....	32,126,414 58	.....	.....

EDWARD W. BARBER,
Third Assistant Postmaster-General.

No. 4.—*Receipts and disbursements at Treasury*

Depositories.	Deposits.	Grants from Treasury.	By transfer.	Aggregate accumulation.	Aggregate receipts.
Treasurer U. S., Washington, D. C	$743, 756 94		$343, 067 78	$1,086,824 72	$743, 756 94
Asst. treasurer U. S., Baltimore, Md	151, 838 99		50, 000 00	201, 838 99	151, 838 99
Asst. treasurer U. S., Boston, Mass	570, 600 87		25, 000 00	595, 600 87	570, 600 87
Asst. treasurer U. S., Charleston, S. C	28, 696 01		300, 000 00	328, 696 01	28, 696 01
Asst. treasurer U. S., Chicago, Ill	263, 636 23		1, 250, 000 00	1, 513, 636 23	263, 636 23
Asst. treasurer U. S, Cincinnati, Ohio	260, 082 51			260, 082 51	260, 082 51
Asst. treasurer U. S., New Orleans, La	64, 557 19		375, 000 00	439, 557 19	64, 557 19
Asst. treasurer U. S., New York, N. Y	2, 297, 402 11	$5,089,776 50	400, 000 00	7, 787, 178 61	7, 387, 178 61
Asst. treasurer U. S., Philadelphia, Pa	533, 511 76			533, 511 76	533, 511 76
Asst. treasurer U. S., San Francisco, Cal	307, 440 75			307, 440 75	307, 440 75
Asst. treasurer U. S., Saint Louis, Mo	222, 214 37		875, 000 00	1, 097, 214 37	222, 214 37
Designated depository, Buffalo, N. Y	1, 000 00			1, 000 00	1, 000 00
Designated depository, Pittsburgh Pa.					
Designated depository, Santa Fé, N. Mex	220 90			220 90	220 90
First Nat'l Bank, Denver, Colo					
First Nat'l Bank, Dubuque, Iowa	285 30			285 30	285 30
First Nat'l Bank, Galveston, Tex	4, 527 22			4, 527 22	4, 527 22
First Nat'l Bank, Leavenworth, Kans	1, 180 99			1, 180 99	1, 180 99
First Nat'l Bank, Memphis, Tenn	252 38			252 38	252 38
First Nat'l Bank, Nashville, Tenn	1, 465 84			1, 465 84	1, 465 84
First Nat'l Bank, Portland, Oreg	1, 387 28			1, 387 28	1, 387 28
First Nat'l Bank, Portsmouth, N. H	560 00			560 00	560 00
First Nat'l Bank, Providence, R. I					
First Nat'l Bank, Richmond, Va	32 20			32 20	32 20
First Nat'l Bank, Springfield, Ill	699 28			699 28	699 28
First Nat'l Bank, Saint Paul, Minn	179 71			179 71	179 71
First Nat'l Bank, Trenton, N. J					
First Nat'l Bank, Yankton, Dak	92 07			92 07	92 07
Second Nat'l Bank, Detroit, Mich	125 00			125 00	125 00
Second Nat'l Bank, New Haven, Conn					
Merchants' Nat'l Bank, Cleveland, Ohio	193 85			193 85	193 85
Merchants' Nat'l Bank, Little Rock, Ark	3, 748 12			3, 748 12	3, 748 12
Merchants' Nat'l Bank, Portland, Me	10 00			10 00	10 00
Merchants' Nat'l Bank, Savannah, Ga	876 21			876 21	876 21
Atlanta Nat'l Bank, Atlanta, Ga	440 00			440 00	440 00
Charter Oak Nat'l Bank, Hartford, Conn					
City Nat'l Bank, Grand Rapids, Mich	267 19			267 19	267 19
Colorado Nat'l Bank, Denver, Colo	273 00			273 00	273 00
East Tenn. Nat'l Bank, Knoxville, Tenn	36 59			36 59	36 59
Exchange Nat'l Bank, Norfolk, Va	50 00			50 00	50 00
Indianapolis N'l B'k, Indianapolis, Ind	978 20			978 20	978 20
German Nat'l Bank, Memphis, Tenn	478 30			478 30	478 30
Nat'l Exchange Bank, Milwaukee, Wis					
Raleigh Nat'l Bank, Raleigh, N. C					
San Antonio N'l B'k, San Antonio, Tex	68 95			68 95	68 95
Total	5, 463, 166 31	5, 089, 776 50	3, 618, 067 78	1, 417, 010 59	10, 552, 942 81

Comparative statement between fiscal years

Deposits for fiscal year of 1876		$5, 463, 166 31
Deposits for fiscal year of 1875		4, 809, 392 92
Increase in deposits for 1876		653, 773 39
Grants from the Treasury for 1875	$7, 900, 534 80	
Grants from the Treasury for 1876	5, 089, 776 50	
Decrease in grants for 1876	2, 810, 758 30	
Aggregate receipts for 1875		12, 709, 927 72
Aggregate receipts for 1876		10, 552, 942 81
Decrease in aggregate receipts for 1876		2, 156, 984 91
Increase of grants from Treasury for 1875	2, 810, 758 30	
Deduct increase of deposits for 1876	653, 773 39	
Balance	2, 156, 984 91	
Increase of receipts for 1876		852, 387 13
Decrease of receipts for 1876		198, 613 74
Increase for 1876, as shown above		653, 773 39

depositories during the fiscal year ended June 30, 1876.

Increase of receipts over 1875.	Decrease of receipts from 1875.	Warrants drawn.	Increase over 1875.	Decrease from 1875.	Transfer account. From—	Transfer account. To—	Balance subject to draft June 30, 1876.
$407,201 84		$723,206 53		$94,931 17	$400,000 00	$343,067 78	$11,224 92
	$699 01	229,967 14		62,055 76		50,000 00	31,510 67
	15,173 33	622,032 25	$24,388 15			25,000 00	60,451 82
	7,090 80	329,291 01		5,755 17		300,000 00	20,486 43
304,930 46		1,459,350 59	198,446 43			1,250,000 00	70,600 73
	60,684 26	285,342 13		105,692 07	50,000 00		49,930 81
690 35		433,094 17		63,664 77		375,000 00	39,078 53
62,492 96		5,146,591 17		702,380 12	3,150,000 00	400,000 00	298,452 78
25,839 41		461,732 44	7,796 75				214,015 08
	81,461 10	350,274 68		2,039 82			43,016 15
135,769 18		1,084,042 06	76,222 12			875,000 00	17,153 53
	362 96				850 00		500 00
	923 75						
	516 50				510 90		
	1,188 52						
285 30					285 30		
1,587 72					3,526 81		2,759 99
1,180 99					1,118 24		62 75
	2,710 26				2,432 02		252 38
	492 61				2,117 36		861 83
1,176 14					823 87		583 66
560 00					560 00		
	561 60						
32 20							32 20
170 15					435 98		699 28
60 06					179 71		
	1,221 27						
	610 16				92 07		
	200 00				325 00		125 00
	349 60						
	24 64				45 00		148 85
3,714 87					840 82		2,834 36
9 00					11 00		
	20,911 63				789 11		87 10
43 30					415 00		25 00
	512 60						
267 19					267 19		
273 00							273 00
36 59							36 59
33 05							50 00
43 37					579 05		922 25
	945 30				1,794 40		
	50 00						
	1,903 94						
	19 90				68 95		
552,387 13	198,613 74	11,124,924 17	306,853 45	1,036,518 88	3,618,067 78	3,618,067 78	866,175 69

of 1875 *and* 1876 *at Treasury depositories.*

Warrants drawn for 1875	$11,854,589 60	
Warrants drawn for 1876	11,124,924 17	
Decrease of warrants for 1876		$1,036,518 88
Deduct increase of warrants for 1876		306,853 45
	729,665 43	729,665 43
Balance subject to draft June 30, 1875		1,427,689 62
Balance subject to draft June 30, 1876		866,175 69
Decrease for 1876		561,513 93
Total number of warrants issued during fiscal year 1876		13,456
Total number of warrants issued during fiscal year 1875		12,278
Increase for 1876		1,178

EDWARD W. BARBER,
Third Assistant Postmaster-General.

No. 5.—*Receipts and disbursements at depository post-offices, on account of the fiscal year ended June 30, 1876.*

Office.	State.	Proceeds.	Deposits.	Collections.	Aggregate accumulations.	Amount subject to draft June 30, 1875.	Credit-balance June 30, 1875.	Total.	Disbursements.	Amount subject to draft June 30, 1876.	Credit-balance June 30, 1876.
Adrian	Michigan	$5,159 80	$676 75	$18 99	$5,855 54	$2,111 77	.....	$7,967 31	$6,659 53	$1,307 78	.....
Albany	New York	98,740 64	27,503 83	.....	126,244 47	17,398 30	.....	143,642 77	137,154 95	6,487 82	.....
Albia	Iowa	2,003 97	1,077 42	126 42	3,207 81	449 73	.....	3,657 54	2,119 45	1,538 09	.....
Atlanta	Georgia	26,853 29	5,260 40	1,459 34	33,573 03	.....	$1 22	33,571 81	34,175 32	.....	$603 51
Auburn	New York	29,513 32	356 09	65 47	29,934 88	5,629 05	.....	35,563 93	29,529 56	6,034 37	.....
Augusta	Maine	24,629 59	1,132 19	74 81	25,836 59	3,418 56	.....	29,255 15	23,141 42	6,113 73	.....
Austin	Texas	20,249 76	880 70	2,575 30	23,705 76	713 03	.....	24,418 79	20,472 27	3,946 52	.....
Bangor	Maine	14,283 14	1,911 13	15 76	16,210 03	908 86	.....	17,118 89	16,335 26	783 63	.....
Batavia	New York	3,870 53	41 42	.....	3,911 95	2,831 94	.....	6,743 89	5,168 08	1,575 81	.....
Bay City	Michigan	6,550 66	384 65	287 58	7,222 89	1,775 24	.....	8,998 13	6,868 18	2,129 95	.....
Binghamton	New York	17,385 86	6,952 79	84 77	24,423 42	1,379 21	.....	25,802 63	23,087 75	2,714 88	.....
Burlington	Vermont	13,015 23	.....	4,333 36	17,348 59	1,256 86	.....	18,605 45	17,032 53	1,572 92	.....
Charleston	Illinois	3,301 86	310 25	15 08	3,627 19	1,050 32	.....	4,677 51	4,313 84	363 67	.....
Cleveland	Ohio	153,874 92	11,793 21	1 67	165,669 80	17,255 49	.....	182,925 29	162,076 74	20,848 55	.....
Columbus	do	48,498 92	1,781 12	.....	50,280 04	2,303 93	.....	52,583 97	47,921 10	4,662 87	.....
Concord	New Hampshire	14,698 16	10,323 24	.....	25,021 40	74 58	.....	25,095 98	22,516 40	2,579 58	.....
Decorah	Iowa	3,361 10	114 45	.....	3,475 55	539 55	.....	4,015 10	2,576 69	1,438 41	.....
Denver	Colorado	17,467 37	5,869 77	736 68	24,073 82	1,525 11	.....	25,598 93	25,150 43	448 50	.....
Des Moines	Iowa	31,676 82	23,019 50	323 96	55,020 28	3,634 87	.....	58,655 15	45,005 97	13,649 18	.....
Detroit	Michigan	144,726 98	3,447 68	.....	148,174 66	15,635 90	.....	163,810 56	144,143 71	19,666 85	.....
Dubuque	Iowa	21,845 40	2,861 48	13 61	24,720 49	.....	508 85	24,211 64	23,772 86	438 78	.....
East Saginaw	Michigan	9,494 38	185 64	.....	9,680 02	.....	.....	9,680 02	7,999 12	1,680 90	.....
Elmira	New York	18,846 64	2,463 18	448 95	21,758 77	412 16	.....	22,170 93	22,115 05	55 88	.....
Evansville	Indiana	15,780 56	280 03	271 77	16,332 36	.....	1,123 78	15,208 58	14,816 50	392 08	.....
Fort Dodge	Iowa	2,511 78	927 49	15 30	3,454 57	141 68	.....	3,596 25	3,200 61	395 64	.....
Fort Wayne	Indiana	14,538 93	1,399 37	.....	15,938 30	517 78	.....	16,456 08	15,465 88	990 20	.....
Grand Rapids	Michigan	19,914 21	546 80	253 55	20,714 56	933 50	.....	21,648 06	19,105 81	2,542 25	.....
Harrisburgh	Pennsylvania	41,249 46	4,927 75	537 02	46,714 23	2,518 23	.....	49,232 46	42,671 25	6,561 21	.....
Hartford	Connecticut	84,407 14	8,238 31	1 49	92,646 94	4,437 93	.....	97,084 87	90,066 35	7,018 52	.....
Houghton	Michigan	1,243 17	2,356 21	.....	3,599 38	2,964 27	.....	6,563 65	5,915 16	648 49	.....
Houston	Texas	13,587 26	1,774 98	87 93	15,450 18	330 93	.....	15,781 11	15,535 21	245 90	.....
Huntsville	Alabama	2,042 28	623 54	258 91	2,924 73	271 36	.....	3,196 09	2,906 17	289 92	.....
Indianapolis	Indiana	100,492 92	2,184 74	502 71	103,180 37	1,845 53	.....	105,025 90	102,614 63	2,411 27	.....
Iowa City	Iowa	7,241 81	145 39	226 50	7,613 70	1,714 61	.....	9,328 31	6,082 66	3,245 65	.....
Jacksonville	Florida	8,302 20	2,131 63	2,976 07	13,409 90	.....	152 73	13,257 17	11,808 75	1,448 42	.....
Jamestown	New York	6,298 13	2,063 17	26 52	8,387 82	1,990 20	.....	10,378 02	9,594 26	1,783 76	.....
Kalamazoo	Michigan	11,152 59	1,564 01	137 60	12,854 20	5,533 70	.....	18,387 90	14,431 50	3,956 40	.....
Keene	New Hampshire	5,020 04	888 39	.....	5,908 43	438 94	.....	6,347 37	5,124 18	1,223 19	.....
Keokuk	Iowa	14,237 76	233 27	23 26	14,494 29	2,067 83	.....	16,562 12	13,297 08	3,265 04	.....
Knoxville	Tennessee	8,580 56	1,770 59	246 08	10,597 23	.....	34 45	10,562 78	9,933 74	629 04	.....
La Fayette	Indiana	9,118 79	1,138 24	23 66	10,280 69	1,073 76	.....	11,354 45	12,401 84	.....	1,047 39
Lansing	Michigan	9,666 60	447 38	1,847 32	11,961 30	1,858 37	.....	13,819 67	11,212 38	2,607 29	.....

Leavenworth	Kansas	13,374 99	6,087 45	517 07	18,979 44	.....	184 70	18,794 74	18,600 10	194 64	.....
Lexington	Kentucky	11,466 40	68 30	624 80	12,159 50	1,006 91	.....	13,166 47	11,410 48	1,755 99	.....
Lima	Ohio	4,229 24	2,501 71	50 72	6,781 67	4,001 08	.....	10,782 75	8,707 18	2,075 57	.....
Louisville	Kentucky	130,740 91	3,368 40	109 41	134,218 72	2,440 60	.....	136,659 32	133,922 80	2,736 52	.....
Madison	Wisconsin	15,510 34	1,716 11	130 62	17,357 07	.....	353 25	17,003 82	16,135 82	868 00	.....
Malone	New York	2,082 23	109 65	.....	2,191 88	1,327 67	.....	3,519 55	2,342 49	1,177 06	.....
Marquette	Michigan	2,291 40	577 54	6 01	2,874 95	896 12	.....	3,771 07	3,140 57	630 50	.....
Marshalltown	Iowa	5,412 51	10 00	510 00	5,932 51	.....	116 68	5,815 83	5,117 92	697 91	.....
Meadville	Pennsylvania	7,[illegible]40 51	2,202 45	18 34	9,961 30	194 03	.....	10,155 33	9,419 50	735 83	.....
Memphis	Tennessee	45,726 84	2,967 04	1,363 08	50,056 96	.....	1,345 86	48,711 10	49,930 50	.....	1,219 40
Milwaukee	Wisconsin	121,193 88	6,152 52	1,288 59	128,634 99	2,330 45	.....	130,965 44	122,520 42	8,445 02	.....
Mobile	Alabama	24,923 88	3,649 13	.....	28,573 01	.....	172 67	28,400 34	28,962 75	.....	562 41
Montgomery	...do	7,860 27	6,330 49	1,907 99	16,098 75	221 84	.....	16,320 59	14,505 55	1,815 04	.....
Montpelier	Vermont	5,482 97	1,617 12	.....	7,100 09	1,414 45	.....	8,514 54	6,944 08	1,570 46	.....
Mount Pleasant	Iowa	2,918 43	50 75	.....	2,969 18	1,804 10	.....	4,773 28	2,900 27	1,873 01	.....
Nashville	Tennessee	34,896 93	2,144 78	.....	37,041 71	.....	228 68	36,813 03	36,912 76	.....	99 73
Newark	New Jersey	79,573 42	1,214 92	36 88	80,825 22	22,833 20	.....	103,658 42	85,091 13	18,567 29	.....
New Bedford	Massachusetts	19,500 96	1,082 90	.....	20,583 86	580 18	.....	21,164 04	18,639 86	2,524 18	.....
New Haven	Connecticut	65,716 33	16,733 20	83 11	82,532 64	5,009 85	.....	87,542 49	81,978 76	5,563 73	.....
Norwich	New York	3,502 91	1,286 31	192 00	4,981 22	923 96	.....	5,905 18	5,092 42	812 76	.....
Ogdensburgh	...do	5,747 32	1,613 86	.....	7,361 18	388 44	.....	7,749 62	6,530 50	1,219 12	.....
Olean	...do	2,207 63	921 65	424 83	3,554 11	237 87	.....	3,791 98	3,181 03	610 95	.....
Omaha	Nebraska	22,555 78	27,821 10	22,206 05	72,582 93	1,782 73	.....	74,365 66	71,704 80	2,660 86	.....
Peoria	Illinois	30,269 64	899 57	94 64	31,263 85	.....	188 65	31,075 20	27,344 84	3,730 36	.....
Pittsburgh	Pennsylvania	171,198 41	5,627 18	12 52	176,838 11	12,449 25	.....	189,287 36	173,419 13	15,868 23	.....
Plattsburgh	New York	4,098 31	1,506 97	18 36	5,623 64	268 51	.....	5,892 15	5,106 56	785 59	.....
Portland	Maine	59,201 20	9,188 72	48 29	68,438 21	3,135 93	.....	71,574 14	59,316 69	12,257 45	.....
Portsmouth	New Hampshire	6,285 03	8,128 71	.....	14,413 74	1,743 90	.....	16,157 64	14,746 18	1,411 46	.....
Portsmouth	Ohio	5,610 53	4,553 22	155 60	10,319 35	557 05	.....	10,876 40	9,672 10	1,204 30	.....
Providence	Rhode Island	104,204 87	28,207 11	.....	132,411 98	6,603 81	.....	139,015 79	115,510 93	23,504 86	.....
Raleigh	North Carolina	12,808 77	3,148 73	512 71	16,470 21	.....	1,245 46	15,224 75	15,018 23	206 52	.....
Richmond	Virginia	54,237 94	6,218 07	2,174 98	62,630 99	3,115 67	.....	65,746 66	61,393 74	4,352 92	.....
Rochester	New York	104,225 59	4,451 94	4,324 82	113,002 35	9,391 50	.....	122,393 85	115,872 24	6,521 61	.....
Rutland	Vermont	5,438 71	2,889 61	22 22	8,350 54	591 24	.....	8,941 78	7,821 29	1,120 49	.....
Saint Albans	...do	4,086 29	176 72	.....	4,263 01	2,003 33	.....	6,266 34	4,961 17	1,305 17	.....
Saint Johnsbury	...do	4,263 52	2,265 01	1,293 11	7,821 64	831 19	.....	8,652 83	6,920 31	1,732 52	.....
Saint Paul	Minnesota	44,483 81	16,594 15	2,447 02	63,524 98	.....	151 82	63,373 16	59,911 78	3,461 38	.....
Sandusky	Ohio	7,167 28	1,691 24	26 93	8,885 45	788 21	.....	9,673 66	7,125 71	2,547 95	.....
Savannah	Georgia	24,733 42	205 03	469 96	25,408 41	.....	684 22	24,724 19	25,564 69	.....	840 50
Scranton	Pennsylvania	14,095 04	1,869 32	89 17	16,053 53	170 80	.....	16,224 33	13,517 76	2,706 57	.....
Springfield	Illinois	16,194 61	814 09	.....	17,008 70	788 19	.....	17,796 89	16,056 62	1,740 27	.....
Springfield	Massachusetts	47,089 38	5,011 99	.....	52,101 37	5,499 05	.....	57,600 42	54,687 43	2,912 99	.....
Steubenville	Ohio	5,844 28	793 36	.....	6,637 64	2,978 08	.....	9,615 72	7,839 02	1,776 70	.....
Syracuse	New York	57,577 39	3,671 32	2,359 34	63,608 05	7,094 18	.....	70,702 23	63,677 40	7,024 83	.....
Taunton	Massachusetts	9,388 09	1,124 39	.....	10,512 48	1,414 52	.....	11,927 00	10,318 68	1,608 32	.....
Terre Haute	Indiana	14,315 62	902 02	443 84	15,661 48	1,506 54	.....	17,168 02	16,261 47	906 55	.....
Toledo	Ohio	71,645 18	2,018 01	101,543 93	175,207 12	1,730 95	.....	176,938 07	170,828 99	6,109 08	.....
Towanda	Pennsylvania	2,401 75	264 00	28 13	2,693 88	728 53	.....	3,422 41	2,894 00	528 41	.....
Urbana	Ohio	4,798 26	206 55	149 05	1,153 86	939 46	.....	6,093 32	4,714 40	1,378 92	.....
Utica	New York	38,368 61	5,304 60	.....	43,673 21	15,224 64	.....	58,897 85	54,916 38	3,981 47	.....
Watertown	...do	13,812 96	1 50	.....	13,814 46	2,297 40	.....	16,111 86	14,078 21	2,033 65	.....
Wellsborough	Pennsylvania	1,202 75	545 58	8 78	1,757 11	1,100 88	.....	2,857 99	2,564 75	293 24	.....

No. 5.—*Receipts and disbursements at depository post-offices, &c.*—Continued.

Office.	State.	Proceeds.	Deposits.	Collections.	Aggregate accumulations.	Amount subject to draft June 30, 1875.	Credit-balance June 30, 1875.	Total.	Disbursements.	Amount subject to draft June 30, 1876.	Credit-balance June 30, 1876.
Wheeling	West Virginia	$17,684 26	$1,413 61	.....	$19,097 87	$5,575 19	.....	$24,673 06	$22,961 11	$1,711 95	.....
Williamsport	Pennsylvania	13,876 59	217 38	.....	14,093 97	1,935 13	.....	16,029 10	15,063 75	965 35	.....
Winona	Minnesota	6,455 16	1,537 99	$26 76	8,019 91	698 31	.....	8,718 22	7,715 86	1,002 36	.....
Wooster	Ohio	3,805 18	662 21	.....	4,467 39	5,269 71	.....	9,737 10	8,292 72	1,444 38	.....
Worcester	Massachusetts	53,158 88	4,433 97	.....	57,592 85	2,148 76	.....	59,741 61	54,771 03	4,970 58	.....
Zanesville	Ohio	11,099 17	531 26	.....	11,630 43	3,752 86	.....	15,383 29	12,769 44	2,613 85	.....
Total	.....	2,784,217 08	359,290 69	163,737 10	3,307,244 87	258,669 33	$6,493 02	3,359,421 18	3,241,846 46	321,947 66	$4,372 94

EDWARD W. BARBER,
Third Assistant Postmaster-General.

No. 6.—*Postage-stamps, stamped envelopes, newspaper-wrappers, and postal cards issued during the fiscal year ending June 30, 1876.*

ORDINARY POSTAGE-STAMPS.

Quarter ending—	NUMBER AND DENOMINATION OF STAMPS.									Amount.
	1-cent.	2-cent.	3-cent.	5-cent.	6-cent.	10-cent.	15-cent.	30-cent.	90-cent.	
September 30, 1875	25, 036, 600	16, 647, 000	112, 466, 600	3, 241, 620	1, 394, 550	1, 243, 620	131, 320	40, 460	4, 100	$4, 362, 946 00
December 31, 1875	30, 909, 700	19, 696, 200	120, 030, 400	2, 033, 420	1, 950, 200	1, 188, 910	263, 840	119, 260	6, 980	4, 723, 143 00
March 31, 1876	33, 427, 300	19, 934, 400	120, 640, 200	2, 510, 860	1, 830, 900	1, 970, 530	331, 860	100, 040	9, 380	4, 872, 850 00
June 30, 1876	35, 853, 200	18, 280, 000	121, 529, 000	2, 123, 400	1, 949, 850	1, 595, 670	215, 140	89, 680	2, 900	4, 814, 515 00
Total	125, 226, 800	74, 557, 600	474, 666, 200	9, 909, 300	7, 125, 500	5, 998, 730	942, 160	349, 440	23, 360	18, 773, 454 00

NEWSPAPER AND PERIODICAL STAMPS.

Quarter ending—	NUMBER AND DENOMINATION OF STAMPS.												
	2-cent.	3-cent.	4-cent.	6-cent.	8-cent.	9-cent.	10-cent.	12-cent.	24-cent.	36-cent.	48-cent.	60-cent.	72-cent.
September 30, 1875	60, 955	23, 085	30, 495	32, 325	14, 920	5, 920	31, 520	20, 770	16, 830	8, 025	6, 975	6, 025	2, 430
December 31, 1875	59, 675	21, 470	28, 030	25, 905	12, 515	3, 630	32, 500	22, 555	18, 335	9, 250	8, 065	6, 475	2, 550
March 31, 1876	78, 265	27, 600	35, 750	34, 570	20, 940	6, 680	44, 320	25, 995	22, 925	11, 875	10, 260	10, 530	5, 825
June 30, 1876	64, 770	23, 780	31, 850	32, 785	16, 440	6, 420	38, 070	24, 580	22, 960	11, 105	9, 565	9, 280	4, 915
Total	263, 665	95, 935	126, 125	125, 585	64, 815	22, 650	146, 410	93, 900	81, 050	40, 255	34, 865	32, 310	15, 720

Quarter ending—	NUMBER AND DENOMINATION OF STAMPS—Continued.											Amount.
	84-cent.	96-cent.	$1. 92.	$3. 00.	$6. 00.	$9. 00.	$12. 00.	$24. 00.	$36. 00.	$48. 00.	$60. 00.	
September 30, 1875	2, 790	11, 460	6, 290	6, 719	3, 799	2, 571	2, 219	1, 636	529	333	691	$261, 974 55
December 31, 1875	3, 185	9, 940	5, 215	6, 319	1, 673	1, 424	1, 672	404	515	96	648	184, 949 80
March 31, 1876	5, 045	11, 300	7, 050	7, 204	3, 682	1, 781	2, 078	588	439	232	807	243, 701 90
June 30, 1876	4, 570	10, 695	6, 415	5, 874	2, 921	1, 576	1, 884	762	618	513	900	254, 628 50
Total	15, 590	43, 395	24, 970	26, 116	12, 075	7, 352	7, 853	3, 390	2, 101	1, 174	3, 046	945, 254 75

No. 6.—*Postage-stamps, stamped envelopes, newspaper-wrappers, and postal cards issued during the fiscal year ending June* 30, 1876—Continued.

ORDINARY STAMPED ENVELOPES AND WRAPPERS.

Quarter ending—	NUMBER AND DENOMINATION OF ENVELOPES.									NEWSPAPER-WRAPPERS.		Amount.
	1-cent.	2-cent.	3-cent.	5-cent.	6-cent.	10-cent.	15-cent.	30-cent.	90-cent.	1-cent.	2-cent.	
September 30, 1875	3,962,500	555,500	13,580,400	171,750	21,700	.....	.....	.....	.....	2,824,250	1,683,750	$583,514 33
December 31, 1875	5,297,500	1,191,000	15,116,000	26,000	58,600	.....	.....	.....	.....	3,031,250	1,575,000	659,022 95
March 31, 1876	5,217,750	830,500	15,057,500	41,250	46,900	.....	.....	100	100	3,412,250	1,567,000	652,165 52
June 30, 1876	4,911,250	753,000	15,574,600	21,250	29,750	1,250	350	250	250	2,577,250	1,828,000	659,339 44
Total	19,389,000	3,330,000	59,328,500	260,250	156,950	1,250	350	350	350	11,845,000	6,653,750	2,554,042 24

STAMPED ENVELOPES BEARING A REQUEST TO RETURN.

Quarter ending—	NUMBER AND DENOMINATION OF ENVELOPES.						Amount.
	1-cent.	2-cent.	3-cent.	5-cent.	6-cent.	15-cent.	
September 30, 1875	378,000	417,000	14,132,250	4,000	41,000	500	$482,851 00
December 31, 1875	475,000	542,500	16,020,250	7,500	36,000	500	548,993 45
March 31, 1876	405,500	523,500	15,413,000	5,500	57,000	.....	528,944 35
June 30, 1876	382,000	529,000	15,139,000	2,500	42,500	500	518,789 50
Total	1,640,500	2,012,000	60,704,500	19,500	176,500	1,500	2,079,578 30

POSTAL CARDS.

Quarter ending—	Number of cards.	Amount.
September 30, 1875	30, 647, 500	$306, 475 00
December 31, 1875	41, 988, 500	419, 885 00
March 31, 1876	40, 103, 500	401, 035 00
June 30, 1876	38, 075, 500	380, 755 00
Total	150, 815, 000	1, 508, 150 00

OFFICIAL POSTAGE-STAMPS.

Quarter ending—	NUMBER AND DENOMINATION OF STAMPS.												Amount.
	1-cent.	2-cent.	3-cent.	6-cent.	7-cent.	10-cent.	12-cent.	15-cent.	24-cent.	30-cent.	90-cent.	$2.	
September 30, 1875	449, 700	268, 600	3, 108, 300	581, 150	4, 600	28, 975	35, 445	13, 570	10, 050	23, 400	5, 700	.....	$162, 057 40
December 31, 1875	47, 000	29, 400	1, 890, 250	113, 400	4, 100	9, 100	10, 900	4, 470	7, 650	6, 900	2, 960	.....	74, 315 00
March 31, 1876	98, 200	164, 700	2, 722, 350	175, 500	6, 110	27, 450	32, 410	6, 070	3, 530	17, 840	6, 625	500	117, 610 60
June 30, 1876	407, 350	451, 900	5, 528, 700	960, 000	3, 300	207, 400	56, 850	28, 900	24, 100	86, 950	10, 310	.....	309, 848 50
Total	1, 002, 250	914, 600	13, 249, 600	1, 830, 050	18, 110	272, 925	135, 605	53, 010	45, 330	135, 090	25, 595	500	663, 831 50

OFFICIAL STAMPED ENVELOPES AND WRAPPERS.

Quarter ending—	NUMBER AND DENOMINATION OF ENVELOPES.								NEWSPAPER-WRAPPERS.		Amount.
	1-cent.	2-cent.	3-cent.	6-cent.	10-cent.	12-cent.	15-cent.	30-cent.	1-cent.	2-cent.	
September 30, 1875	.....	102, 500	2, 393, 400	61, 900	.....	.....	.....	.....	600, 000	100	$84, 300 42
December 31, 1875	.....	146, 000	2, 957, 500	45, 000	.....	.....	.....	.....	400, 000	.....	99, 353 40
March 31, 1876	.....	191, 500	3, 241, 350	168, 100	.....	.....	.....	.....	600, 000	.....	117, 886 50
June 30, 1876	200	156, 000	3, 659, 150	67, 300	25	100	20	10	900, 000	.....	127, 570 61
Total	200	596, 000	12, 251, 400	342, 300	25	100	20	10	2, 500, 000	100	429, 110 93

No. 6.—*Postage-stamps, stamped envelopes, newspaper-wrappers, and postal cards issued during the fiscal year ended June* 30, 1876—Continued.

RECAPITULATION.

Articles.	Whole number.	Value.
Ordinary postage-stamps	698, 799, 090	$18, 773, 454 00
Newspaper and periodical stamps	1, 290, 347	945, 254 75
Ordinary stamped envelopes—plain	82, 467, 000	2, 280, 318 74
Ordinary stamped envelopes—request	64, 554, 500	2, 079, 578 30
Newspaper-wrappers	18, 498, 750	273, 723 50
Postal cards	150, 815, 000	1, 508, 150 00
Official postage-stamps	17, 682, 665	663, 831 50
Official stamped envelopes and wappers	15, 690, 155	429, 110 93
Aggregate	1, 049, 797, 507	26, 953, 421 72

EDWARD W. BARBER,
Third Assistant Postmaster-General.

No. 7.—*Postage-stamps, stamped envelopes, newspaper-wrappers, and postal cards issued during the fiscal year ended June 30, 1876.*

Description.	Quarter ending September 30, 1875.	Quarter ending December 31, 1875.	Quarter ending March 31, 1876.	Quarter ending June 30, 1876.	Total.
Ordinary postage-stamps.					
One-cent	25, 036, 600	30, 909, 700	33, 427, 300	35, 853, 200	125, 226, 800
Two-cent	16, 647, 000	19, 696, 200	19, 934, 400	18, 280, 000	74, 557, 600
Three-cent	112, 466, 600	120, 030, 400	120, 640, 200	121, 529, 000	474, 666, 200
Five-cent	3, 241, 620	2, 033, 420	2, 510, 860	2, 123, 400	9, 909, 300
Six-cent	1, 394, 550	1, 950, 200	1, 830, 900	1, 949, 850	7, 125, 500
Ten-cent	1, 243, 620	1, 188, 910	1, 970, 530	1, 595, 670	5, 998, 730
Fifteen-cent	131, 320	263, 840	331, 860	215, 140	942, 160
Thirty-cent	40, 460	119, 260	100, 040	89, 680	349, 440
Ninety-cent	4, 100	6, 980	9, 380	2, 900	23, 360
Value	$4, 362, 946 00	$4, 723, 143 00	$4, 872, 850 00	$4, 814, 515 00	$18, 773, 454 00
Newspaper and periodical stamps.					
Two-cent	60, 955	59, 675	78, 265	64, 770	263, 665
Three-cent	23, 085	21, 470	27, 600	23, 780	95, 935
Four-cent	30, 495	28, 030	35, 750	31, 850	126, 125
Six-cent	32, 325	25, 905	34, 570	32, 785	125, 585
Eight-cent	14, 920	12, 515	20, 940	16, 440	64, 815
Nine-cent	5, 920	3, 630	6, 680	6, 420	22, 650
Ten-cent	31, 520	32, 500	44, 320	38, 070	146, 410
Twelve-cent	20, 770	22, 555	25, 995	24, 580	93, 900
Twenty-four cent	16, 830	18, 335	22, 925	22, 960	81, 050
Thirty-six-cent	8, 025	9, 250	11, 875	11, 105	40, 255
Forty-eight-cent	6, 975	8, 065	10, 260	9, 565	34, 865
Sixty-cent	6, 025	6, 475	10, 530	9, 280	32, 310
Seventy-two-cent	2, 430	2, 550	5, 825	4, 915	15, 720
Eighty-four-cent	2, 790	3, 185	5, 045	4, 570	15, 590
Ninety-six-cent	11, 460	9, 940	11, 300	10, 695	43, 395
One-dollar-and-ninety-two-cent	6, 290	5, 215	7, 050	6, 415	24, 970
Three-dollar	6, 719	6, 319	7, 204	5, 874	26, 116
Six-dollar	3, 799	1, 673	3, 682	2, 921	12, 075
Nine-dollar	2, 571	1, 424	1, 781	1, 576	7, 352
Twelve-dollar	2, 219	1, 672	2, 078	1, 884	7, 853
Twenty-four-dollar	1, 636	404	588	762	3, 390
Thirty-six-dollar	529	515	439	618	2, 101
Forty-eight-dollar	333	96	232	513	1, 174
Sixty-dollar	691	648	807	900	3, 046
Value	$261, 974 55	$184, 949 80	$243, 701 90	$254, 628 50	$945, 254 75
Ordinary stamped envelopes.					
One-cent	3, 962, 500	5, 297, 500	5, 217, 750	4, 911, 250	19, 389, 000
Two-cent	555, 500	1, 191, 000	830, 500	753, 000	3, 330, 000
Three-cent	13, 580, 400	15, 116, 000	15, 057, 500	15, 574, 600	59, 328, 500
Five-cent	171, 750	26, 000	41, 250	21, 250	260, 250
Six-cent	21, 700	58, 600	46, 900	29, 750	156, 950
Ten-cent	.....	.....	.....	1, 250	1, 250
Fifteen-cent	.....	.....	.....	350	350
Thirty-cent	.....	.....	100	250	350
Ninety-cent	.....	.....	100	250	350
One-cent wrappers	2, 824, 250	3, 031, 250	3, 412, 250	2, 577, 250	11, 845, 000
Two-cent wrappers	1, 683, 750	1, 575, 000	1, 567, 000	1, 828, 000	6, 653, 750
Value	$583, 514 33	$659, 022 95	$652, 165 52	$659, 339 44	$2, 554, 042 24
Stamped envelopes bearing a request to return letter.					
One-cent	378, 000	475, 000	405, 500	382, 000	1, 640, 500
Two-cent	417, 000	542, 500	523, 500	529, 000	2, 012, 000
Three-cent	14, 132, 250	16, 020, 250	15, 413, 000	15, 139, 000	60, 704, 500
Five-cent	4, 000	7, 500	5, 500	2, 500	19, 500
Six-cent	41, 000	36, 000	57, 000	42, 500	176, 500
Fifteen-cent	500	500	.....	500	1, 500
Value	$482, 851 00	$548, 993 45	$528, 944 35	$518, 789 50	$2, 079, 578 30

No. 7.—*Postage-stamps, stamped envelopes, &c.*—Continued.

Description.	Quarter ending September 30, 1875.	Quarter ending December 31, 1875.	Quarter ending March 31, 1876.	Quarter ending June 30, 1876.	Tot
Postal cards.					
One-cent	30, 647, 500	41, 988, 500	40, 103, 500	38, 075, 500	150, 8
Value	$306, 475 00	$419, 885 00	$401, 035 00	$380, 755 00	$1, 508.
Official postage-stamps.					
One-cent	449, 700	47, 000	98, 200	407, 350	1, 0
Two-cent	268, 600	29, 400	164, 700	451, 900	9
Three-cent	3, 108, 300	1, 890, 250	2, 722, 350	5, 528, 700	13, 2
Six-cent	581, 150	113, 400	175, 500	960, 000	1, 8
Seven-cent	4, 600	4, 100	6, 110	3, 300	
Ten-cent	28, 975	9, 100	27, 450	207, 400	2
Twelve-cent	35, 445	10, 900	32, 410	56, 850	1
Fifteen-cent	13, 570	4, 470	6, 070	28, 900	
Twenty-four-cent	10, 050	7, 650	3, 530	24, 100	
Thirty-cent	23, 400	6, 900	17, 840	86, 950	1
Ninety-cent	5, 700	2, 960	6, 625	10, 310	
Two-dollar	.....	.....	500	.....	
Value	$162, 057 40	$74, 315 00	$117, 610 60	$309, 848 50	$663,
Official stamped envelopes and wrappers.					
One-cent	.....	.....	.....	200	
Two-cent	102, 500	146, 000	191, 500	156, 000	5
Three-cent	2, 393, 400	2, 957, 500	3, 241, 350	3, 629, 150	12, 2
Six-cent	61, 900	45, 000	168, 100	67, 300	3
Ten-cent	.....	.....	.....	25	
Twelve-cent	.....	.....	.....	100	
Fifteen-cent	.....	.....	.....	20	
Thirty-cent	.....	.....	.....	10	
One-cent wrappers	600, 000	400, 000	600, 000	900, 000	2, 5
Two-cent wrappers	100	.....	.....	.....	
Value	$84, 300 42	$99, 353 40	$117, 886 50	$127, 570 61	$429,

RECAPITULATION.

Description.	Number.	Valu
Ordinary postage-stamps	698, 799, 090	$18, 773,
Newspaper and periodical stamps	1, 290, 347	945,
Ordinary stamped envelopes—plain	82, 467, 000	2, 280,
request	64, 554, 500	2, 079,
Total stamped envelopes	147, 021, 500	4, 359,
Newspaper-wrappers	18, 498, 750	273,
Postal cards	150, 815, 000	1, 508,
Official postage-stamps	17, 682, 665	663,
Official stamped envelopes and wrappers	15, 690, 155	429,
Whole number and value of stamps, stamped envelopes, and wrappers.	1, 049, 797, 507	26, 953,

EDWARD W. BARBER,
Third Assistant Postmaster-General

No. 8.—*Statement of the official stamps and stamped envelopes furnished each of the Executive Departments during the fiscal year ended June 30, 1876.*

OFFICIAL POSTAGE-STAMPS.

Name of Department.	NUMBER AND DENOMINATION OF STAMPS.												Amount.
	1-cent.	2-cent.	3-cent.	6-cent.	7-cent.	10-cent.	12-cent.	15-cent.	24-cent.	30-cent.	90-cent.	2-dollar.	
Executive	2,200	3,000	5,400	2,100	.....	2,300	.....	.....	.....	.....	.....	.....	$600 00
State	5,000	5,000	5,000	10,000	5,000	.....	1,000	1,000	1,000	1,000	.....	500	3,060 00
Treasury	550,000	300,000	1,800,000	540,000	.....	.....	.....	.....	.....	.....	.....	.....	97,900 00
War	83,750	51,800	231,000	144,050	13,110	50,725	29,830	14,430	12,080	12,840	3,245	.....	38,852 50
Navy	15,000	25,000	95,000	40,000	.....	10,000	10,000	8,000	4,000	8,000	2,000	.....	14,460 00
Post-Office	232,300	247,300	10,435,200	745,900	.....	101,200	13,975	9,280	9,500	60,400	4,950	.....	403,123 00
Interior	114,000	253,000	615,000	336,000	.....	105,200	77,500	18,500	18,250	52,250	15,000	.....	100,960 00
Justice	.....	4,500	33,000	12,000	.....	3,500	3,300	1,800	500	600	400	.....	3,476 00
Agriculture	.....	25,000	30,000	.....	.....	.....	.....	.....	.....	.....	.....	.....	1,400 00
Total	1,002,250	914,600	13,249,600	1,830,050	18,110	272,925	135,605	53,010	45,330	135,090	25,595	500	663,831 50

OFFICIAL STAMPED ENVELOPES AND WRAPPERS.

Name of Department.	NUMBER AND DENOMINATION OF ENVELOPES.								NEWSPAPER-WRAPPERS.		Amount.
	1-cent.	2-cent.	3-cent.	6-cent.	10-cent.	12-cent.	15-cent.	30-cent.	1-cent.	2-cent.	
War	200	.....	411,450	3,000	25	100	20	10	2,500,000	100	$41,634 43
Post-Office	.....	596,000	11,839,950	339,300	.....	.....	.....	.....	.....	.....	387,476 50
Total	200	596,000	12,251,400	342,300	25	100	20	10	2,500,000	100	429,110 93

EDWARD W. BARBER,
Third Assistant Postmaster-General.

No. 9.—*Statement showing the increase in the issue of postage-stamps, stamped envelopes, newspaper-wrappers, and postal cards, including the issues for official use, for the year ended June 30, 1876, over those of the preceding year.*

Description.	1875.		1876.		Increase.		Per cent. increase.	
	Number.	Amount.	Number.	Amount.	Number.	Amount.	Number.	Amount.
Ordinary postage-stamps	682, 342, 470	$18, 271, 479 00	698, 799, 090	$18, 773, 454 00	16, 456, 620	$501, 975 00	2. 41	2. 74
Newspaper and periodical stamps	2, 209, 215	815, 902 47	1, 290, 347	945, 254 75	*918, 868	129, 352 28	*41. 59	15. 85
Ordinary stamped envelopes, plain	72, 285, 150	2, 046, 111 35	82, 467, 000	2, 280, 318 74	10, 181, 850	234, 207 39	14. 08	11. 44
request	54, 631, 000	1, 791, 686 25	64, 554, 500	2, 079, 578 30	9, 923, 500	287, 892 05	18. 16	16. 06
Newspaper-wrappers	22, 850, 250	286, 679 74	18, 498, 750	273, 723 50	*4, 351, 500	*12, 956 24	*19. 04	*4. 50
Postal cards	107, 616, 000	1, 076, 160 00	150, 815, 000	1, 508, 150 00	43, 199, 000	431, 990 00	40. 14	40. 14
Total ordinary issues	941, 934, 085	24, 288, 018 81	1, 016, 424, 687	25, 860, 419 29	74, 490, 602	1, 572, 460 48	7. 90	6. 47
Add official postage-stamps	18, 495, 940	834, 970 25	17, 682, 665	663, 831 50	*813, 275	*171, 138 75	*4. 39	*20. 49
Add official stamped envelopes and wrappers	12, 845, 000	354, 522 18	15, 690, 155	429, 110 93	2, 845, 155	74, 588 75	22. 14	21. 03
Aggregate of all issues	973, 275, 025	25, 477, 511 24	1, 049, 797, 507	26, 953, 421 72	76, 522, 482	1, 475, 910 48	7. 86	5. 79

* Decrease.

EDWARD W. BARBER,
Third Assistant Postmaster-General.

No. 10.—*Statement showing the number of dead-letters received and disposed of during the fiscal year ended June 30, 1876.*

Description.	Received.		Delivered.		Filed.		Outstanding.		Destroyed.	Awaiting return of notice.	Treated as ordinary.	Opened after 30 days and returned to writer.
	Number.	Value.	Number.	Value.	Number.	Value.	Number.	Value.	Number.	Number.	Number.	Number.
Containing money from last fiscal year	9, 872	$13, 244 72										
Containing money received during the year	25, 740	41, 447 17	22, 709	$36, 376 16	6, 737	$6, 420 45	6, 166	$11, 895 28				
Containing drafts, bills of exchange, &c., from last fiscal year	655	130, 263 84										
Containing drafts, bills of exchange, &c., received during the year	12, 889	1, 754, 648 31	12, 321	1, 715, 270 06	507	70, 684 20	716	98, 957 89				
Total	49, 156	1, 939, 604 04	35, 030	1, 751, 646 22	7, 244	77, 104 65	6, 882	110, 853 17				
Containing jewelry and other property, received	20, 367		10, 982		9, 377		8					
Containing receipts, bills of lading, &c., received	25, 788		22, 739		3, 049							
Containing photographs, received	31, 318		23, 497		7, 821							
Containing postage-stamps, received	37, 054		29, 234		7, 820							
Ordinary letters without inclosures, from last fiscal year	24, 000											
Ordinary letters received during the year	2, 885, 979		1, 069, 307				*a*5, 200		†1, 647, 194 ‡188, 278			
Foreign letters from last fiscal year	7, 723											
Foreign letters received during the year	195, 800		200, 434				3, 089					
Held-for-postage letters	307, 559		*b*203, 203							15, 900	*c*20, 255	68, 201
Total	*3, 584, 744		1, 594, 426		35, 311		15, 179		1, 835, 472	15, 900	20, 255	68, 201

* Classified as follows: Ordinary mail letters, 2,355,194; drop, or local, 445,000; returned from foreign countries, (domestic origin,) including circulars, &c., 108,632; returned from hotels, 45,136; held for postage, 307,559; misdirected, 69,797; with no address, 6,945; ship and steamboat letters, (*i. e.*, brought by sea outside the mails,) 2,884; registered, 5,547; foreign origin, (including circulars, &c.,) 195,800; and outstanding and not acted upon from last fiscal year, 10,527; foreign origin, 7,723; and ordinary letters, (unopened,) 24,000 from last fiscal year.

† Letters which could not be returned, circulars, &c. ‡ Returned unclaimed a second time.

a On hand unopened July 1, 1876. *b* Fowarded to address upon receipt of postage. *c* Addressed to foreign countries, misdirected, &c.

EDWARD W. BARBER,
Third Assistant Postmaster-General.

No. 11.—*Statement showing the classification and disposition of letters containing valuable inclosures for the fiscal year ended June 30, 1876.*

	Delivered.	Filed for reclamation.	Outstanding in hands of postmasters.	Total.
Money	22,709	6,737	6,166	35,612
Called "Minor":				
Checks, drafts, bills of exchange, letters of credit, certificates of stock	7,092	292	410	7,794
Money-orders, foreign and domestic	3,394	140	196	3,730
Notes and due-bills	1,068	44	62	1,174
Deeds and land-warrants	406	17	24	447
Mortgages and assignments, releases, satisfaction of, &c.	80	3	5	88
Leases and assignments of, &c.	2	.....	1	3
Passage and railroad tickets	248	11	14	273
Bank-books	14	.....	2	16
Pension-certificates	17	.....	2	19
Called "Sub-Minor":				
Receipts, bills of lading	11,734	1,318	.....	13,052
Legal documents	2,307	126	.....	2,433
Sealed foreign letters inclosed	1,551	237	.....	1,788
Sealed domestic letters inclosed	261	90	.....	351
Pension-papers, registered-letter receipts, &c.	282	14	.....	296
Locks of hair	1,668	477	.....	2,145
Paid notes, cancelled checks, &c.	686	35	.....	721
Photographs	23,497	7,821	.....	31,318
Postage-stamps	33,512	3,542	.....	37,054
Miscellaneous	5,260	752	.....	6,012
Called "Property":				
Jewelry	959	648	6	1,613
Dry-goods and clothing	1,127	1,145	.....	2,272
Books, pictures, and music	3,520	2,195	.....	5,715
Merchandise and samples	2,054	2,275	.....	4,329
Cutlery and instruments	131	102	.....	233
Manuscripts	220	219	.....	439
Miscellaneous	2,971	2,793	2	5,766
	126,770	31,033	6,890	164,693

EDWARD W. BARBER,
Third Assistant Postmaster-General.

No. 12.—*Statement showing number, contents, and disposition of registered letters received during the fiscal year ended June 30, 1876.*

	Delivered.	Filed.	Outstanding or not acted upon.	Total.
Money-letters, including 56 from last fiscal year	649	50	63	762
Minor letters:				
Drafts, including 1 from last fiscal year	140	24	1	165
Money-orders	5	2	.....	7
Notes	6	.....	.....	6
Bank-books	1	.....	.....	1
Passage-tickets	15	2	.....	17
Deeds	1	1	.....	2
Sub-minor letters:				
Photographs	43	12	.....	55
Receipts	9	.....	.....	9
Powers of attorney	11	1	.....	12
Stamps	8	1	.....	9
Miscellaneous	85	2	.....	87
Property-letters and packages:				
Jewelry, including 2 from last fiscal year	44	13	6	63
Merchandise, including 7 from last fiscal year	41	10	2	53
Without valuable inclosures	490	127	.....	617
Foreign letters, including 135 from last fiscal year	3,874	.....	9	3,883
	5,422	245	81	5,748

EDWARD W. BARBER,
Third Assistant Postmaster-General.

No. 13.—*Number of registered letters transmitted through the mails from each State and Territory in the United States during the fiscal year ended June 30, 1876.*

States and Territories.	Quarter ended September 30, 1875.			Quarter ended December 31, 1875.			Quarter ended March 31, 1876.			Quarter ended June 30, 1876.			Total.			Grand total of letters registered for year ended June 30, 1876.	Fees received.
	Domestic.	Foreign.	Free.	Domestic.	Foreign.	Free.	Domestic.	Foreign.	Free.	Domestic.	Foreign.	Free.	Domestic.	Foreign.	Free.		
Alabama	6,552	45	993	8,220	56	1,186	11,132	73	1,447	9,661	69	1,676	35,565	243	5,302	41,110	$3,570 80
Arkansas	4,947	20	636	7,147	41	812	9,327	55	532	8,647	135	786	30,068	251	2,766	33,085	3,031 90
California	17,045	3,482	1,262	22,097	4,267	1,465	21,262	3,642	1,274	20,612	3,335	1,211	81,016	14,726	5,212	100,954	9,574 20
Colorado	6,195	137	607	6,358	197	753	6,672	149	417	6,752	141	313	25,977	624	2,090	28,691	2,660 10
Connecticut	9,129	560	28,246	10,964	723	32,507	12,390	634	35,221	10,825	490	33,412	43,308	2,407	130,386	176,101	4,571 50
Delaware	1,340	7	56	1,390	18	143	1,571	18	65	1,517	16	70	5,818	59	334	6,211	587 70
Florida	3,330	23	594	4,453	35	463	5,992	53	462	5,711	27	582	19,486	138	2,101	21,725	1,962 40
Georgia	10,377	64	1,556	13,410	104	1,697	16,572	91	1,674	12,787	54	1,553	53,146	313	6,480	59,939	5,345 90
Illinois	44,010	2,237	6,271	56,280	2,490	7,258	67,745	2,504	6,400	59,557	2,071	7,111	227,592	9,302	27,040	263,934	23,689 40
Indiana	25,624	252	2,534	33,386	266	2,955	43,478	323	2,934	35,421	223	3,277	137,909	1,064	11,700	150,673	13,897 30
Iowa	29,673	291	4,327	36,970	431	4,447	44,357	550	4,534	37,952	403	4,690	148,952	1,675	17,998	168,625	15,062 70
Kansas	11,138	66	1,531	14,355	136	1,816	18,797	142	1,920	16,648	102	1,740	60,938	446	7,007	68,391	6,138 40
Kentucky	10,994	118	916	12,204	154	1,286	16,041	120	1,127	16,085	106	906	55,324	498	4,235	60,057	5,582 20
Louisiana	8,522	419	769	11,639	528	787	12,635	701	781	13,029	550	975	45,825	2,198	3,312	51,335	4,802 30
Maine	15,873	483	1,352	18,599	547	1,406	18,436	507	1,085	17,015	454	960	69,923	1,991	4,803	76,717	7,191 44
Maryland	8,485	409	670	9,552	415	605	11,092	424	532	9,636	354	692	38,765	1,602	2,499	42,866	4,036 70
Massachusetts	23,209	3,503	12,963	29,518	4,381	15,582	30,023	3,424	15,691	28,413	3,172	14,744	111,163	14,480	58,960	184,603	12,564 30
Michigan	27,913	1,550	3,604	33,465	1,746	4,077	36,688	1,598	3,520	35,916	1,474	3,063	133,982	6,358	14,264	154,604	14,034 00
Minnesota	14,030	336	1,498	20,610	542	2,014	20,437	603	1,762	19,628	411	1,394	74,705	1,892	6,668	83,265	7,659 70
Mississippi	7,112	44	1,340	9,237	49	1,527	12,926	35	1,276	11,474	55	1,668	40,049	183	5,811	46,043	4,023 20
Missouri	26,918	538	2,174	33,487	648	2,635	42,055	701	2,683	38,216	631	2,804	140,676	2,518	10,296	153,490	14,319 40
Nebraska	8,347	147	968	11,367	189	1,204	12,360	208	1,061	11,870	193	1,000	43,944	737	4,233	48,914	4,468 10
Nevada	3,606	628	240	5,170	804	226	4,284	638	188	3,913	640	172	16,973	2,710	826	20,509	1,968 30
New Hampshire	7,785	338	601	9,283	325	773	9,936	387	730	8,946	356	585	35,950	1,406	2,869	40,043	3,745 60
New Jersey	11,633	921	670	12,200	1,223	764	13,259	1,023	636	12,643	779	596	49,735	3,946	2,666	56,347	5,368 10
New York	84,333	12,668	39,358	98,151	14,636	40,278	103,402	13,493	46,909	93,449	12,286	43,536	379,335	53,083	170,081	602,499	43,241 80
North Carolina	13,879	16	1,924	15,620	16	1,688	18,226	67	1,951	17,077	8	2,070	64,802	107	7,633	72,542	6,490 90
Ohio	39,427	962	5,371	50,651	1,201	5,446	61,916	1,304	5,585	52,302	916	5,175	204,296	4,383	21,577	230,256	20,867 90
Oregon	3,259	55	294	4,513	27	359	5,231	32	382	3,933	22	369	16,936	136	1,404	18,476	1,707 20
Pennsylvania	51,812	2,483	3,087	62,090	2,743	3,097	70,457	2,913	2,953	67,384	2,667	3,344	251,743	10,806	12,391	274,940	26,254 90
Rhode Island	3,343	512	138	3,918	542	132	4,005	470	147	3,552	397	146	14,818	1,921	563	17,302	1,673 90
South Carolina	6,525	57	669	8,419	80	762	9,259	89	787	8,722	85	602	32,925	311	2,820	36,056	3,223 60
Tennessee	11,029	75	1,290	12,624	97	1,259	16,320	113	1,271	15,706	129	1,282	55,679	414	5,102	61,195	5,609 30
Texas	13,952	355	1,686	18,380	493	1,842	23,992	565	1,914	21,025	439	2,164	77,349	1,852	7,606	86,807	7,920 10
Vermont	10,078	420	687	12,313	303	716	13,086	333	895	11,506	434	930	46,983	1,490	3,228	51,701	4,847 30
Virginia	13,863	96	1,335	15,695	126	1,323	18,187	124	1,136	16,797	86	1,409	64,542	432	5,203	70,177	6,497 40
West Virginia	7,834	60	451	9,000	50	451	10,405	43	606	9,253	37	556	36,492	190	2,064	38,746	3,668 20
Wisconsin	24,446	747	2,924	36,309	911	2,921	36,455	692	3,049	33,925	810	3,008	131,135	3,160	11,902	146,197	13,429 50
Alaska	56	.....	.....	34	.....	.....	67	2	.....	5	.....	2	162	2	2	166	16 40

No. 13.—*Number of registered letters transmitted through the mails, &c.*—Continued.

States and Territories.	Quarter ended September 30, 1875.			Quarter ended December 31, 1875.			Quarter ended March 31, 1876.			Quarter ended June 30, 1876.			Total.			Grand total of letters registered for year ended June 30, 1876.	Fees received.
	Domestic.	Foreign.	Free.	Domestic.	Foreign.	Free.	Domestic.	Foreign.	Free.	Domestic.	Foreign.	Free.	Domestic.	Foreign.	Free.		
Arizona	894	1	52	1,235	9	52	1,543	4	70	1,113	6	74	4,785	20	248	5,053	$480 50
Dakota	1,711	31	131	2,501	64	165	2,906	57	244	2,428	54	174	9,546	206	714	10,466	975 20
District of Columbia	4,317	949	14,879	5,119	1,108	16,173	5,367	992	13,950	4,754	977	12,675	19,557	4,026	57,677	81,260	2,358 30
Idaho	1,677	36	5	1,996	37	19	1,738	29	26	1,765	24	94	7,176	126	144	7,446	730 20
Indian	903	13	53	1,166	7	72	1,410	11	52	1,165	7	52	4,644	38	229	4,911	468 20
Montana	1,810	14	179	2,175	39	181	2,296	35	187	1,945	20	166	8,226	108	713	9,047	833 40
New Mexico	2,302	8	85	1,624	5	71	1,942	11	126	1,957	8	113	7,825	32	395	8,252	785 70
Utah	3,350	76	253	3,913	51	263	4,821	87	232	4,038	62	286	16,122	276	1,034	17,432	1,639 80
Washington	1,425	60	131	1,958	58	126	2,426	58	131	1,924	69	127	7,733	245	515	8,493	797 80
Wyoming	2,159	20	212	2,590	30	228	2,212	30	134	2,370	24	154	9,331	104	728	10,163	943 50
Total	648,171	36,332	152,572	803,355	42,938	165,922	916,436	40,157	170,669	830,969	35,808	164,488	3,198,931	155,235	653,651	4,007,817	335,416 60

RECAPITULATION.

Total domestic	3,198,931
Total foreign	155,235
Total free	653,651
Grand total	4,007,817
Total fees received	$335,416 60

EDWARD W. BARBER,
Third Assistant Postmaster-General.

CONTRACT-OFFICE, POST-OFFICE DEPARTMENT,
Washington, D. C., November 11, 1876.

SIR: For a statement of the mail-service for the contract-year ended June 30, 1876, &c., I have the honor to refer you to the tables hereto annexed.

Table A exhibits the character of the service, the length of routes, the number of miles of transportation, and the cost thereof at the close of the contract-year.

Table B exhibits the railroad-service as in operation on the 30th of June, 1876; also the cost per mile in each State and Territory.

Table C exhibits the steamboat-service as in operation on the 30th of June, 1876.

Table D shows the increase and decrease of mail-transportation and cost in the several States and Territories during the year ended June 30, 1876.

Table E shows the weight of the mails, the speed with which they are conveyed, the accommodations for mails and agents, the trips per week, and the rates of pay per mile per annum on railroad-routes in States in which the contract-term expired June 30, 1876, and also in other States and Territories, the returns having been obtained with a view to the re-adjustment of the pay in accordance with the act of March 3, 1873, and used also in accordance with the act of July 12, 1876, in the case of re-adjustments taking effect on and after July 1, 1876. This table is accompanied with an alphabetical index of the titles of the companies carrying the mails.

Table F shows the re-adjustment of the rates of pay per mile on railroad-routes in which the contract-term expired June 30, 1876, and also in other States and Territories, and on certain new routes the adjustment of the rates based upon returns of the weight of the mails, the speed with which they are conveyed, the accommodations for mails and agents, and the number of trips per week, in accordance with the act of March 3, 1873, and with the act of July 12, 1876, in the case of re-adjustments taking effect on and after July 1, 1876. This table also is accompanied with an alphabetical index of the titles of the companies carrying the mails.

Table G is a statement of the number, description, and prices of mail-bags, mail-bag-catchers, mail locks and keys purchased, and of the expense incurred on account thereof, during the fiscal year ended June 30, 1876.

Table H is a list of railway post-office lines in the United States June 30, 1876, showing the increase in the service since June 30, 1875.

Very respectfully, your obedient servant,

THOS. J. BRADY,
Second Assistant Postmaster-General.

Hon. JAMES N. TYNER,
Postmaster-General.

A.—*Table of mail-service for the year ended June 30, 1876, as exhibited by the state of the arrangements at the close of the year.*

[The entire service and pay on each route are set down to the State under which the route is numbered, though extending sometimes into other States, instead of being divided among the States in which the different portions lie.]

States and Territories.	Length of routes.	Annual transportation and cost.						Total annual transportation by celerity, certainty, and security.	Total annual transportation by steamboat.	Total annual transportation by railroad.	Total annual transportation.	Total annual cost.
		Celerity, certainty, and security.		By steamboat.		By railroad.						
	Miles.	*Miles.*	*Dollars.*	*Miles.*	*Dollars.*	*Miles.*	*Dollars.*	*Miles.*	*Miles.*	*Miles.*	*Miles.*	*Dollars.*
Maine	4,568	3,454	90,166	32	700	1,082	151,968	1,590,508	12,480	1,054,325	2,657,313	242,834
New Hampshire	1,734	1,002	31,094	60	1,850	672	66,911	491,536	18,200	741,677	1,251,413	99,855
Vermont	2,258	1,570	50,417	.....	.....	688	106,749	798,573	.....	678,525	1,477,098	157,166
Massachusetts	2,808	917	56,001	30	2,500	1,861	316,511	639,613	12,840	2,827,817	3,480,270	375,012
Rhode Island	568	214	9,779	198	16,000	156	19,283	114,972	135,969	279,513	530,454	45,062
Connecticut	1,672	606	26,690	.....	.....	1,066	162,048	346,736	.....	1,839,545	2,186,281	188,738
New York	11,981	5,967	255,372	151	4,953	5,863	1,306,082	3,024,640	72,384	9,105,376	12,202,400	1,566,407
New Jersey	2,312	906	33,988	41	1,883	1,365	191,434	465,890	35,776	2,064,335	2,566,001	227,305
Pennsylvania	14,113	9,592	285,938	88	4,370	4,433	466,514	3,937,737	46,020	6,158,207	10,141,964	756,822
Delaware	443	175	6,304	.....	.....	268	23,854	86,852	.....	227,523	314,375	30,158
Maryland	3,052	1,721	67,595	190	3,750	1,141	251,333	994,253	61,360	1,817,123	2,872,736	322,678
West Virginia	5,210	4,736	71,355	250	13,700	224	41,086	1,148,160	103,740	239,716	1,491,616	126,141
Virginia	10,390	7,684	133,577	936	32,100	1,770	245,702	2,154,694	327,288	2,035,681	4,517,663	411,379
North Carolina	10,062	8,376	96,660	348	11,329	1,338	119,985	1,458,236	95,888	1,265,842	2,819,966	227,974
South Carolina	3,978	2,827	35,139	45	1,500	1,106	90,114	373,152	8,436	1,092,221	1,473,809	126,753
Georgia	6,985	4,413	62,727	206	5,569	2,366	210,631	695,604	43,264	2,257,421	2,996,289	278,927
Florida	6,002	2,200	33,497	3,342	55,916	460	28,563	335,318	457,145	407,372	1,199,835	117,976
Alabama	7,986	5,940	92,218	.....	.....	2,046	183,354	1,048,376	.....	1,824,381	2,872,757	275,572
Mississippi	6,126	4,729	83,755	262	4,800	1,135	120,770	853,970	54,496	1,069,540	1,978,006	209,325
Louisiana	5,215	3,701	97,851	994	63,607	520	57,268	770,310	293,800	468,985	1,533,095	218,726
Texas	13,973	11,639	284,644	835	92,310	1,499	150,457	2,608,866	252,703	1,112,489	3,974,058	527,411
Arkansas	8,333	6,719	145,354	1,164	48,000	450	31,686	1,680,375	296,400	258,487	2,235,262	225,040
Missouri	14,094	9,645	179,886	575	26,250	3,874	536,945	2,623,736	179,400	3,355,359	6,158,495	743,091
Tennessee	6,605	5,202	74,496	159	6,943	1,244	162,692	1,037,990	53,456	1,347,226	2,438,672	244,131
Kentucky	7,727	5,522	89,955	894	40,800	1,311	142,440	1,347,918	354,016	1,198,903	2,900,837	273,195
Ohio	12,519	6,731	162,618	281	13,800	5,507	979,697	2,368,622	103,771	5,875,840	8,348,233	1,156,115
Indiana	7,775	4,696	87,328	.....	.....	3,079	353,246	1,198,131	.....	3,333,632	4,531,763	440,574
Illinois	11,588	4,746	106,162	.....	.....	6,842	903,510	1,575,574	.....	7,369,685	8,945,259	1,009,672
Michigan	9,359	5,167	127,271	793	18,580	3,399	295,124	1,633,537	184,045	4,355,508	6,173,090	440,975
Wisconsin	7,945	5,265	89,732	.....	.....	2,680	271,712	1,422,488	.....	2,600,692	4,023,180	361,444
Iowa	10,757	7,184	135,345	.....	.....	3,573	373,605	2,056,093	.....	2,540,310	4,596,403	508,950
Minnesota	7,273	5,136	83,905	.....	.....	2,137	162,529	1,155,456	.....	1,679,526	2,834,982	246,434
Nebraska	6,896	5,471	96,740	.....	.....	1,425	376,805	1,258,158	.....	999,249	2,257,407	473,635

Kansas	11,710	9,140	167,861			2,570	272,778	2,322,108		1,989,698	4,304,806	440,639
Nevada	2,938	2,095	143,865			143	8,304	746,980		89,181	836,161	159,169
California	10,439	7,397	385,010	1,012	37,900	2,030	288,081	2,574,012	258,360	1,502,015	4,334,387	710,231
Oregon	3,979	3,491	83,485	240	30,442	248	22,340	570,296	149,760	154,570	874,556	136,267
Washington Territory	3,056	1,193	39,715	1,757	67,613	106	6,336	221,968	93,536	65,894	381,418	113,664
Idaho Territory	1,422	1,422	87,259					402,334			402,334	87,259
Montana Territory	1,879	1,879	97,797					531,398			531,398	97,797
Dakota Territory	2,330	2,269	61,958			61	4,918	541,164		38,364	579,528	66,876
Wyoming Territory	648	648	23,115					116,104			116,104	23,115
Utah Territory	3,130	2,939	285,051			191	12,944	1,413,897		127,932	1,541,929	997,995
Colorado Territory	2,907	2,488	119,943			419	26,795	764,828		298,487	1,063,315	146,738
Indian Territory	1,123	1,123	31,681					266,812			266,812	31,681
New Mexico Territory	2,192	2,192	156,346					660,774			660,774	156,346
Arizona Territory	2,438	2,438	84,896					395,304			395,304	84,896
Total	281,798	194,567	5,051,541	14,883	606,465	72,348	9,543,134	54,824,003	3,704,533	77,741,172	136,269,708	15,201,140
Railway-post-office clerks												1,278,340
Route-agents												975,280
Mail-route messengers												145,610
Local agents												104,910
Mail-messengers												655,768
Aggregate												18,361,048

THOS. J. BRADY,
Second Assistant Postmaster-General.

B.—*Railroad-service as in operation on the 30th of June, 1876.*

Number of route.	State and termini.	Corporate title of company carrying the mail.	Distance.	Total distance in each State.	Number of trips per week.	Annual pay.	Annual pay in each State.	Annual cost per mile on each route.	Remarks.
	MAINE.		*Miles.*	*Miles.*		*Dollars.*	*Dollars.*	*Dollars.*	
1	Augusta to Skowhegan	Maine Central	22 17		18 6	4,610 00		140 00 90 00	
2	Portland to Bangor	do	73.28 55		6 6	25,199 00		175 00 225 00	
3	Newport to Dexter	do	14		12	840 00		50 00	$140 per annum included for mail-messenger service.
4	Calais to Princeton	Saint Croix and Penobscot	21		6	2,100 00		50 00	$1,050 per annum included for mail-messenger service.
5	Portland to Augusta Branch, Brunswick to Bath	Maine Central	64 9		12 12	14,520 00		210 00 120 00	
6	Portland to Canada Line	Grand Trunk	92 73		12 6	22,770 00		138 00	
7	Portland to Rochester, N. H.	Portland and Rochester	52		12	380 00		65 00	$420 per annum included for mail-messenger service.
9	Bangor to Vanceborough	Consolidated European and North American.	118.25		6	20,693 75		175 00	
10	Old Town to Abbot	do	54.2		6	2,981 00		55 00	
11	Belfast to Burnham Village	Maine Central	34.19		12	1,846 20		54 00	
12	Portland to Lunenburgh Station, Vt	Portland and Ogdensburgh	116.55		12	17,482 50		150 00	Pay estimated on 43.7 miles.
13	Bath to Rockland	Knox and Lincoln	50		12	6,000 00		100 00	$1,000 per annum included for ferriage.
14	Houlton to New Brunswick Line	New Brunswick and Canada	3.82		6	191 00		50 00	
34	Farmington to Brunswick	Maine Central	71.5		6	5,412 50		75 00	$50 per annum included for mail-messenger service.
124	Portland to Portsmouth, N. H.	Eastern	52		18	14,716 00		283 00	
221	Salmon Falls, N. H., to Portland, Me.	Boston and Maine	44.18		12	5,798 62		131 25	
231	West Waterville to North Anson	Somerset	25.7		6	1,285 00		50 00	Pay estimated on 5.1 miles.
244	Bangor to Bucksport	Consolidated European and North American.	19.35		12	1,722 15		89 00	
				1,082 02			151,967 72		
	NEW HAMPSHIRE.								
251	Concord to Nashua	Concord	36		18	8,100 00		225 00	

250	Concord to Wells River, Vt	Boston, Concord and Montreal	52		18	13,160 00		125 00	$1,410 per annum included for mail-messenger service.
			42		12				
253	Concord to White River Junction, Vt.	Northern New Hampshire	69		12	14,910 00		190 00	$1,150 per annum included for mail-messenger service.
	Branch, Franklin to Bristol		13		6			50 00	
254	Concord to Claremont Junction	Concord and Claremont	54.99		12	6,998 80		120 00	$400 per annum included for mail-messenger service.
255	Concord to Portsmouth	Concord	60		12	3,600 00		60 00	
256	Manchester to North Weare	do	20.5		6	1,025 00		50 00	
257	Nashua to Greenfield	Boston and Lowell and Nashua and Lowell.	27		12	1,755 00		65 00	
258	Contoocook Village to Hillsborough Bridge.	Concord and Claremont	15		6	750 00		50 00	
259	Dover to Alton Bay	Boston and Maine	28		6	1,400 00		50 00	
260	Brock's Crossing to North Conway	Portsmouth, Great Falls and Conway.	6		12	4,256 60		60 00	$50 per annum included for mail-messenger service.
			64.11		7				
261	Groveton to Wells River, Vt	Boston, Concord and Montreal	54		12	4,860 00		90 00	
262	Hookset to Pittsfield	Concord	20		11	1,000 00		50 00	
351	Wolfborough Junction to Wolfborough.	Eastern	12.11		6	363 30		30 00	
352	Nashua to Acton	Nashua, Acton and Boston	23.44		6	937 60		40 00	
359	Wing Road to Fabyan House	Boston, Concord and Montreal	13.85		6	742 50		50 00	$50 per annum included for mail-messenger service.
360	Portsmouth to Dover	Eastern	11.64		6	582 00		50 00	Pay estimated.
371	Nashua to Rochester	Nashua and Rochester	49.40		6	2,470 00		50 00	Do.
				672.04			66,910 80		
	VERMONT.								
401	Burlington to Rouse's Point, N. Y.	Central Vermont	24.5		15	10,415 00		210 00	
			31		6			170 00	
402	White River Junction to Derby Line.	Connecticut and Passumpsic Rivers and Massawippi Valley.	114.87		6	20,102 25		175 00	
403	Windsor to Burlington	Central Vermont	93		15	25,240 00		218 00	Pay estimated on branch.
			26		15			178 00	
	Branch, Montpelier to Barre		6.76		6			50 00	
405	Bellows Falls to Windsor	do	25		12	5,125 00		205 00	
406	Bellows Falls to Burlington	do	52		6	20,449 00		157 00	
			67.5		18			182 00	
407	Brattleborough to Bellows Falls	do	24		12	4,920 00		205 00	
408	Saint Albans to Canada Line	do	17		6	1,445 00		85 00	
409	Saint Albans to Richford	do	28.66		6	2,149 50		75 00	
410	Lunenburgh Junction to Johnson.	Portland and Ogdensburgh	78.81		6	9,851 25		125 00	Pay estimate l on 14.05 miles.
522	Richford to Newport	Missisquoi and Clyde Rivers	31.38		6	3,138 00		100 00	
525	Leicester Junction to Ticonderoga Station.	Central Vermont	14.5		6	1,450 00		100 00	
528	Wells River to Montpelier	Montpelier and Wells River	38.62		6	1,737 90		45 00	
532	White River Junction to Woodstock.	Woodstock	14.53		6	726 50		50 00	
				688 13			106,749 40		

B.—*Railroad-service as in operation on the 30th of June*, 1876—Continued.

Number of route.	State and termini.	Corporate title of company carrying the mail.	Distance.	Total distance in each State.	Number of trips per week.	Annual pay.	Annual pay in each State.	Annual cost per mile on each route.	Remarks.
	MASSACHUSETTS.		*Miles.*	*Miles.*		*Dollars.*	*Dollars.*	*Dollars.*	
601	Boston to Portsmouth, N. H.	Eastern	56.5		24	16,667 50		295 00	
602	Boston to Salmon Falls, N. H.	Boston and Maine	71.16		12	13,901 67		193 25	
	Branch, Rollingsford to Great Falls.		3		12			50 00	
603	Boston to Nashua, N. H.	Boston and Lowell and Nashua and Lowell.	42		18	9,660 00		230 00	
604	Boston to Fitchburgh	Fitchburgh	52		18	11,440 00		220 00	
605	Boston to Albany, N. Y	Boston and Albany	101		26	109,123 00		680 00	
			102		13			396 50	
606	Boston to Bellingham	New York and New England	31.77		15	2,166 20		60 00	$260 per annum included for mail-messenger service.
607	Boston to Southbridge	do	70		12	7,560 00		108 00	
608	Boston to Providence, R. I	Boston and Providence	23		24	6,776 00		154 00	
			21		12				
609	Boston to Plymouth	Old Colony	11.28		42	6,767 50		150 00	$895 per annum included for mail-messenger service.
			26.72		12			150 00	
	Branch, Atlantic to West Quincy		3.45		6			50 00	
610	Boston to Medford	Boston and Maine	5.5		12	335 00		50 00	$60 per annum included for mail-messenger service.
615	Boston to West Lynn Depot	Eastern	10		12	500 00		50 00	
616	Boston to Dedham	Boston and Providence	11		12	550 00		50 00	
617	Grafton Depot to Millbury	Boston and Albany	4		12	200 00		50 00	
618	Salem to Gloucester	Eastern	16		18	1,072 00		67 00	
619	Salem to Marblehead	do	4		12	200 00		50 00	
620	Salem to Lawrence	do	20		6	800 00		40 00	
621	Georgetown to Haverhill	Boston and Maine	6.5		12	325 00		50 00	
622	Lawrence to Manchester, N. H.	Manchester and Lawrence	28		18	4,564 00		163 00	
623	Lowell to Lawrence	Boston and Lowell and Nashua and Lowell.	14		21	1,050 00		50 00	$350 per annum included for mail-messenger service.
624	Winchester to Woburn	do	3		12	150 00		50 00	
625	Somerville Station to Concord	do	15.96		12	798 00		50 00	
626	South Acton Depot to Hudson	Fitchburgh	9		12	500 00		50 00	$50 per annum included for mail-messenger service.
627	Ayer to Lowell	Boston and Lowell and Nashua and Lowell.	17		15	850 00		50 00	
628	Ayer to Greenville, N. H.	Fitchburgh	23		12	1,437 50		62 50	

629	Auburndale Station to Newton Lower Falls.	Boston and Albany	2		6	100 00		50 00	
630	Natick to Saxonville	do	4		12	200 00		50 00	
631	South Framingham to Pratt's Junction.	Boston, Clinton and Fitchburgh	29		18	2,610 00		90 00	
632	South Framingham to Milford	Boston and Albany	12		24	1,020 00		60 00	$300 per annum included for mail-messenger service.
633	Canton Depot to Stoughton	Boston and Providence	4		12	250 00		50 00	$50 per annum included for mail-messenger service.
634	South Braintree Junction to Newport, R. I.	Old Colony	61.75		12	9,575 00		140 00	$930 per annum included for mail-messenger service.
635	South Abington to Bridgewater	do	7.75		6	390 00		40 00	$80 per annum included for mail-messenger service.
636	Braintree Depot to Cohasset	South Shore	12		12	1,400 00		56 00	$704 per annum included for mail-messenger service.
637	Middleborough to Hyannis	Old Colony	47		12	8,191 00		153 00	$1,000 per annum included for mail-messenger service.
638	Yarmouth Port to Provincetown	do	45.08		12	9,319 44		118 00	$4,000 per annum included for mail-messenger service.
639	New Bedford to West Wareham	New Bedford	16.25		15	1,093 75		50 00	$281.25 per annum included for mail-messenger service.
640	Taunton to Middleborough	Old Colony	10.54		30	527 00		50 00	
641	Taunton to Mansfield Junction	New Bedford	12		36½	2,100 00		125 00	$600 per annum included for mail-messenger service.
642	Taunton to New Bedford	do	20.05		27	3,339 00		133 00	$612.50 per annum included for mail-messenger service.
643	Worcester to Nashua, N. H	Worcester and Nashua	46.25		18	4,948 75		107 00	
644	Sterling Junction to Fitchburgh	Boston, Clinton and Fitchburgh	14		18	1,260 00		90 00	
645	Fitchburgh to Bellows Falls, Vt	Cheshire	64		18	10,240 00		160 00	
646	Fitchburgh to Hoosac Tunnel Branch, Greenfield to Turner's Falls.	Fitchburgh	69 18 5		6 6 6	14,860 00		170 00 160 00 50 00	
647	Palmer to Miller's Falls	Central Vermont	35		12	3,500 00		100 00	
648	Springfield to South Vernon Junction, Vt.	Connecticut River	50		15	11,800 00		230 00	$300 per annum included for side supply of Chicopee Falls.
649	South Vernon Junction, Vt., to Keene, N. H.	Cheshire	24		12	1,500 00		62 50	
650	Pittsfield to North Adams	Boston and Albany	21		18	1,575 00		60 00	$315 per annum included for mail-messenger service.
651	Gloucester to Pigeon Cove	Eastern	6.5		12	450 00		50 00	$125 per annum included for mail-messenger service.
652	Wakefield to Newburyport	Boston and Maine	30.5		12	1,525 00		50 00	
653	South Braintree Junction to Fall River.	Old Colony	34		12	2,700 00		50 00	$1,000 per annum included for mail-messenger service.
654	East Salisbury to Amesbury	Eastern	4		12	250,000		50 00	$50 per annum included for mail-messenger service.
655	Palmer to Winchendon	Boston and Albany	15.75 7.96 25.54		24 18 12	2,462 50		50 00	
656	Mansfield to South Framingham	Boston, Clinton and Fitchburgh	22		6	1,320 00		60 00	

B.—*Railroad-service as in operation on the 30th of June*, 1876—Continued.

Number of route.	State and termini.	Corporate title of company carrying the mail.	Distance.	Total distance in each State.	Number of trips per week.	Annual pay.	Annual pay in each State.	Annual cost per mile on each route.	Remarks.
	MASSACHUSETTS—Continued.		*Miles.*	*Miles.*		*Dollars.*	*Dollars.*	*Dollars.*	
657	Winchendon to Peterborough, N. H	Boston, Barre and Gardner, lessees of Monadnock Railroad.	16.37	.....	6	1,178 64	.....	72 00	
658	Springfield to Athol Depot	Springfield, Athol and Northeastern.	49.98	.....	6	2,998 86	.....	57 00	$150 per annum included for mail-messenger service.
659	South Framingham to Lowell	Boston, Clinton and Fitchburgh	29	.....	12	1,798 00	.....	62 00	
660	Worcester to Winchendon	Boston, Barre and Gardner	37	.....	12	3,237 50	.....	87 50	
661	Holyoke to Westfield	New Haven and Northampton	10.53	.....	12	526 50	.....	50 00	
662	Milford to Bellingham Junction	Providence and Worcester	5	.....	12	250 00	.....	50 00	
736	Milford to Ashland	.....do	11.68	.....	6	584 00	.....	50 00	
737	Cohasset Narrows to Wood's Hole	Old Colony	17.67	.....	6	1,311 51	.....	53 00	$375 per annum included for mail-messenger service.
741	Wenham to Essex	Eastern	5.55	.....	6	277 50	.....	50 00	
742	Lynn to Marblehead	.....do	6.05	.....	6	302 50	.....	50 00	
743	Wakefield to Peabody	.....do	8.54	.....	6	427 00	.....	50 00	
744	Miller's Falls to Brattleborough, Vt.	Central Vermont	21	.....	18	3,937 50	.....	187 50	
745	Newton Junction to Merrimac	Boston and Maine	5.05	.....	6	372 50	.....	50 00	$120 per annum included for mail-messenger service.
746	Taunton to Attleborough	New Bedford	16.67	.....	28	1,250 25	.....	75 00	
747	Cohasset to Kingston	Duxbury and Cohasset	20.88	.....	6	1,044 00	.....	50 00	
753	Ashburnham Depot to Ashburnham.	Ashburnham	2.89	.....	6	144 50	.....	50 00	
754	New Bedford to Fall River	Fall River	15	.....	6	750 00	.....	50 00	
755	North Brookfield to East Brookfield.	Boston and Albany, lessees of North Brookfield Railroad.	4.41	.....	6	220 50	.....	50 00	Pay estimated.
				1,861.39			316,511 07		
	RHODE ISLAND.								
801	Providence to Worcester, Mass	Providence and Worcester	44	.....	18	6,340 00	.....	110 00	$1,500 per annum included for mail-messenger service.
802	Providence to New London, Conn	Stonington and Providence	63.75	.....	22½	9,243 75	.....	145 00	
803	Providence to Bristol	Providence, Warren and Bristol	14.6	.....	12	1,926 00	.....	60 00	$1,050 per annum included for mail-messenger service.
804	Warren to Fall River, Mass	Fall River, Warren and Providence	7	.....	12	420 00	.....	60 00	
823	Providence to Pascoag	Providence and Spring[illegible]	23.19		6	1,156 00		50 00	

825	Wickford Landing to Wickford Junction.	Newport and Wickford Railroad and Steamboat Company.	3.4	.....	15½	197 90	.....	58 00	
				155.87			19,282 95		
	CONNECTICUT.								
901	Norwich to Worcester, Mass	New York and New England, lessees of Norwich and Worcester Railroad.	60	.....	12	5,100 00	.....	85 00	
902	New London to Palmer, Mass	Central Vermont	30 35	....	23 18	7,600 00	.....	120 00	
903	Middletown to Berlin Depot	New York, New Haven and Hartford.	10	.....	18	770 00	.....	52 00	$250 per annum included for mail messenger service.
904	New Haven to New London	do	50	.....	23	8,817 00	.....	175 00	$67 per annum included for mail-messenger service.
905	New Haven to Springfield, Mass Branch, Windsor Locks to Suffield.	do	63.833 4.76	....	34 12	31,963 16	.....	497 00 50 00	
906	New Haven to Williamsburgh, Mass. Branch, Farmington to New Hartford.	New Haven and Northampton	85.48 16.56	....	12 12	14,504 80	.....	160 00 50 00	
907	New Haven to New York	New York, New Haven and Hartford.	76.333	.....	31	45,418 33	.....	595 00	
908	Bridgeport to Winsted Branch, Waterbury to Watertown.	Naugatuck	62 5.75	....	14 12	7,753 50	.....	118 00 50 00	$50 per annum included for mail-messenger service.
909	Bridgeport to Pittsfield, Mass. Branch, Van Deusenville to State Line. Branch, Danbury to Brookfield Junction.	Housatonic	110.55 11.06 5.75	....	12 6 6	11,338 30	.....	96 00 50 00 30 00	
910	South Norwalk to Danbury Branch, Branchville to Ridgefield. Branch, Bethel to Hawleyville	Danbury and Norwalk	23.5 4 6.01	....	24½ 12 12	3,085 50	.....	110 00 50 00 50 00	
911	Waterbury to Providence, R. I	Hartford, Providence and Fishkill.	122.5	.....	22½	9,800 00	.....	80 00	
912	Vernon Depot to Rockville Side-supply of Vernon	do	4.625	.....	18	500 00	.....	50 00	$268.75 per annum included for mail-messenger service.
913	New Haven to Willimantic	Boston and New York Air Line	24 32	....	12 6	2,800 00	.....	50 00	
914	Hartford to Saybrook Point	Connecticut Valley	43.16	.....	12	2,589 60	.....	60 00	
915	New Haven to Ansonia	New Haven and Derby	13.5	.....	12	742,50	.....	55 00	
916	Hartford to Millerton, N. Y	Connecticut Western	69.18	.....	9½	3,459 00	.....	50 00	
917	Litchfield to Hawleyville	Shepaug	32.25	.....	12	1,935 00	.....	60 00	
975	East Thompson to Willimantic	New York and New England	33.68	.....	6	2,116 80	.....	60 00	$96 per annum included for mail-messenger service.
991	Hartford to Springfield, Mass	Connecticut Valley and Springfield	31.1	.....	6	1,555 00	.....	50 00	Pay estimated.
				1,066 58			162,048 49		

B.—*Railroad-service as in operation on the 30th of June*, 1876—Continued.

Number of route.	State and termini.	Corporate title of company carrying the mail.	Distance.	Total distance in each State.	Number of trips per week.	Annual pay.	Annual pay in each State.	Annual cost per mile on each route.	Remarks.
	NEW YORK.		*Miles.*	*Miles.*		*Dollars.*	*Dollars.*	*Dollars.*	
1201	New York to Dunkirk	Erie	66 393		25½ 19½	128,948 00			332 miles, at $292. 127 miles, at $252.
1202	Suffern to Piermont	do	18		6	900 00		50 00	
1203	Buffalo to Suspension Bridge	do	25.94		13	1,686 10		65 00	
1204	Newburgh to Chester Branch, Vail's Gate to Junction with main stem.	do	19.75 12.75		12 12	1,921 25		65 00 50 00	
1205	Rochester to Avon	do	18		12	1,440 00		80 00	
1206	Avon to Dansville	do	30.73		12	1,843 80		60 00	
1207	Attica to Corning	do	111		19½	30,525 00		275 00	
1208	Buffalo to Hornellsville	do	91		22½	12,103 00		133 00	
1209	Goshen to Montgomery	do	10.25		6	512 50		50 00	
1210	Goshen to Pine Island	do	11		6	440 00		40 00	
1211	New York to Troy	New York Central and Hudson River.	144 6		54 54	141,240 00		975 00 140 00	Pay estimated.
1212	Troy to Schenectady	do	22		18	1,804 00		82 00	
1213	Syracuse to Rochester	do	104		21½	15,600 00		150 00	
1214	Canandaigua to Niagara Falls	do	97		6	7,275 00		75 00	
1215	Buffalo to Lockport	do	22		12	1,650 00		75 00	
1216	Buffalo to Lewiston	do	29		6	2,175 00		75 00	
1217	Albany to Buffalo	do	298		34	303,364 00		1,018 00	Do.
1218	Rochester to Niagara Falls	do	76		24	16,264 00		214 00	
1219	New York to Chatham Village	New York and Harlem	130.5		6	13,050 00		100 00	Old rate of pay.
1221	Eagle Bridge to Rutland, Vt	Delaware and Hudson Canal Company.	51 11.5		12 12	9,677 50		153 00 163 00	
1223	Schenectady to Ballston	do	16		6	832 00		52 00	
1224	Albany to Canada Line Branch, Whitehall to Castleton, Vt. Branch, Albany Junction to Troy	do	189.93 16 6		17½ 6 24	30,919 36		152 00 100 00 75 00	
1225	Oswego to Richland	Rome, Watertown and Ogdensburgh.	28.5		12	1,852 50		65 00	
1226	Watertown to Cape Vincent	do	26		12	1,625 00		62 50	
1227	Rome to Ogdensburgh Branch, De Kalb Junction to Norwood.	do	72.62 69.38 25		18 12 6	21,158 50		138 00 138 00 62 50	

1228	Chenango Forks to Norwich	Delaware, Lackawanna and Western.	30.69		12	1,841 40		60 00	
1229	Utica to Norwich	do	54.5		12	4,360 00		80 00	
1230	Owego to Ithaca	do	35		12	2,800 00		80 00	
1231	Cassville Junction to Richfield Springs.	do	21		12	1,155 00		55 00	
1232	Mineola to Locust Valley	Long Island	12.25		12	612 50		50 00	
1233	New York to Greenport Branch, Mineola to Hempstead	do	32 35 31 2.5		12 9 6 12	11,045 00		90 00	$2,000 per annum included for mail-messenger service at New York.
1234	Hicksville to Port Jefferson	do	20 16.5		12 12	2,355 00		60 00 70 00	
2235	Oswego to Middletown Branch, Summit Junction to Ellenville.	New York and Oswego Midland	250.2 8		6 6	12,910 00		50 00	
1338	Norwich to Cortland Village	do	49.21		6	2,460 50		50 00	
1239	Clinton to Rome	Rome and Clinton	13.75		12	687 50		50 00	
1240	Walton to Delhi	New York and Oswego Midland	16		12	800 00		50 00	
1241	Buffalo to Chicago, Ill	Lake Shore and Michigan Southern	169 15.5 135.2 222.3		26 28 38 12	338,761 60			184.5 miles, at $981. 34.2 miles, at $996. 222.3 miles, at $193. 101 miles, at 800. Pay estimated.
1242	Rouse's Point to Ogdensburgh	Central Vermont	119		9	14,875 00		125 00	
1244	Cobleskill to Cherry Valley	Delaware and Hudson Canal Company.	22.47		12	1,123 50		50 00	
1245	Albany to Binghamton	do	142		18	14,342 00		101 00	
1246	Schoharie to Middleburgh	Middleburgh and Schoharie	5.5		12	395 00		50 00	$120 per annum included for side-service.
1247	Central Bridge to Schoharie	Schoharie Valley	5		18	400 00		80 00	
1248	Utica to Smith Valley Station	Utica, Clinton and Binghamton	31.4		6	1,570 00		50 00	
1249	Buffalo to Emporium	Buffalo, New York and Philadelphia.	123.51		6	7,410 60		60 00	
1250	Fredonia to Dunkirk	Dunkirk and Fredonia	3.5		27	500 00		142 86	
1251	Skaneateles Junction to Skaneateles.	Skaneateles	5.5		12	560 00		50 00	$285 per annum included for mail-messenger service.
1252	Brocton to Corry, Pa	Allegheny Valley	45.3		6	3,000 90		53 00	$600 per annum included for side-service.
1253	Chesterville to Warwick	Warwick Valley	11		12	550 00		50 00	
1255	Canandaigua to Elmira	Northern Central	68.5		12	8,288 50		121 00	
1256	Syracuse to Oswego	Oswego and Syracuse	35.5		18	3,550 00		100 00	
1257	Syracuse to Binghamton	Syracuse, Binghamton and New York.	80		12	7,200 00		90 00	
1258	Rouse's Point to Canada Line	Champlain and Saint Lawrence	2.25		6	262 50		116 66	
1259	Troy to North Adams, Mass Branch, North Hoosick Junction to State Line.	Troy and Boston	23.2 26.8 5.5		24 18 6	6,937 50		125 00	
1260	Stapleton to Tottenville	Staten Island	21		12	1,800 00		50 00	$750 per annum included for side-service.
1261	Hudson to Chatham Village	Hudson and Boston	17.25		12	862 50		50 00	
1262	East Gainesville to Perry	Rochester and Pine Creek	6.55		12	327 50		50 00	
1264	Syracuse to Earlville	Syracuse and Chenango	20 22.47		12 6	2,123 50		50 00	

B.—*Railroad-service as in operation on the 30th of June*, 1876—Continued.

Number of route.	State and termini.	Corporate title of company carrying the mail.	Distance.	Total distance in each State.	Number of trips per week.	Annual pay.	Annual pay in each State.	Annual cost per mile on each route.	Remarks.
	NEW YORK—Continued.		*Miles.*	*Miles.*		*Dollars.*	*Dollars.*	*Dollars.*	
1265	Dunkirk to Titusville, Pa	New York Central and Hudson River.	91.16		6	4,558 00		50 00	
1266	Ithaca to State Line	Ithaca and Athens	34.6		6	1,730 00		50 00	
1267	Syracuse to Lacona	Rome, Watertown and Ogdensburgh.	44.92		12	2,470 60		55 00	
1268	Rondout to Stamford	New York, Kingston and Syracuse.	73.3		12	3,665 00		50 00	
1269	Ithaca to Cortland Village	Utica, Ithaca and Elmira	23		12	1,495 00		65 00	
1270	Port Jervis to Monticello	Monticello and Port Jervis	24		6	1,200 00		50 00	
1271	Poughkeepsie to State Line, Mass.	Poughkeepsie, Hartford and Boston	43.15		6	2,157 50		50 00	
1272	Canastota to Cazenovia	Cazenovia, De Ruyter and Canastota.	15		18	750 00		50 00	
1273	Fonda to Gloversville	Fonda, Johnstown and Gloversville.	10		12	1,390 00		64 00	$750 per annum included for side-service.
1274	Johnsonville to Greenwich	Greenwich and Johnsonville	14		12	600 00		42 86	
1275	Montgomery to Kingston	Wallkill Valley	33.46		6	1,003 80		30 00	
1276	Athens, Pa., to Fair Haven, N. Y.	Southern Central	122		6	8,520 00		60 00	$1,200 per annum included for side-service.
1277	Newburgh to Millerton Branch, Clove Branch Junction to Sylvan Lake.	Dutchess and Columbia	56.5 4.5		6 6	3,050 00		50 00	
1278	Cooperstown to Cooperstown Junction.	Cooperstown and Susquehanna Valley.	16		12	1,000 00		62 50	
1279	Chatham Village to Rutland, Vt. Branch, North Bennington to State Line.	Central Vermont	111.3 2		6 6	14,032 50		125 00 60 00	
1280	Plattsburgh to Au Sable Forks	Delaware and Hudson Canal Company.	23		6	1,150 00		50 00	
1283	Utica to Watertown	Utica and Black River	92.22		12	5,994 30		65 00	
1284	Cayuga to Ithaca	Cayuga	38.05		6	2,359 10		62 00	
1285	Sodus Point to Gorham Station	Sodus Point and Southern	34		6	1,700 00		50 00	
1286	Horseheads to Ithaca	Utica, Ithaca and Elmira	48.5		6	2,025 00		50 00	Pay estimated.
1287	Oswego to Charlotte	Rome, Watertown and Ogdensburgh.	69.64		6	3,482 00		50 00	Do.
1288	Carthage to Morristown Branch, Theresa Junction to Clayton.	Utica and Black River	20.5 29.58 16.25		12 12 12	4,036 06		75 00 57 00 50 00	
1289	Freeville to Scipio	Utica, Ithaca and Elmira	28.82		6	1,441 00		50 00	
1290	Buffalo to Jamestown	Buffalo and Jamestown	71.00		6	4,478 67		63 00	

1291	Golden's Bridge to Mahopac	New York and Harlem	7.5		6	375 00		50 00	Old rate of pay.
1292	Crawford Junction to Pine Bush	Middletown and Crawford	10.18		6	605 00		50 00	$96 per annum included for mail-messenger service.
1293	Ithaca to Geneva	Geneva, Ithaca and Athens	40.25		6	2,535 75		63 00	
1294	Watertown to Sackett's Harbor	Utica and Black River	12.5		6	625 50		50 00	
1295	New York to Babylon	Southern Railroad Company of Long Island.	36.25		12	3,762 50		50 00	$1,950 per annum included for mail-messenger service.
1296	New York to Patchogue	Flushing, North Shore and Central.	59.21		12	7,282 47		57 00	$3,600 per annum included for mail-messenger service.
	Branch, Flushing to Whitestone		3.12		12			30 00	
	Branch, Bay Side to Manhasset		3.03		12			50 00	
1802	Quaker Street to Schenectady	Delaware and Hudson Canal Co.	15		12	675 00		45 00	
1803	Nineveh Junction to Jefferson Junction.	do	21		6	945 00		45 00	
1804	Saratoga Springs to North Creek	Adirondack	57.96		6	2,898 00		50 00	Pay estimated.
1805	Thirtieth Street to Spuyten Duyvil	New York Central and Hudson River.	10		18	500 00		50 00	
1806	Manorville to Sag Harbor	Long Island	35.25		6	1,762 50		50 00	Do.
1810	Bath to Hammondsport	Bath and Hammondsport	9.4		15	470 00		50 00	
1811	Rochester to Charlotte	New York Central and Hudson River.	9		12	468 00		52 00	
1812	Rhinecliff to Boston Corner	Rhinebeck and Connecticut	35.2		6	1,760 00		50 00	Do.
1813	Gloversville to Northville	Gloversville and Northville	17.375		12	968 00		50 00	$100 per annum included for side-service; pay estimated.
1814	Batavia to Attica	New York Central and Hudson River.	11		6	550 00		50 00	Pay estimated.
1815	Fort Edward to Glen's Falls	Delaware and Hudson Canal Co.	6.92		12	346 00		50 00	Do.
1816	Crown Point to Hammondsville	Crown Point Iron Company's Railroad.	11.82		6	591 00		50 00	Do.
				5,863.15			1,306,082 26		
	NEW JERSEY.								
2101	New York to Easton, Pa.	Central Railroad Company of New Jersey.	74		19	22,200 00		300 00	
2102	Somerville to Flemington	do	16.06		6	690 00		42 96	
2103	New York to West Philadelphia, Pa.	Pennsylvania	90		74	86,115 60		952 00	Old rate of pay.
	Branch, Princeton Junction to Princeton.		3.2		12			55 00	
	Branch, Frankford Junction to Kensington Junction.		2.95		24			88 00	
2105	Camden to Monmouth Junction	do	53.56		12	6,253 90		90 00	
	Branch, Bordentown to Trenton		7		12			98 00	
	Branch, Jamesburgh to South Amboy.		14.95		6			50 00	
2106	New York to Easton, Pa.	Morris and Essex	63		12	10,617 00			54 miles, at $131; 19 miles, at $141; 14.4 miles, at $60.
			24.4		6				
2107	Camden to Atlantic City	Camden and Atlantic	60			3,600 00		60 00	18 times a week 4 months, 12 times a week 8 months.
2108	New York to Nyack, N. Y.	Northern Railroad Company of New Jersey.	30		6	2,158 00		50 00	$658 per annum included for side-service.

B.—*Railroad-service as in operation on the 30th of June*, 1876—Continued.

Number of route.	State and termini.	Corporate title of company carrying the mail.	Distance.	Total distance in each State.	Number of trips per week.	Annual pay.	Annual pay in each State.	Annual cost per mile on each route.	Remarks.
	NEW JERSEY—Continued.		*Miles.*	*Miles.*		*Dollars.*	*Dollars.*	*Dollars.*	
2109	Philadelphia, Pa., to Hightstown, N. Y. Branch, Burlington to Mount Holly.	Pennsylvania	25 27.5 7		12 6 6	3,725 00		75 00 40 00 50 00	$400 per annum included for mail-messenger service at Philadelphia.
2110	Philadelphia, Pa., to Bridgeton, N. J.	West Jersey	18 20.4		18 12	4,824 00		110 00	$600 per annum included for mail-messenger service at Philadelphia.
2111	Glassborough to Millville	do	22		12	2,200 00		100 00	
2112	Millville to Cape May	do	41		12	3,075 00		75 00	
2113	Elmer to Salem	do	16.6		12	1,000 00		60 24	
2114	Mount Holly to Medford	Pennsylvania	6.5		12	325 00		50 00	
2115	Jamesburgh to Squan Village	Freehold, Jamesburgh and Agricultural.	27		12	1,892 13		66 37½	$100 per annum included for side-service.
2116	Trenton to intersection with Delaware, Lackawanna and Western Railroad.	Pennsylvania	68.7		20¼	5,496 00		80 00	
2117	Lambertville to Flemington	do	12.13		12	606 50		50 00	
2118	Greensburgh Station to New Brunswick.	do	29.13		12	1,165 20		40 00	
2119	New York to New Bridge	New Jersey and New York	16.5		6	825 00		50 00	
2120	New Bridge to Stony Point, N. Y.	do	27.18		6	1,359 00		50 00	Pay estimated.
2121	Waterloo to Franklin Furnace Branch, La Fayette Junction to Branchville.	Sussex	12 12.76 6.24		12 6 6	1,650 00		50 00	$100 per annum included for side-service on branch.
2122	New York to Denville	Delaware, Lackawanna and Western.	35.93		12	4,024 16		112 00	
2123	Dover to Chester	Morris and Essex	10		6	500 00		50 00	
2124	Newark to Mont Clair	Newark and Bloomfield	5.67		12	283 50		50 00	
2125	Rocky Hill to Monmouth Junction	Pennsylvania	8		6	400 00		50 00	
2126	Sandy Hook to Pemberton Junction. Branch, Eatontown to Port Monmouth. Branch, Manchester to Barnegat Junction.	New Jersey Southern	41.2 23.9 9.8 20.3		12 6 12 12	5,866 70		67 00 67 00 50 00 50 00	

2127	Whiting to Atco	do	33.3		6	1,665 00		50 00	
2128	Newark to Paterson	Erie	13.12		6	656 00		50 00	
2129	Atsion to Bridgeton	Vineland	37.75		6	1,510 00		40 00	
2130	Whiting to Long Beach	Tuckerton	29.56 8.5		6	1,584 25		50 00	Six times a week for three months, on 8.5 miles.
2131	Kinkora to New Lisbon	Pennsylvania	14.41		6	576 40		40 00	
2133	Bridgeton to Port Norris	Bridgeton and Port Norris	20.24		6	1,257 20		30 00	$650 per annum included for mail-messenger service.
2134	Egg Harbor City to May's Landing	Camden and Atlantic	7.43		12	371 50		50 00	
2135	Jersey City to Ringwood	Mont Clair	33.5		6	1,340 00		40 00	
2136	Atco to Williamstown	Williamstown	9		6	270 00		30 00	
2149	Summit to Bernardsville	New Jersey West Line	14.6		6	730 00		50 00	
2209	Woodbury to Swedesborough	West Jersey	11		6	550 00		50 00	
2254	New York to Middletown, N. Y	New Jersey Midland	88		6	7,304 00		83 00	
2258	Elizabethport to Sea Plain	Central Railroad Company of New Jersey.	47.9		12	2,395 00		50 00	Pay estimated.
2259	Rahway to Perth Amboy	Pennsylvania	7.45		12	372 50		50 00	Do.
				1,365 32			191,433 54		
	PENNSYLVANIA.								
2401	Philadelphia to Pittsburgh	Pennsylvania	353.6		40¾	147,451 20		417 00	
2402	Philadelphia to Pottsville	Philadelphia and Reading	92.5		14¾	11,562 50		125 00	
2403	Philadelphia to West Chester	West Chester and Philadelphia	26.13		18	2,062 50		75 00	$102.75 per annum included for side-service.
2404	Philadelphia to Bethlehem Branch, Lansdale to Doylestown	North Pennsylvania	54.6 9.8		45¾ 18	6,496 00		110 00 50 00	
2405	Philadelphia to Norristown	Philadelphia and Reading	16.24		12	893 20		55 00	
2406	Philadelphia to Darby	Philadelphia and Darby	5		6	500 00		100 00	
2407	Bridgeport to Downingtown	Philadelphia and Reading	21.48		6	644 40		30 00	
2408	Chester to Port Deposit, Md	Philadelphia and Baltimore Central.	59.25		12	4,858 50		82 00	
2409	Honesdale to Lackawaxen	Erie	25		12	1,500 00		60 00	
2410	Allentown to Waverly, N. Y	Lehigh Valley	105 55 29.5		10 10 10	20,890 00		105 00 115 00 120 00	
2411	Penn Haven Junction to Mount Carmel.	do	50		9½	2,500 00		50 00	
2412	Penn Haven Junction to Audenried	do	17.5		12	1,312 50		75 00	
2413	Pottsville to Herndon	Philadelphia and Reading	81.1		10⅜	4,460 50		55 00	
2414	Port Clinton to Williamsport	do	121.53		7	7,291 80		60 00	
2415	Sunbury to Tomhicken	Pennsylvania	44.1		6	2,381 40		54 00	
2416	Hazel Creek Bridge to Tomhicken	Lehigh Valley	13.8 11.4		13 13	2,028 00		85 00 75 00	
2417	Scranton to Northumberland	Lackawanna and Bloomsburgh	80		7½	7,200 00		90 00	
2418	Scranton to Carbondale	Delaware and Hudson Canal Company.	17.11		12	1,200 00		50 00	$344.50 per annum included for mail-messenger service.
2419	Binghamton, N. Y., to New Hampton, N. J.	Delaware, Lackawanna and Western.	144.5		9¾	12,282 50		85 00	

B.—*Railroad-service as in operation on the 30th of June*, 1876—Continued.

Number of route.	State and termini.	Corporate title of company carrying the mail.	Distance.	Total distance in each State.	Number of trips per week.	Annual pay.	Annual pay in each State.	Annual cost per mile on each route.	Remarks.
	PENNSYLVANIA—Continued.		*Miles.*	*Miles.*		*Dollars.*	*Dollars.*	*Dollars.*	
2420	Blossburgh to Corning, N. Y.	Tioga	39.88		12	3,713 00		75 00	
	Branch to Fall Brook		6.85		12			50 00	
	Branch to Morris Run		3.8		6			50 00	
	Branch to Arnot		3.79		6			50 00	
2421	Williamsport to Elmira, N. Y	Northern Central	78		12	13,650 00		175 00	
2422	Sunbury to Erie	Pennsylvania	39.8		18	36,010 20		195 00	
			247.8		18			114 00	
2423	Sunbury to Mount Carmel	Northern Central	28		10	1,400 00		50 00	
2424	Alton to Carrollton, N. Y	Erie	25.5		6	1,020 00		40 00	
2425	Irvine to Corry	Pittsburgh, Titusville and Buffalo	95		12	6,365 00		67 00	
2426	Strasburgh to Leaman Place	Herr & Company	4.25		6	250 00		58 83	
2427	Lancaster to Middletown	Pennsylvania	31.2		15	2,184 00		70 00	
2428	Harrisburgh to Auburn	Philadelphia and Reading	58.3		7½	2,915 00		50 00	
2429	Newcastle to Homewood	Pittsburgh, Fort Wayne and Chicago.	15		6	2,250 00		150 00	
2430	Harrisburgh to Martinsburgh, W. Va.	Cumberland Valley	94		11½	7,238 00		77 00	
2431	Columbia to Sinking Spring	Reading and Columbia	39.7		8¾	3,145 00		50 00	Pay estimated on 15.4 miles.
	Branch, Junction to Quarryville		23.2		12				
2432	York to Columbia	Pennsylvania	13.5		6	675 00		50 00	
2433	York to Frederick, Md	Hanover Branch	56		7½	3,450 00		50 00	Pay estimated on 18.6 miles.
	Branch, Hanover Junction to Hanover.		13		6				
2434	Hanover to Gettysburgh	do	17.5		12	1,050 00		60 00	
2435	Huntingdon to Mount Dallas Station.	Huntingdon and Broad Top	44		6	3,000 00		60 00	
	Branch, Saxton to Dudley		6		6				
2436	Tyrone to Curwinsville	Pennsylvania	47.1		12	3,061 50		65 00	Pay estimated on 6.5 miles.
2437	Altoona to Martinsburgh	do	22.3		10½	1,600 00		50 00	
	Branch, Duncansville to Newry		3		6				
	Branch, Martinsburgh Junction to Henrietta.		6.7		6				
2438	Cresson to Ebensburgh	do	11		12	550 00		50 00	
2439	Tyrone to Lock Haven	do	55.1		12	3,605 75		62 50	
	Branch, Milesburgh to Bellefont		2.7		12			60 00	
2440	Blairsville to Allegheny	do	63.7		9½	4,140 50		65 00	

2441	Washington to Wheeling, W. Va	Hemphield	39		12	2,137 00		55 00	$377 per annum included for side-service.
2442	Pittsburgh to Oil City	Allegheny Valley	132.71		18	13,271 00		100 00	
2443	Branch Junction to Indiana	Pennsylvania	19		12	1,140 00		60 00	
2444	Meadville to Oil City	Atlantic and Great Western	36.25		9	2,265 62		62 50	
2445	Miles' Grove to Newcastle	Erie and Pittsburgh	83		12	10,790 00		130 00	
2446	Oil City to Ashtabula, Ohio	Lake Shore and Michigan Southern	87.09		6	4,354 50		50 00	
2447	Bethlehem to Chapman Quarries	Lehigh and Lackawanna	15		12	750 00		50 00	
2448	Downingtown to Honey Brook	Pennsylvania	18		6	900 00		50 00	
2449	West Chester to Intersection Pennsylvania Railroad.	West Chester	9		6	250 00		27 77	
2450	Junction Pennsylvania Railroad to Milroy.	Pennsylvania	12.5		12	625 00		50 00	
2451	Pottsville to Frackville	Philadelphia and Reading	8.51		10⅔	425 50		50 00	
2452	Greenville to Hilliard's	Shenango and Allegheny	47.5		6	2,850 00		60 00	Pay estimated on 14 miles
2453	Carlisle to Mountain Creek	South Mountain Iron Company	18		6	450 00		25 00	
2454	Freeport to Butler	Pennsylvania	21.3		12	1,065 00		50 00	
2455	Wilmington, Del., to Reading, Pa.	Wilmington and Reading	72.6		6	3,630 00		50 00	
2456	Pittsburgh to Washington	Pittsburgh, Cincinnati and Saint Louis.	22.8		12	1,482 00		65 00	
2457	Perkiomen Junction to Pennsburgh.	Philadelphia and Reading	37.72		6½	1,697 40		45 00	Pay estimated on 14 miles.
2458	Pottstown to Colebrookdale	do	13.05		6	522 00		40 00	
2459	Oleopolis to Pithole	Pithole Valley	7		6	210 00		30 00	
2460	Lebanon to Tower City	Philadelphia and Reading	43.1		7½	1,724 00		40 00	
2461	Towanda to Bernice	Sullivan and Erie Coal and Railroad Company.	29.32		6	1,172 80		40 00	
2462	Schuylkill Haven to Glenn Carbon.	Philadelphia and Reading	13.2		12	528 00		40 00	
2463	Topton to Kutztown	do	4.36		9	218 00		50 00	
2464	Pittsburgh to Cumberland, Md. Branch, Broad Top to Mount Pleasant. Branch, Connellsville to Uniontown.	Pittsburgh and Connellsville	147.8 9 12		12 12 12	13,661 00		85 00 50 00 54 00	
2465	Carbondale to Susquehanna Depot	Erie	38.25		6	1,912 50		50 00	
2466	Lawrenceville to Antrim	Fall Brook Coal Company	23.5 13.6		12 12	2,442 50		75 00 50 00	
2467	Phœnixville to Eagle	Philadelphia and Reading	11.12		6	556 00		50 00	
2468	Lewisburgh to Laurelton	Pennsylvania	20.73		12	1,350 80		60 00	$107 per annum included for mail-messenger service.
2470	Union City to Titusville	Pittsburgh, Titusville and Buffalo.	14.1		6	705 00		50 00	
2471	Towanda to Barclay	Towanda Coal Company	12		6	480 00		40 00	
2472	Shaff's Bridge to Somerset	Somerset and Mineral Point	9.1		12	655 00		50 00	$200 per annum included for mail-messenger service.
2474	Marion Junction to Richmond Furnace. Branch, Mercersburgh Junction to Mercersburgh.	Cumberland Valley	19.13 2.31		6 6	1,072 00		50 00	
2475	Mount Dallas Station to New Bridgeport.	Pennsylvania	32		7	1,600 00		50 00	
2476	Allentown to Harrisburgh	Philadelphia and Reading	90		21	20,880 00		232 00	

B.—*Railroad-service as in operation on the 30th of June*, 1876—Continued.

Number of route.	State and termini.	Corporate title of company carrying the mail.	Distance.	Total distance in each State.	Number of trips per week.	Annual pay.	Annual pay in each State.	Annual cost per mile on each route.	Remarks.
	PENNSYLVANIA—Continued.		*Miles.*	*Miles*		*Dollars.*	*Dollars.*	*Dollars.*	
2477	Conshohocken to Flourtown	Philadelphia and Reading	7.25		6	362 50		30 00	$145 per annum included for mail messenger service.
2479	Easton to Allentown	Lehigh Valley	16.58		36	4,078 68		246 00	
2480	Red Bank Furnace to Driftwood	Allegheny Valley	109.95		6	5,497 50		50 00	
2482	Chambersburgh to Mont Alto	Mont Alto	14.75		6	590 00		40 00	
2483	Tunkhannock to Montrose	Montrose	25.24		6	1,009 60		40 00	
2484	Lawrenceville to Elkland	Fall Brook Coal Company	13.08		12	654 00		50 00	
2485	Mechanicsburgh to Dillsburgh	Cumberland Valley	8.85		6	354 00		40 00	
2486	Pittsburgh to Monongahela City	Pittsburgh, Virginia and Charleston.	31.84		9	2,133 28		67 00	
2487	Valley Junction to Ebbvale, Md	Bachman Valley	13.3		6	399 00		30 00	
2488	Pomeroy to Delaware City, Del	Pennsylvania	38.58		6	1,543 20		40 00	
2489	Hollidaysburgh to Royer	do	21.25		6	956 25		45 00	
2490	Mount Union to Broad Top	East Broad Top Railroad and Coal Company.	32.23		6	1,289 20		40 00	
2491	Pollock to Karns City	Parker and Karns City	10		12	600 00		60 00	
2492	Antestown to Lloydsville	Bell's Gap	8.82		6	441 00		50 00	
2493	Philipsburgh to Morrisdale Mines	Pennsylvania	3.69		6	184 59		50 00	
2494	Reading to Slatington	Philadelphia and Reading	43.32		6	1,949 40		45 00	
2495	Berlin to Garrett	Buffalo Valley	8.62		12	431 00		50 00	
2495a	Larabee to Clermont	McKean and Buffalo	23.3		6	1,048 50		45 00	
2496	York to Delta	Peach Bottom	35.56		6	1,778 00		50 00	
2496a	Barnitz to Williams' Mill	Harrisburgh and Potomac	13.9		6	695 00		50 00	Pay estimated.
2497	Lawsonham to Sligo	Allegheny Valley	10.47		6	418 80		40 00	
2497a	Norristown to Lansdale	Stony Creek	10.9		6	545 00		50 00	Do.
2498	Oxford to Peter's Creek	Peach Bottom	20.506		6	820 24		40 00	Pay estimated on 3.756 miles.
2499	Pittsburgh to Castle Shannon	Pittsburgh and Castle Shannon	7		6	350 00		50 00	Pay estimated.
2500	Newcastle to Stoneborough	Newcastle and Franklin	36.5		6	1,825 00		50 00	
				4,432.946			466,514.22		
	DELAWARE.								
3401	Wilmington to Delmar	Philadelphia, Wilmington and Baltimore.	84 13.02		12 12	14,815 50		157 00 125 00	
3402	Delmar to Crisfield	Eastern Shore Railroad Company of Maryland.	38		6	2,470 00		65 00	

3403	Clayton to Oxford, Md	Maryland and Delaware	53.75		6	2,931 88		52 50	Pay estimated on 9.75 miles.
3404	Harrington to Lewes	Junction and Breakwater	40		6	3,000 00		50 00	
3405	Wilmington to Landenburgh, Pa.	Wilmington and Western	19.53		6	781 20		40 00	
3406	Georgetown to Selbyville	Breakwater and Frankford	19.3		6	965 00		50 00	Pay estimated.
				267.6			23,853 58		
	MARYLAND.								
3501	Baltimore to Philadelphia, Pa. Branch, Perryville to Port Deposit.	Philadelphia, Wilmington and Baltimore.	96 4		28½ 6	51,848 00		538 00 50 00	
3502	Baltimore to Sunbury, Pa	Northern Central	140.7		18	28,702 80		204 00	
3504	Baltimore to Wheeling, W. Va	Baltimore and Ohio	40 353		46 18	122,586 00			294 miles, at $322. 99 miles, at $282.
3505	Araby to Frederick	do	3		12	300 00		100 00	
3506	Weverton to Hagerstown	do	24.25		12	1,285 25		53 00	
3507	Baltimore to Williamsport	Western Maryland	85.5 6.12		12 12	6,657 30		75 00 40 00	
3508	Annapolis to Annapolis Junction	Annapolis and Elk Ridge	20.5		12	1,537 50		75 00	
3509	Cambridge to Seaford, Del	Dorchester and Delaware	33.5		6	1,675 00		50 00	
3510	Salisbury to Berlin	Wicomico and Pocomoke	23		6	1,150 00		50 00	
3511	Townsend, Del., to Centreville, Md	Queen Anne and Kent	36		6	1,800 00		50 00	
3512	Cumberland to Piedmont, W. Va	Cumberland and Pennsylvania	34		6	1,700 00		50 00	
3513	Clayton, Del., to Chestertown, Md	Kent County	30.8		6	2,310 00		75 00	Pay estimated on 11.25 miles.
3514	Baltimore to Washington, D. C	Baltimore and Potomac	42.6		6	18,360 60		431 00	
3515	Bowie to Pope's Creek	do	48.68		6	2,434 00		50 00	
3516	Newtown Junction to Newtown	Worcester and Somerset	9		6	450 00		50 00	
3517	Selbyville, Del., to Greenbackville, Va.	Worcester	35.24		6	1,762 00		50 00	Pay estimated on 21.24 miles.
3518	Saint Denis to Point of Rocks	Baltimore and Ohio	60		6	6,000 00		100 00	
3519	Lake Roland to Western Maryland Railroad Junction.	Northern Central	8.5		6	425 00		50 00	Pay estimated.
3520	Emmittsburgh to Rocky Ridge	Emmittsburgh	7		6	350 00		50 00	
				1,141.39			251,333 45		
	WEST VIRGINIA.								
12001	Harper's Ferry to Harrisonburgh, Va.	Baltimore and Ohio	100.47		6	8,339 01		83 00	
12002	Grafton to Parkersburgh	do	104.58		14	31,896 90		305 00	
12004	Laurel Junction to Volcano	Laurel Fork and Sand Hill	10		18	400 00		40 00	
12005	Pennsborough to Ritchie C. H	Pennsborough and Harrisville	9		6	450 00		50 00	
				224.05			41,085 91		
	VIRGINIA.								
11001	Washington, D. C., to Richmond, Va.	Richmond, Fredericksburgh and Potomac.	131		13	34,715 00		265 00	

B.—*Railroad-service as in operation on the 30th of June*, 1876—Continued.

Number of route.	State and termini.	Corporate title of company carrying the mail.	Distance.	Total distance in each State.	Number of trips per week.	Annual pay.	Annual pay in each State.	Annual cost per mile on each route.	Remarks.
	VIRGINIA—Continued.		*Miles.*	*Miles.*		*Dollars.*	*Dollars.*	*Dollars.*	
11002	Alexandria to Lynchburg Branch, Warrenton Junction to Warrenton.	Washington City, Virginia Midland and Great Southern.	170.82 9		13 6	43,155 00		250 00 50 00	
11003	Manassas to Strasburgh	do	62.55		6	3,190 05		51 00	
11004	Alexandria to Round Hill	Washington and Ohio	52.74		6	2,795 22		53 00	
11005	Richmond to Huntington, W. Va	Chesapeake and Ohio	272.96 148.6		12 12	34,225 40		90 00 65 00	
11006	Richmond to Greensborough, N. C	Richmond and Danville	189.58		16	32,228 60		170 00	
11007	Richmond to West Point	Richmond, York River and Chesapeake.	39.84		6	1,992 00		50 00	
11008	Richmond to Petersburgh	Richmond and Petersburgh	24.07		14	5,734 24		232 00	$150 per annum included for mail-messenger service.
11009	Petersburgh to Weldon, N. C	Petersburgh	65.51		14	14,543 22		222 00	
11010	Petersburgh to City Point	Atlantic, Mississippi and Ohio	10.75		6	537 50		50 00	
11011	Petersburgh to Norfolk	do	82.4		6	4,944 00		60 00	
11012	Petersburgh to Lynchburgh	do	123.75		6	8,043 75		65 00	
11013	Lynchburgh to Bristol, Tenn	do	205		14	49,200 00		240 00	
11014	Glade Spring to Saltville	do	10		6	285 00		28 50	
11015	Portsmouth to Weldon, N. C	Seaboard and Roanoke	79.26		6	4,676 34		59 00	
11016	Lynchburgh to Danville	Washington City, Virginia Midland and Great Southern.	66.34		6	3,317 00		50 00	
11017	Chester to Winterpock	Richmond and Petersburgh	18.5		6	370 00		20 00	
11018	Washington, D.C., to Alexandria, Va	Alexandria and Washington	7		13	1,750 00		250 00	
				1,769 67			245,702 32		
	NORTH CAROLINA.								
13001	Raleigh to Weldon	Raleigh and Gaston	97		6	7,275 00		75 00	
13002	Weldon to Wilmington Branch, Rocky Mount to Tarborough.	Wilmington and Weldon	163 17		13 7	28,886 00		172 00 50 00	
13003	Wilmington to Charlotte	Carolina Central	189.66		6	10,431 30		55 00	
13004	Goldsborough to Charlotte	Richmond and Danville	130.35 93		14 12	25,028 25		75 00 164 00	
13005	Goldsborough to Morehead City	Atlantic and North Carolina	95		6	5,225 00		55 00	
13006	Salisbury to Henry's	Western North Carolina	117.31		6	6,686 67		57 00	Pay estimated on 3 miles.

1228	Chenango Forks to Norwich	Delaware, Lackawanna and Western.	30.69		12	1,841 40		60 00	
1229	Utica to Norwich	do	54.5		12	4,360 00		80 00	
1230	Owego to Ithaca	do	35		12	2,800 00		80 00	
1231	Cassville Junction to Richfield Springs.	do	21		12	1,155 00		55 00	
1232	Mineola to Locust Valley	Long Island	12.25		12	612 50		50 00	
1233	New York to Greenport Branch, Mineola to Hempstead	do	32 35 31 2.5		12 9 6 12	11,045 00		90 00	$2,000 per annum included for mail-messenger service at New York.
1234	Hicksville to Port Jefferson	do	20 16.5		12 12	2,355 00		60 00 70 00	
2235	Oswego to Middletown Branch, Summit Junction to Ellenville.	New York and Oswego Midland	250.2 8		6 6	12,910 00		50 00	
1338	Norwich to Cortland Village	do	49.21		6	2,460 50		50 00	
1239	Clinton to Rome	Rome and Clinton	13.75		12	687 50		50 00	
1240	Walton to Delhi	New York and Oswego Midland	16		12	800 00		50 00	
1241	Buffalo to Chicago, Ill	Lake Shore and Michigan Southern	169 15.5 135.2 222.3		26 28 38 12	338,761 60			184.5 miles, at $981. 34.2 miles, at $996. 222.3 miles, at $193. 101 miles, at 800. Pay estimated.
1242	Rouse's Point to Ogdensburgh	Central Vermont	119		9	14,875 00		125 00	
1244	Cobleskill to Cherry Valley	Delaware and Hudson Canal Company.	22.47		12	1,123 50		50 00	
1245	Albany to Binghamton	do	142		18	14,342 00		101 00	
1246	Schoharie to Middleburgh	Middleburgh and Schoharie	5.5		12	395 00		50 00	$120 per annum included for side-service.
1247	Central Bridge to Schoharie	Schoharie Valley	5		18	400 00		80 00	
1248	Utica to Smith Valley Station	Utica, Clinton and Binghamton	31.4		6	1,570 00		50 00	
1249	Buffalo to Emporium	Buffalo, New York and Philadelphia.	123.51		6	7,410 60		60 00	
1250	Fredonia to Dunkirk	Dunkirk and Fredonia	3.5		27	500 00		142 86	
1251	Skaneateles Junction to Skaneateles.	Skaneateles	5.5		12	560 00		50 00	$285 per annum included for mail-messenger service.
1252	Brocton to Corry, Pa	Allegheny Valley	45.3		6	3,000 90		53 00	$600 per annum included for side-service.
1253	Chesterville to Warwick	Warwick Valley	11		12	550 00		50 00	
1255	Canandaigua to Elmira	Northern Central	68.5		12	8,288 50		121 00	
1256	Syracuse to Oswego	Oswego and Syracuse	35.5		18	3,550 00		100 00	
1257	Syracuse to Binghamton	Syracuse, Binghamton and New York.	80		12	7,200 00		90 00	
1258	Rouse's Point to Canada Line	Champlain and Saint Lawrence	2.25		6	262 50		116 66	
1259	Troy to North Adams, Mass Branch, North Hoosick Junction to State Line.	Troy and Boston	23.2 26.8 5.5		24 18 6	6,937 50		125 00	
1260	Stapleton to Tottenville	Staten Island	21		12	1,800 00		50 00	$750 per annum included for side-service.
1261	Hudson to Chatham Village	Hudson and Boston	17.25		12	862 50		50 00	
1262	East Gainesville to Perry	Rochester and Pine Creek	6.55		12	327 50		50 00	
1264	Syracuse to Earlville	Syracuse and Chenango	20 22.47		12 6	2,123 50		50 00	

B.—*Railroad-service as in operation on the 30th of June*, 1876—Continued.

Number of route.	State and termini.	Corporate title of company carrying the mail.	Distance.	Total distance in each State.	Number of trips per week.	Annual pay.	Annual pay in each State.	Annual cost per mile on each route.	Remarks.
	GEORGIA—Continued.		*Miles.*	*Miles.*		*Dollars.*	*Dollars.*	*Dollars.*	
15012	Macon to Atlanta	Central Railroad and Banking Company.	103.52		13	11,387 20		110 00	
15013	Macon to Brunswick Branch, Cochran to Hawkinsville.	Macon and Brunswick	188 10		7 6	12,620 00		65 00 40 00	
15014	Gordon to Milledgeville	Central Railroad and Banking Company.	18.25		6	912 50		50 00	
15015	Eatonton to Milledgeville	do	22.125		6	1,106 25		50 00	
15016	Fort Valley to Eufaula, Ala Branch, Smithville to Albany Branch, Cuthbert to Fort Gaines Branch, Albany to Arlington	Southwestern	115.34 23.78 22.67 35.5		10 10 6 6	11,944 60		70 00 50 00 40 00 50 00	Pay estimated on 35.5 miles.
15017	Fort Valley to Perry	do	13.32		6	666 00		50 00	
15018	Thomasville to Albany	Atlantic and Gulf	60.79		7	3,768 98		62 00	
15019	Barnesville to Thomaston	Central Railroad and Banking Company.	17.25		6	690 00		40 00	
15020	Cartersville to Rock Mart	Cherokee	22		6	660 00		30 00	
15021	Camak to Macon	Macon and Augusta	80.66		6	4,355 64		54 00	
15022	Griffin to Carrollton	Savannah, Griffin and North Alabama.	59.86		6	2,693 70		45 00	
15023	Brunswick to Albany	Brunswick and Albany	173.31		3	5,199 30		30 00	
15024	Columbus to Hamilton	North and South	23.51		6	1,057 95		45 00	
				2,365.695			210,630 58		
	FLORIDA.								
16001	Fernandina to Cedar Keys	Atlantic, Gulf, and West India Transit Company.	154.8		6	7,740 00		50 00	
16002	Jacksonville to Chattahoochee River. Branch, Tallahassee to Saint Mark's.	Jacksonville, Pensacola and Mobile.	213.52 21.89		11½ 3	17,519 40		80 00 20 00	
16003	Pensacola to Whiting Junction, Ala.	Pensacola and Louisville	44.05		7	2,200 00		50 00	

	ALABAMA.								
17001	Montgomery to West Point, Ga	Western Railroad Company of Alabama.	88.5		14	13,540 50		153 00	
17002	Montgomery to Selma	do	50		7	2,700 00		54 00	
17003	Montgomery to Eufaula	Montgomery and Eufaula	81.24		6	4,062 00		50 00	
17004	Montgomery to Decatur	South and North Alabama	63.8 119.05		12 6	16,425 25		117 50 75 00	
17005	Memphis, Tenn., to Stevenson, Ala. Branch, Moscow, Tenn., to Somerville. Branch, Tuscumbia to Florence	Memphis and Charleston	271.5 14.5 6.5		14 6 7	44,200 00		160 00 30 00 50 00	
17006	Marion Junction to Greensborough.	Selma, Marion and Memphis	37.25		6	1,862 50		50 00	
17007	Opelika to Columbus, Ga	Western Railroad Company of Alabama.	28		7	1,764 00		63 00	
17008	Columbus, Ga., to Troy, Ala	Mobile and Girard	90		6	4,500 00		50 00	
17009	Selma to York Station	Alabama Central	81.7		7	4,575 20		56 00	
17010	Selma to Dalton, Ga	Selma, Rome and Dalton	237.5		7	17,812 50		75 00	
17011	Gainesville to Gainesville Junction, Miss.	Mobile and Ohio	22		7	990 00		45 00	
17012	Mobile to Montgomery	Mobile and Montgomery	179		7	26,850 00		150 00	
17013	Mobile to New Orleans, La	New Orleans, Mobile and Texas	140		14	18,200 00		130 00	
17014	Opelika to Buffalo	East Alabama and Cincinnati	22.5		6	900 00		40 00	
17015	Chattanooga, Tenn., to Meridian, Miss.	Alabama and Chattanooga	295		7	15,635 00		53 00	
17016	Opelika to Good Water	Savannah and Memphis	47.28 12.37		6 6	2,858 80		50 00 40 00	
17017	Selma to Pine Apple	Selma and Gulf	43.19		4	1,727 60		40 00	
17018	Mobile to Bigbee Bridge	Mobile and Alabama Grand Trunk	59.7		6	2,001 00		30 00	$210 per annum included for mail-messenger service.
17019	Chehaw to Tuskegee	Tuskegee	6		12	300 00		50 00	
17020	Atalla to Gadsden	East Alabama and Cincinnati	6		6	300 00		50 00	
17021	Eufaula to Clayton	Vicksburgh and Brunswick	22.5		6	1,125 00		50 00	
17022	Selma to Martin's Station	Selma and New Orleans	20.5		6	1,025 00		50 00	Pay estimated.
				2,045.58			183,354 35		
	MISSISSIPPI.								
18001	Canton to Cairo, Ill	New Orleans, Saint Louis and Chicago.	342.98		13	61,736 40		180 00	
18002	Memphis, Tenn., to Grenada, Miss.	Mississippi and Tennessee	101.7		10	6,610 50		65 00	
18003	Vicksburgh to Meridian	Vicksburgh and Meridian	45.5 95.2		6 6	10,166 80		100 00 59 00	

B.—*Railroad-service as in operation on the 30th of June, 1876*—Continued.

Number of route.	State and termini.	Corporate title of company carrying the mail.	Distance.	Total distance in each State.	Number of trips per week.	Annual pay.	Annual pay in each State.	Annual cost per mile on each route.	Remarks.
	MISSISSIPPI—Continued.		*Miles.*	*Miles.*		*Dollars.*	*Dollars.*	*Dollars.*	
18004	Mobile, Ala., to Columbus, Ky.. Branch, Artesia to Columbus, Miss.	Mobile and Ohio	472.7 14		7 14	39,461 40		82 00 50 00	
18006	Grand Gulf to Port Gibson	Grand Gulf and Port Gibson	8		6	600 00		75 00	
18007	Muldon to Aberdeen	Mobile and Ohio	9		14	360 00		40 00	
18008	Middleton Station, Tenn., to Ripley, Miss.	Southern Railway Security Company.	24.3		6	972 00		40 00	
18009	Durant to Kosciusko	New Orleans, Saint Louis and Chicago; operating Mississippi Central Railroad.	21.57		6	862 80		40 00	
				1,134.95			120,769 90		
	LOUISIANA.								
30001	New Orleans to Canton, Miss	New Orleans, Saint Louis and Chicago.	206		13	37,286 00		181 00	
30002	New Orleans to Donaldsonville	New Orleans and Texas	63.66		6	3,183 00		50 00	
30003	New Orleans to Brashear	Morgan's Louisiana and Texas Railroad.	83		7	9,530 00		110 00	$400 per annum included for side-supply.
30004	Terre Bonne to Houma	do	15.28		7	764 00		50 00	
30005	Baton Rouge to Livonia	Baton Rouge, Grosse Tête and Opelousas.	28		3	560 00		20 00	
30006	Clinton to Port Hudson	Clinton and Port Hudson	21		3	630 00		30 00	
30007	Saint Francisville to Woodville, Miss.	West Feliciana	27.57		3	964 95		35 00	
30008	Vicksburgh, Miss., to Monroe, La..	Vicksburgh, Shreveport and Texas	75.5		7	4,350 50		51 00	$500 per annum included for mail-messenger service and ferriage.
				520.01			57,268 45		
	TEXAS.								
31001	Houston to Galveston	Galveston, Houston and Henderson.	50		19	7,250 00		145 00	
31002	Harrisburgh to Kingsbury	Galveston, Harrisburgh and San Antonio.	168.6		12	14,162 40		84 00	Pay estimated on 13.4 miles.
31003	Houston to Denison City	Houston and Texas Central do	337.55		6	42,193 75		125 00	

31005	Beaumont to Waco	do	44.56		6	3,342 00		75 00	
31006	Longview to Houston	International and Great Northern	236		6	34,491 25		135 00	
	Branch, Mineola to Zavala		44.125		6			50 00	
	Branch, Phelps to Huntsville		8.5		6			50 00	
31007	Palestine to Rockdale	do	121		6	6,050 00		50 00	
31008	Houston to Columbia	do	50		2	1,250 00		25 00	
31009	Shreveport, La., to Dallas, Tex	Texas and Pacific	40		12	17,028 00		90 00	
			149.2		6				
31010	Marshall to Texarkana, Ark	do	74		6	11,100 00		150 00	
31011	Sherman to Brookston	do	57		6	2,907 00		51 00	
				1,499.235			150,457 40		
	ARKANSAS.								
29001	Memphis, Tenn., to Argenta, Ark	Memphis and Little Rock	134		7	14,070 00		105 00	
29002	Helena to Clarendon	Arkansas Central	48.2		6	2,109 00		45 00	
29003	Chicot to Pine Bluff	Texas, Mississippi River and Northwestern.	72.78		3	2,183 40		30 00	
29004	Chicot to Monticello	do	44.28		3	1,328 40		30 00	
29005	Argenta to Ozark	Little Rock and Fort Smith	125.64		6	10,679 40		85 00	Pay estimated on 5.64 miles.
29006	Malvern to Hot Springs	Hot Springs	25.11		6	1,255 50		50 00	Pay estimated.
				450.01			31,685 70		
	MISSOURI.								
28001	Saint Louis to Atchison, Kans	Atlantic and Pacific	329.75		13⅔	75,183 00		228 00	
28002	Saint Louis to Columbus, Ky	Saint Louis, Iron Mountain and Southern.	197		13	28,568 00		144 00	
	Branch, Mineral Point to Potosi		4		6			50 00	
28003	Pacific to Vinita, Indian Ter	Atlantic and Pacific	327.25		6	37,633 75		115 00	
28004	Saint Louis to Kansas City	Saint Louis, Kansas City and Northern.	276.56		14⅔	42,866 80		155 00	
28005	Quincy, Ill., to Saint Joseph, Mo	Hannibal and Saint Joseph	171		12	48,777 50		240 00	
			32.5		7			215 00	
	Branch, Palmyra to Hannibal		15		13			50 00	
28006	Kansas City to Union Pacific Transfer, Iowa.	Kansas City, Saint Joseph and Council Bluffs.	203.5		12	35,409 00		174 00	
28007	Moberly to Ottumwa, Iowa	Saint Louis, Kansas City and Northern.	131		6	10,480 00		80 00	
28008	Tipton to Boonville	Atlantic and Pacific	25		6	1,275 00		51 00	
28009	Centralia to Columbia	Saint Louis, Kansas City and Northern.	22		6	1,110 00		50 00	
28010	Kansas City to Cameron	Hannibal and Saint Joseph	54		6	13,636 00		239 00	$730 per annum included for ferriage.
28011	Sedalia to Denison City, Tex	Missouri, Kansas and Texas	447		7	84,930 00		190 00	
28012	Saint Joseph to Lexington	Saint Louis, Kansas City and Northern.	76.75		7	3,914 25		51 00	
28013	Brunswick to Pattonsburgh	Brunswick and Chillicothe and Saint Louis, Council Bluffs and Omaha.	80.05		6	4,002 50		50 00	
28014	Hannibal to Sedalia	Missouri, Kansas and Texas	142.88		7	25,718 40		180 00	

B.—*Railroad-service as in operation on the 30th of June*, 1876—Continued.

Number of route	State and termini.	Corporate title of company carrying the mail.	Distance.	Total distance in each State.	Number of trips per week.	Annual pay.	Annual pay in each State.	Annual cost per mile on each route.	Remarks.
	MISSOURI—Continued.		*Miles.*	*Miles.*		*Dollars.*	*Dollars.*	*Dollars.*	
28015	Alexandria to Centreville	Missouri, Iowa and Nebraska	85.63		6	4,281 50		50 00	
28016	Pleasant Hill to Carbondale	Saint Louis, Lawrence and Western.	94		6	5,452 00		58 00	
28017	Sedalia to Lexington	Atlantic and Pacific	56.25		6	2,812 50		50 00	
28018	Keokuk, Iowa, to Louisiana, Mo	Saint Louis, Keokuk and Northwestern.	86.8		6	6,510 00		75 00	Pay estimated on 26.08 miles.
28019	Quincy, Ill., to Kirksville, Mo	Quincy, Missouri and Pacific	71.28		12	4,134 24		58 00	
28020	Pierce City to Brownsville, Kans	Joseph Seligman and Josiah Macy, jr., purchasers of Memphis, Carthage and Northwestern Railroad.	48.31		6	2,415 50		50 00	
28021	Mexico to Cedar City	Chicago and Alton	50.62		6	2,531 00		50 00	
28022	Road House, Ill., to Mexico, Mo	do	90		12	12,780 00		142 00	
28023	Cuba to Salem	Saint Louis, Salem and Little Rock.	40.88		6	2,044 00		50 00	
28024	Holden to Paola, Kans	Missouri, Kansas and Texas	55		6	2,750 00		50 00	
28025	Salisbury to Glasgow	Saint Louis, Kansas City and Northern.	15.66		12	783 00		50 00	
28026	Bismarck to Texarkana, Ark	Saint Louis, Iron Mountain and Southern.	414.25		7	64,208 75		155 00	
28027	Cairo, Ill., to Poplar Bluff, Mo	do	73.73		6	3,686 50		50 00	
28028	Saint Joseph to Hopkins	Kansas City, Saint Joseph and Council Bluffs.	61.5		6	4,305 00		70 00	
28029	Hannibal to Bowling Green	Saint Louis, Hannibal and Keokuk	32.52		6	1,626 00		50 00	Pay estimated.
28030	Saint Joseph to Atchison, Kans	Hannibal and Saint Joseph	22.08		6	1,104 00		50 00	Do.
28031	Saint Louis to Normandy	West End Narrow Gauge	10.53		6	526 50		50 00	Do.
28032	Atchison, Kans., to Edgerton Junction, Mo.	Chicago, Rock Island and Pacific	30		6	1,500 00		50 00	Do.
				3,874.28			536,944 69		
	TENNESSEE.								
19002	Bristol to Chattanooga Branch, Cleveland to Dalton, Ga.	East Tennessee, Virginia and Georgia.	242.7 28.5		14 7	62,068 80		244 00 100 00	
19003	Rogersville to Bull's Gap	W. P. Elliott, owner of Rogersville	15		6	790 00		52 66	

19004	Nashville to Chattanooga Branch, Wartrace Depot to Shelbyville.	Nashville and Chattanooga	114 89		13 20	24,340 00		145 00 190 00	
19005	Fayetteville to Dechord	Memphis and Charleston	8		7			50 00	
19006	Nashville to Decatur, Ala	Louisville and Nashville	40		6	2,000 00		50 00	
19007	Nashville to Hickman, Ky	Nashville and Chattanooga	122.333		12	10,765 33		88 00	
19008	Nashville to Guthrie, Ky	Saint Louis and Southeastern	170.82		6	13,323 96		78 00	
19009	Guthrie, Ky., to Paris, Tenn	Louisville and Nashville	48		7	5,376 00		112 00	
19010	Memphis to Paris	do	82.5		13	15,097 50		183 00	
			89		12	20,517 50		145 00	
			43.5		12			175 00	
19011	Knoxville to Caryville	Knoxville and Ohio	32.94		6	1,557 60		40 00	
19012	Morristown to Wolf Creek	East Tennessee, Virginia and Georgia.	39.8		6	1,592 00		40 00	
19013	Tracy City to Cowan	Tennessee Coal and Railroad Company.	23		6	920 00		40 00	
19014	Memphis to Covington	Paducah and Memphis	38.31		6	1,532 40		40 00	
19015	Jasper to Bridgeport, Ala	Nashville and Chattanooga	12		6	360 00		30 00	
19016	Nashville to Lebanon	Tennessee and Pacific	32.75		6	1,637 50		50 00	
19018	Knoxville to Maryville	Knoxville and Charleston	16.27		6	813 50		50 00	Pay estimated.
				1,244.423			162,692 09		
	KENTUCKY.								
20001	Ashland to Geigersville	Lexington and Big Sandy	13.98		6	395 00		30 00	Pay for 13.17 miles.
20002	Covington to Nicholasville	Kentucky Central	99		12	11,766 60		109 00	
			13		6			75 00	
20003	La Grange to Lexington	Louisville, Cincinnati and Lexington.	67		12	6,164 00		92 00	
20004	Cincinnati, Ohio, to Louisville, Ky	do	110.375		12	22,075 00		200 00	
20005	Louisville to Nashville, Tenn	Louisville and Nashville	113.5		12	43,990 50		247 50	
			73.1		12			217 50	
20006	Bardstown Junction to Bardstown	do	17.3		6	692 00		40 00	
20007	Lebanon Junction to Fish Point Branch, Richmond Junction to Richmond.	do	109.9		6	7,624 60		54 00	
			33.8		6			50 00	
20008	Bowling Green to Guthrie	do	51		13	9,486 00		186 00	
20009	Paducah to Trimble, Tenn	Paducah and Memphis	76.64		6	3,832 00		50 00	
20010	Evansville, Ind., to Guthrie, Ky	Saint Louis and Southeastern	110.66		7	11,951 28		108 00	
20011	Louisville to Paducah Branch, Cecilian to Elizabethtown.	Louisville, Paducah and Southwestern.	226		6	14,860 16		64 00	
			6.19		6				
20012	Glasgow Junction to Glasgow	Louisville and Nashville	12		6	600 00		50 00	
20013	Anchorage to Shelbyville	Louisville, Cincinnati and Lexington.	19		12	969 00		51 00	
20014	Willard to Greenup C. H	Eastern Kentucky	34.5		6	1,380 00		40 00	
20015	Owensborough to Owensborough Junction.	Evansville, Owensborough and Nashville.	36.13		6	1,806 50		50 00	
20016	Maysville to Paris	Maysville and Lexington	50		12	2,950 00		59 00	
20017	Lexington to Mount Sterling	Louisville, Cincinnati and Lexington.	33.84		6	1,692 00		50 00	
20018	Cincinnati Junction to Louisville and Nashville Junction.	do	4.13		6	206 50		50 00	Pay estimated.
				1,311.045			142,440 54		

B.—*Railroad-service as in operation on the 30th of June*, 1876—Continued.

Number of route.	State and termini.	Corporate title of company carrying the mail.	Distance.	Total distance in each State.	Number of trips per week.	Annual pay.	Annual pay in each State.	Annual cost per mile on each route.	Remarks.
	OHIO.		*Miles.*	*Miles.*		*Dollars.*	*Dollars.*	*Dollars.*	
9001	Bellaire to Columbus	Central Ohio	137.875		12	36,812 62		267 00	
9002	Pittsburgh, Pa., to Chicago, Ill.	Pittsburgh, Fort Wayne and Chicago.	35 434.5		12 12	98,475 50		219 00 209 00	
9003	Rochester, Pa., to Bellaire, Ohio	Cleveland and Pittsburgh	68.75		18	6,875 00		100 00	
9005	Hudson to Columbus	Cleveland, Mount Vernon and Delaware.	145.88		6	17,067 96		117 00	
9006	Cleveland to Sharpsville	Atlantic and Great Western	49.75 31.61 3.045		6 6 6	6,707 75		100 00 50 00 50 00	Pay estimated on 3.045 miles.
9007	Cleveland to Wellsville	Cleveland and Pittsburgh	56.5 45.86		18 12	15,558 72		152 00	
9008	Elyria to Millbury	Lake Shore and Michigan Southern	74.98		12	56,609 90		705 00	$3,749 per annum included, for additional line of railway post-office cars.
9009	Bayard to New Philadelphia	Cleveland and Pittsburgh	32.5		6	1,625 00		50 00	
9010	Oneida Mills to Carrollton	Carrollton and Oneida	12		6	500 00		41 66	
9011	Sandusky to Newark	Baltimore and Ohio, lessees of Sandusky, Mansfield and Newark Railroad.	116		6	17,632 00		152 00	
9012	Xenia to Dayton	Pittsburgh, Cincinnati and Saint Louis.	17		12	1,598 00		94 00	
9013	Springfield to Sandusky	Cincinnati, Sandusky and Cleveland.	131.35		13	11,493 12		87 50	
9015	Columbus to Delaware	Cleveland, Columbus, Cincinnati and Indianapolis.	24.75		24	2,970 00		120 00	
9016	Columbus to Xenia	Columbus and Xenia	55		13	11,550 00		210 00	
9017	Columbus to Indianapolis, Ind	Columbus, Chicago and Indiana Central.	188		12	31,208 00		166 00	
9018	Galion to Indianapolis, Ind	Cleveland, Columbus, Cincinnati and Indianapolis.	204		12	37,740 00		185 00	
9019	Blanchester to Hillsborough	Marietta and Cincinnati	21		6	1,701 00		81 00	
9020	Portsmouth to Reed's Mills	do	56		6	8,848 00		158 00	
9022	Toledo to Quincy, Ill. Branch, Bluff City to Naples Branch, Clayton to Keokuk	Toledo, Wabash and Western	198 278 4 44		12 12 6 6	129,472 00		255 00 273 00 90 00 62 00	
9024	Fremont to Saint Mary's	Lake Erie and Louisville	89.35		6	4,467 50		50 00	
9025	Carey to Findlay	Cincinnati, Sandusky and Cleveland.	16		12	800 00		50 00	

9026	Dayton to Union City	Dayton and Union	48.17		6	2,800 20		60 00	
9027	Dayton to Toledo	Dayton and Michigan	71.43		18	21,444 00		150 00	
9028	Hamilton to Indianapolis, Ind	Cincinnati, Hamilton and Indianapolis.	71.52		12				
			90.49		6	4,974 50		50 00	
9029	Hamilton to Richmond, Ind	Cincinnati, Richmond and Chicago.	45.1		6	5,321 80		118 00	
9030	Cincinnati to Dayton	Cincinnati, Hamilton and Dayton.	26.53		43	10,062 37		187 50	
			33.92		31			150 00	
9031	Cincinnati to Springfield	Pittsburgh, Cincinnati and Saint Louis.	65.96		13	14,801 60		210 00	
			19		6			50 00	
9032	Cincinnati to Parkersburgh, W.Va	Marietta and Cincinnati	195.15		6	72,790 95		373 00	
9033	Morrow to Dresden	Pittsburgh, Cincinnati and Saint Louis, lessees of Cincinnati and Muskingum Valley Railroad.	149.4		6	11,205 00		75 00	
9034	Dayton to Richmond, Ind	Pittsburgh, Cincinnati and Saint Louis.	42		7	2,730 00		65 00	
9035	North Bend to Hagerstown, Ind	White Water Valley	72.58		6	4,536 25		62 50	
9036	Columbus to Pittsburgh, Pa	Pittsburgh, Cincinnati and Saint Louis.	193		14	44,790 00		230 00	
	Branch, Means to Cadiz		8		14			50 00	
9037	Springfield to Columbus	Cincinnati, Sandusky and Cleveland.	45.86		6	2,384 72		52 00	
9038	Salamanca, N. Y., to Dayton, Ohio	Atlantic and Great Western	389.55		12	35,059 50		90 00	
9039	Youngstown to Cross Cut	Pittsburgh, Fort Wayne and Chicago.	22.8		6	1,208 40		53 00	
9040	Columbus to Athens	Columbus and Hocking Valley	77.4		12	7,293 30		87 50	
	Branch, Logan to New Straitsville.		13.02		12			40 00	
9041	Niles to New Lisbon	Atlantic and Great Western, lessees of Niles and New Lisbon Railroad.	33.94		6	1,697 00		50 00	
9042	Newark to Shawnee	Newark, Somerset and Straitsville.	44.045		12	3,303 37		75 00	
9043	Clinton to Massillon	Cleveland, Mount Vernon and Delaware.	13.7		6	548 00		40 00	
9044	Marietta to Canal Dover	Marietta and Pittsburgh	99.96		6	4,998 00		50 00	
9045	Lorain to Uhricksville	Lake Shore and Tuscarawas Valley.	102.45		6	5,122 50		50 00	
9046	Cleveland to Cincinnati	Cleveland, Columbus, Cincinnati and Indianapolis.	245.25		12	60,124 25		237 00	$2,000 per annum included for additional daily line of railway post-office cars.
9047	Mansfield to Toledo	Pennsylvania Company, lessees of Mansfield, Cold Water and Lake Michigan Railroad.	88.1		6	5,286 00		60 00	
9048	Harbor to Youngstown	Pennsylvania Company, lessees of Ashtabula, Youngstown and Pittsburgh Railroad.	62.1		6	3,105 00		50 00	
9049	Toledo to Elkhart, Ind	Lake Shore and Michigan Southern.	133.6		12	83,500 00		575 00	$6,680 per annum included for additional daily line of railway post-office cars.
9050	Painesville to Youngstown	Painesville and Youngstown	60.12		6	2,404 80		40 00	Pay estimated on 9.38 miles.
9051	Chicago, Ohio, to Chicago, Ill	Baltimore, Pittsburgh and Chicago.	271.53		6	63,809 55		235 00	

B.—*Railroad-service as in operation on the 30th of June*, 1876—Continued.

Number of route	State and termini.	Corporate title of company carrying the mail.	Distance.	Total distance in each State.	Number of trips per week.	Annual pay.	Annual pay in each State.	Annual cost per mile on each route.	Remarks.
	OHIO—Continued.		*Miles.*	*Miles.*		*Dollars.*	*Dollars.*	*Dollars.*	
9052	Dyson's to Cumberland	Eastern Ohio	7.8		6	390 00		50 00	Pay estimated.
9053	Marietta to Parkersburgh, W. Va.	Marietta and Cincinnati	15.87		6	793 50		50 00	Do.
9054	Athens to Scott's Landing	do	37		6	1,850 00		50 00	Do.
9055	Columbus to Circleville	Scioto Valley	31.2		6	1,560 00		50 00	Do.
				5,507.255			979,696 63		
	INDIANA.								
22001	Indianapolis to Vincennes	Indianapolis and Vincennes	116.32		6	5,816 00		50 00	
22002	Indianapolis to Terre Haute	Terre Haute and Indianapolis	73		21	15,184 00		208 00	
22008	Indianapolis to Cincinnati, Ohio	Indianapolis, Cincinnati and La Fayette.	113.5		18	30,418 00		268 00	
22004	Indianapolis to Peru	Indianapolis, Peru and Chicago	54 24		18 6	8,400 00		100 00	$600 per annum included for side-service.
22005	Indianapolis to La Fayette	Indianapolis, Cincinnati and La Fayette.	65.625		18	17,193 75		262 00	
22006	Columbus to Madison	Jeffersonville, Madison and Indianapolis.	46		6	2,300 00		50 00	
22007	New Albany to Indianapolis	do	114		18	15,276 00		134 00	
22008	New Albany to Michigan City	Louisville, New Albany and Chicago.	61 227		12 6	14,400 00		50 00	
22009	Richmond to Chicago, Ill	Pittsburgh, Cincinnati and Saint Louis.	225.5		12	16,912 50		75 00	
22010	Cincinnati, Ohio, to East Saint Louis, Ill.	Ohio and Mississippi	72.4 268.6		19 19	88,424 00		279 00 254 00	
22011	Cambridge City to Columbus	Jeffersonville, Madison and Indianapolis.	68		6	2,720 00		40 00	
22012	Evansville to Terre Haute	Evansville and Crawfordsville	110		12	11,000 00		100 00	
22012*a*	Terre Haute to Rockville	Logansport, Crawfordsville and Southwestern.	23		6	1,150 00		50 00	
22013	State Line to Logansport	Pittsburgh, Cincinnati and Saint Louis.	61		6	4,575 00		75 00	
22014	Peru to La Porte	Chicago, Cincinnati and Louisville	73		6	4,015 00		55 00	
22015	Fairland to Martinsville	Cincinnati and Martinsville	38.5		6	1,925 00		50 00	
22016	Bradford, Ohio, to Logansport, Ind	Pittsburgh, Cincinnati and Saint Louis.	114.6		6	5,730 00		50 00	

22017	Indianapolis to Peoria, Ill	Indianapolis, Bloomington and Western.	212.2		6	28,647 00		135 00	
22018	Jeffersonville to North Vernon	Ohio and Mississippi	53.5		18	9,362 50		175 00	
22019	Fort Wayne to Connersville	Fort Wayne, Muncie and Cincinnati.	109		6	6,322 00		58 00	
22020	Richmond to Fort Wayne	Grand Rapids and Indiana	91.5		6	4,575 00		50 00	
22021	Anderson to Goshen	Cincinnati, Wabash and Michigan	114.32		6	5,716 00		50 00	Pay estimated on 23.08 miles.
22022	Princeton to Albion, Ill	Louisville, New Albany and Saint Louis Air Line.	31.03		6	1,086 05		35 00	
22023	Terre Haute to Danville, Ill	Evansville, Terre Haute and Chicago.	56.6		6	3,056 40		54 00	
22024	Indianapolis to Terre Haute	Indianapolis and Saint Louis	72		18	14,112 00		196 00	
22025	La Porte to Michigan City	Indianapolis, Peru and Chicago	12.36		6	618 00		50 00	
22026	Butler to Logansport	Detroit, Eel River and Illinois	94.5		6	4,914 00		52 00	
22027	Rockville to Logansport	Logansport, Crawfordsville and Southwestern.	92.1		6	4,605 00		50 00	
22028	La Fayette to Kankakee, Ill	Cincinnati, La Fayette and Chicago	75.75		6	19,846 50		262 00	
22029	Terre Haute to Martz	Cincinnati and Terre Haute	26.15		6	915 25		35 00	
22030	Attica to Veedersburgh	Indiana North and South	14		6	560 00		40 00	
22031	Evansville to Boonville	Lake Erie, Evansville and Southwestern.	18		6	900 00		50 00	
22032	Frankfort to Kokomo	Frankfort and Kokomo.	25.5		6	1,020 00		40 00	
22033	Rockport to Huntingburgh	Cincinnati, Rockport and Southwestern.	31.02		6	1,551 00		50 00	Pay estimated.
				3,078.575			353,245 95		
	ILLINOIS.								
23001	Chicago to Milwaukee, Wis	Chicago and Northwestern	87		25	20,184 00		232 00	
23002	Chicago to Freeport	do	42.5 78.5		18 12	25,168 00		208 00	
23003	Chicago to Union Pacific Transfer.	do	80 411		18 12	131,588 00		268 00	
23004	Elgin to Geneva	do	44		6	2,200 00		50 00	
23005	Sterling to East Saint Louis	Saint Louis, Rock Island and Chicago.	180.8 110.56		6 12	20,395 20		70 00	
23007	Chicago to Burlington, Iowa Branch, Aurora to Galena Junction. Branch, Galva to Keithsburgh	Chicago, Burlington and Quincy	38.7 169 13 59.3		36 18 12 6	72,215 00		328 00 328 00 50 00 58 00	
23008	Rushville to Yates City Branch, Elmwood to Buda	Chicago, Burlington and Quincy	63.75 45		8¾ 6	6,558 75		57 00 65 00	
23009	Peoria to Galesburgh	do	54		12¼	9,450 00		175 00	
23010	Galesburgh to Quincy	do	78 22		12 24	21,754 00		194 00 301 00	
23011	Burlington, Iowa, to Quincy, Ill	do	71.85		6	4,454 70		62 00	
23012	Streator to Aurora Branch, Aurora to Batavia	do	60.79 9		11¼ 11¼	4,187 40		60 00	
23013	Mendota to Clinton	do	64.19		6	3,209 50		50 00	
23014	Rock Falls to Cornton	do	47.23		6	2,361 50		50 00	
23015	Chicago to Davenport, Iowa	Chicago, Rock Island and Pacific	159 24		15¼ 15¼	58,977 00		319 00 344 00	

B.—*Railroad-service as in operation on the 30th of June*, 1876—Continued.

Number of route.	State and termini.	Corporate title of company carrying the mail.	Distance.	Total distance in each State.	Number of trips per week.	Annual pay.	Annual pay in each state.	Annual cost per mile on each route.	Remarks.
	ILLINOIS—Continued.		*Miles.*	*Miles.*		*Dollars.*	*Dollars.*	*Dollars.*	
23016	Bureau Junction to Peoria	Chicago, Rock Island and Pacific	47		12	4,700 00		100 00	
23017	Chicago to East Saint Louis	Chicago and Alton	283		18½	60,562 00		214 00	
23018	Bloomington to Godfrey	do	111.4		9¼	19,069 80		130 00	
			40.6		9¼			113 00	
23019	Washington to Dwight	do	70.08		6	4,031 50		50 00	
	Branch, Varna to Lacon		10.55		6				
23020	Chicago to Cairo	Illinois Central	55		14¼	74,375 00		225 00	
			310		14¼			206 00	
23021	Dubuque, Iowa, to Centralia, Ill	do	344		12	59,856 00		174 00	
23022	Joliet to Lake Station, Ind	Michigan Central	45		6	1,800 00		40 00	
23023	Decatur to East Saint Louis	Toledo, Wabash and Western	112		12	20,944 00		187 00	
23024	Pekin to Decatur	do	68.46		6	3,423 00		50 00	
23025	Hannibal, Mo., to Naples, Ill	do	45.5		6	6,260 50		131 00	
	Branch, Maysville to Pittsfield		6		6			50 00	
23026	La Fayette, Ind., to Bloomington, Ill.	Toledo, Wabash and Western	18.40		19	9,777 50		265 00	
			98.03		19			50 00	
23027	State Line to Warsaw	Toledo, Peoria and Warsaw	223 75		6	16,612 50		70 00	$600 per annum included for ferriage.
23028	Terre Haute, Ind., to East Saint Louis, Ill.	Indianapolis and Saint Louis	189		18	33,642 00		178 00	
23029	Urbana to Havana	Indianapolis, Bloomington and Western.	102.7		6	6,590 75		50 00	
	Branch, White Heath to Decatur.		32.35		6			45 00	
23030	East Saint Louis to Du Quoin	Saint Louis, Alton and Terre Haute.	71.8		14¼	8,544 20		119 00	
23031	East Saint Louis to Terre Haute, Ind.	Terre Haute and Indianapolis, lessees of Saint Louis, Vandalia and Terre Haute Railroad.	165.4		16	33,741 60		204 00	
23032	Saint Louis, Mo., to Evansville, Ind.	Saint Louis and Southeastern	164.75		12	15,695 25		84 00	
	Branch, McLeansborough to Shawneetown.		41.25		6			45 00	
23033	Beardstown to Shawneetown	Ohio and Mississippi	229.7		6	16,079 00		70 00	
23034	Springfield to Gilman	Gilman, Clinton and Springfield	111.6		6	5,580 00		50 00	
23035	Chicago to Milwaukee, Wis	Chicago, Milwaukee and Saint Paul.	88.85		18	17,770 00		200 00	
23036	Aurora to Foreston	Chicago and Iowa	81.04		12	8,000 72		98 00	

23037	Vincennes, Ind., to Cairo, Ill	Cairo and Vincennes	158		6	11,850 00		75 00	
23038	Peoria to Jacksonville	Peoria, Pekin and Jacksonville	84.14		6½	5,048 40		60 00	
23039	Carbondale to Grand Tower	Grand Tower Mining, Manufacturing and Transportation Company.	25		9	1,125 00		45 00	
23040	Peoria to Rock Island	Peoria and Rock Island	92		6	5,796 00		63 00	
23041	Quincy to Hannibal, Mo.	Quincy, Alton and Saint Louis	19.4		19	5,823 25		105 00	
	Branch, Fall Creek to Louisiana		30.85		6			85 00	
23042	Chicago to Danville	Chicago, Danville and Vincennes	127		12	9,136 00		75 00	Pay for 108 miles.
	Branch, Bismarck to Snoddy's Mills.		25.9		6			40 00	
23043	Streator to Altamont	Chicago and Paducah	156.8		6	7,840 00		50 00	
23044	Mattoon to Hervey City	Chicago and Illinois Southern	33.05		6	1,652 50		50 00	
23045	Carbondale to Marion	Carbondale and Shawneetown	18		6	810 00		45 00	
23046	Jacksonville to Virden	Jacksonville, Northwestern and Southeastern.	31.39		6	1,412 55		45 00	
23047	Chester to Tamaroa	Iron Mountain, Chester and Eastern.	42		6	2,100 00		50 00	
23048	Terre Haute, Ind., to Peoria, Ill	Illinois Midland	179.93		6	8,996 50		50 00	
23049	Springfield to Havana	Springfield and Northwestern	48.2		8¾	2,169 00		45 00	
23050	Vincennes, Ind., to Danville, Ill	Paris and Danville	114.23		6	5,874 26		52 00	Pay estimated on 31.85 miles.
23051	Streator to Pekin	Chicago, Pekin and Southwestern	65.28		6	3,264 00		50 00	Pay estimated.
23052	Courtland Station to Sycamore	Sycamore and Courtland	5		12	420 00		54 00	$150 per annum included for mail-messenger service.
23053	East Saint Louis to Cairo	Cairo and Saint Louis	148.5		6	8,316 00		56 00	
23054	Chicago to Byron	Chicago and Pacific	92.75		6	4,173 75		45 00	
23055	Decatur to Montezuma	Indianapolis, Decatur and Springfield.	87		6	4,350 00		50 00	
23056	Geneva to Batavia	Chicago and Northwestern	3.5		6	175 00		50 00	
23057	Rochelle to Rockford	Chicago, Rockford and Northern	27.64		6	1,382 00		50 00	Pay estimated.
23058	Alvin to Fisher	Havana, Rantoul and Eastern	40.5		6	2,025 00		50 00	Do.
				6,842.04			903,509 58		
	MICHIGAN.								
24001	Toledo, Ohio, to Detroit, Mich	Lake Shore and Michigan Southern	65.27		50¼	9,790 50		150 00	
24002	Monroe to Adrian	do	35.23		12	2,818 40		80 00	
24003	Adrian to Jackson	do	47.25		6	3,071 25		65 00	
24004	White Pigeon to Grand Rapids	do	95.67		9	8,610 30		90 00	
24005	Detroit to Chicago, Ill	Michigan Central	284		32½	63,332 00		223 00	
24006	Detroit to Grand Haven	Detroit and Milwaukee	189.67		15	21,812 05		115 00	
24007	Detroit to Port Huron	Grand Trunk	64.5		15	5,805 00		90 00	
24008	Jackson to Fort Wayne, Ind	Fort Wayne, Jackson and Saginaw	96.82		6	4,937 82		51 00	
24009	Jackson to Gaylord	Michigan Central	169		8¾	12,858 40		60 00	
			67.96		8¾			40 00	
24010	Jackson to Grand Rapids	do	94.86		12	8,537 40		90 00	
24012	Lenox to Romeo	Saint Clair and Chicago Air Line	16.13		12	806 50		50 00	
24013	Detroit to Bay City	Detroit and Bay City	108.97		12	9,262 45		85 00	
24015	Monroe to Ludington	Flint and Père Marquette	254.29		12½	25,758 04		96 00	
	Branch, Otter Lake Junction to Otter Lake.		14.53		6			40 00	
	Branch, East Saginaw to Bay City.		12.75		27			60 00	

B.—*Railroad-service as in operation on the 30th of June, 1876*—Continued.

Number of route.	State and termini.	Corporate title of company carrying the mail.	Distance.	Total distance in each State.	Number of trips per week.	Annual pay.	Annual pay in each State.	Annual cost per mile on each route.	Remarks.
	MISSISSIPPI—Continued.		*Miles.*	*Miles.*		*Dollars.*	*Dollars.*	*Dollars.*	
18004	Mobile, Ala., to Columbus, Ky.. Branch, Artesia to Columbus, Miss.	Mobile and Ohio	472.7 14		7 14	39,461 40		82 00 50 00	
18006	Grand Gulf to Port Gibson	Grand Gulf and Port Gibson	8		6	600 00		75 00	
18007	Muldon to Aberdeen	Mobile and Ohio	9		14	360 00		40 00	
18008	Middleton Station, Tenn., to Ripley, Miss.	Southern Railway Security Company	24.3		6	972 00		40 00	
18009	Durant to Kosciusko	New Orleans, Saint Louis and Chicago; operating Mississippi Central Railroad.	21.57		6	862 80		40 00	
				1,134.95			120,769 90		
	LOUISIANA.								
30001	New Orleans to Canton, Miss	New Orleans, Saint Louis and Chicago.	206		13	37,286 00		181 00	
30002	New Orleans to Donaldsonville	New Orleans and Texas	63.66		6	3,183 00		50 00	
30003	New Orleans to Brashear	Morgan's Louisiana and Texas Railroad.	83		7	9,530 00		110 00	$400 per annum included for side-supply.
30004	Terre Bonne to Houma	do	15.28		7	764 00		50 00	
30005	Baton Rouge to Livonia	Baton Rouge, Grosse Tête and Opelousas.	28		3	560 00		20 00	
30006	Clinton to Port Hudson	Clinton and Port Hudson	21		3	630 00		30 00	
30007	Saint Francisville to Woodville, Miss.	West Feliciana	27.57		3	964 95		35 00	
30008	Vicksburgh, Miss., to Monroe, La.	Vicksburgh, Shreveport and Texas	75.5		7	4,350 50		51 00	$500 per annum included for mail-messenger service and ferriage.
				520.01			57,268 45		
	TEXAS.								
31001	Houston to Galveston	Galveston, Houston and Henderson.	50		19	7,250 00		145 00	
31002	Harrisburgh to Kingsbury	Galveston, Harrisburgh and San Antonio.	168.6		12	14,162 40		84 00	Pay estimated on 13.4 miles.
31003	Houston to Denison City	Houston and Texas Central	337.55		6	42,193 75		125 00	

25009	Chicago, Ill., to Green Bay, Wis.	Chicago and Northwestern	245		14½	56,350 00		230 00	
25010	Caledonia Station, Ill., to Winona Junction, Wis.	do	135.45 54.9		12 6	21,722 40		132 00 70 00	
25011	Kenosha to Rockford, Ill.	do	73.6		6	5,520 00		75 00	
25012	Winona, Minn., to Winona Junction, Wis.	La Crosse, Trempealeau and Prescott.	30.45		12	5,937 75		195 00	
25013	Milwaukee to Fond du Lac	Chicago and Northwestern	63.53		6	4,320 04		68 00	
25014	Elroy to Saint Paul, Minn. Branch, Stillwater Junction to Stillwater.	West Wisconsin	196.4 3.25		12 6	17,556 70		88 00 30 00	
25015	Green Bay to Winona, Minn	Green Bay and Minnesota	216.41		6	11,253 32		52 00	
25016	Milwaukee to Green Bay Branch, Hilbert to Menasha	Wisconsin Central, operated by Phillips & Colby Construction Company.	111.54 16		6 6	8,544 72		68 00 60 00	
25017	Menasha to Worcester	do	164.1		6	8,205 00		50 00	
25018	Milwaukee to Two Rivers Branch, Manitowoc to Appleton	Milwaukee, Lake Shore and Western.	85 44.5		12 6	8,377 50		75 00 45 00	
25019	Sheboygan to Princetown	Sheboygan and Fond du Lac	79.05		6	4,012 50		50 00	$60 per annum included for mail-messenger service.
25020	Warren, Ill., to Mineral Point, Wis	Mineral Point	33		6	1,650 00		50 00	
25021	Calamine to Platteville	do	18.7		6	935 00		50 00	
25022	Tomah to Wausau	Wisconsin Valley	90.04		6	4,502 00		50 00	
25023	Madison to Portage City	Chicago, Milwaukee and Saint Paul, operating Chicago and Superior Railroad.	39.5		6	1,975 00		50 00	
25024	Racine to Rock Island Junction, Ill. Branch, Elkhorn to Eagle	Western Union	189.4 18.1		12 6	16,057 00		80 00 50 00	Pay estimated on branch.
25025	Galena, Ill., to Platteville, Wis.	Galena and Southern Wisconsin	30.69		6	1,534 50		50 00	
25026	Chippewa Falls to Eau Claire	Chippewa Falls and Western	11.67		6	583 50		50 00	Pay estimated.
25027	Stevens Point to Hancock	Wisconsin Central, operated by Phillips & Colby Construction Company.	29.6		6	1,480 00		50 00	Do.
25028	Hudson to Clayton	North Wisconsin	44		6	2,200 00		50 00	Do.
				2,679.63			271,711 58		
	IOWA.								
27001	Burlington to Plymouth	Burlington, Cedar Rapids and Minnesota.	219.54		6	18,660 90		85 00	
27002	Cedar Rapids to Postville	do	99.8		6	5,089 80		51 00	
27003	Cedar Rapids to Traer	do	24.77		6	1,238 50		50 00	
27004	Muscatine to Riverside	do	32.23		6	1,611 50		50 00	

B.—*Railroad-service as in operation on the 30th of June*, 1876—Continued.

Number of route.	State and termini.	Corporate title of company carrying the mail.	Distance.	Total distance in each State.	Number of trips per week.	Annual pay.	Annual pay in each State.	Annual cost per mile on each route.	Remarks.
	IOWA—Continued.		*Miles.*	*Miles.*		*Dollars.*	*Dollars.*	*Dollars.*	
27005	Burlington to Council Bluffs...	Burlington and Missouri River...	293.14	.....	6	76,885 00	.....	250 00	
	Branch, Pacific Junction to East Plattsmouth.		4	.....	6			50 00	
	Branch, Red Oak to Eastport...		50	.....	6			68 00	
27006	Chariton to Leon	.....do	37.44	.....	6	1,872 00	.....	50 00	
27007	Creston to Hopkins, Mo	.....do	44.4	.....	6	2,886 00	.....	65 00	
27008	Viele Junction to Unionville, Mo..	Burlington and Southwestern	104.75	.....	6	5,237 50	.....	50 00	
27009	Villisca to Clarinda	Burlington and Missouri River	16	.....	6	800 00	.....	50 00	
27010	Albia to Northwood	Central Railroad Company of Iowa	189.2	.....	6	12,487 20	.....	66 00	
27011	Keokuk to Viele	Chicago, Burlington and Quincy..	17	.....	6	3,798 00	.....	78 00	
	Branch, Viele to Burlington		25.75	.....	6			96 00	
27012	Clinton to La Crescent Junction, Minn.	Chicago, Dubuque and Minnesota.	179.77	.....	12	12,224 36	.....	68 00	
27013	Stanwood to Tipton	Chicago and Northwestern	8.81	.....	6	440 50	.....	50 00	
27014	Davenport to Missouri River	Chicago, Rock Island and Pacific..	54	.....	12	87,210 00	.....	295 00	
			264					270 00	
27015	Des Moines to Indianola	.....do	21.4	.....	6	2,532 00	.....	55 00	
	Branch, Summerset Junction to Winterset.		27.01	.....	6			50 00	
27016	Washington to Oskaloosa	.....do	54.01	.....	6	2,700 50	.....	50 00	Pay estimated on 25.01 miles.
27017	Wilton Junction to Leavenworth, Kans.	.....do	322.77	.....	6	27,435 45	.....	85 00	
27018	Davenport to Maquoketa	Davenport and Saint Paul	42.76	.....	6	2,138 00	.....	50 00	
27019	Keokuk to Des Moines	Keokuk and Des Moines	162.81	.....	6	12,373 56	.....	76 00	
27020	Farley to Cedar Rapids	Dubuque and Southwestern	55.37	.....	6	2,879 24	.....	52 00	
27021	Dubuque to Sioux City	Illinois Central	327.12	.....	6	40,890 00	.....	125 00	
27022	Waterloo to Mona	.....do	80	.....	6	5,840 00	.....	73 00	
27023	Beulah to Elkader	Iowa Eastern	19.59	.....	6	979 50	.....	50 00	
27024	Clinton to Anamosa	Iowa Midland	74.1	.....	6	3,705 00	.....	50 00	
27025	Calmar to Algona	Chicago, Milwaukee and Saint Paul.	127.8	.....	6	7,284 60	.....	57 00	
27026	Conover to Decorah	.....do	9.5	.....	6	522 50	.....	55 00	
27027	Davenport to Fayette	Davenport and Saint Paul	129.33	.....	6	6,595 83	.....	51 00	
27028	Sabula to Marion	Chicago, Milwaukee and Saint Paul.	87.75	.....	6	4,387 50	.....	50 00	

27029	Missouri Valley to Sioux City Branch, California Junction to Wianer.	Sioux City and Pacific	76 83.4		6 6	12,296 00		106 00 50 00	
27030	Des Moines to Ames	Des Moines and Minnesota	37.12		6	1,856 00		50 00	
27031	Des Moines to Fort Dodge	Des Moines and Fort Dodge	89.04		6	4,719 12		53 00	
27032	Grinnell to Montezuma	Central Railroad Company of Iowa	18		6	900 00		50 00	Pay estimated.
27033	Albia to Knoxville	Chicago, Burlington and Quincy	33.97		6	1,698 50		50 00	Do.
27034	Sioux City to Portlandville	Sioux City and Pembina	30.01		6	1,500 50		50 00	Do.
				3,573.55			373,605 06		
	MINNESOTA.								
26001	Du Luth to Bismarck, Dak	Northern Pacific	229 195.12		6 3	23,834 80		70 00 40 00	
26002	Saint Paul to Breckinridge	Saint Paul and Pacific	219.25		8	12,278 00		56 00	
26003	Saint Paul to Sauk Rapids	do	78		9½	5,694 00		73 00	
26004	East Saint Cloud Station to Melrose.	do	35		6¼	1,890 00		54 00	
26005	Saint Paul to Saint James	Saint Paul and Sioux City	122		12	12,932 00		106 00	
26006	White Bear Lake to Sioux City Junction.	Minneapolis and Saint Louis	41		9¾	2,050 00		50 00	
26007	Saint Paul to Du Luth	Lake Superior and Mississippi	155.73		12	13,859 97		89 00	
26008	White Bear Lake to Stillwater	do	13.2		12	660 00		50 00	
26009	Minneapolis to North McGregor, Iowa.	Chicago, Milwaukee and Saint Paul.	215.7		6	20,491 50		95 00	
26010	Hastings to Glencoe	do	74.59		6	2,983 60		40 00	
26011	Winona to La Crescent	do	25		12	3,750 00		150 00	
26012	Austin to Mason City, Iowa	do	41.38		12	2,069 00		50 00	
26013	Saint Paul to Winona	do	103.84		12	21,079 52		203 00	
26014	Saint Peter to Marshall	Winona and Saint Peter	30 79.66		6 3	4,339 80		65 00 30 00	
26015	Winona to Saint Peter	do	144.26		6	11,540 80		80 00	
26016	La Crosse, Wis., to Winnebago City, Minn.	Southern Minnesota	170.5		6	11,594 00		68 00	
26017	Mankato to Wells	Central Railroad Company of Minnesota.	41.06		6	1,642 40		40 00	
26018	Saint James to Lemars, Iowa	Sioux City and Saint Paul	123		6	9,840 00		80 00	
				2,137.29			162,529 39		
	NEBRASKA.								
34001	Council Bluffs, Iowa, to Ogden City, Utah.	Union Pacific	1,035.2		7	351,968 00		340 00	
34002	Plattsmouth to Kearney	Burlington and Missouri River Railroad Company in Nebraska.	191		6	13,370 00		70 00	
34003	Omaha to Herman	Omaha and Northwestern	40.2		6	2,010 00		50 00	
34004	Omaha to Concord	Burlington and Missouri River Railroad Company in Nebraska.	21.5		6	1,925 50		75 00	$313 per annum included for ferriage.
34005	Brownville to Seward	Nebraska	105.85		6	6,033 45		57 00	
34006	Crete to Beatrice	Burlington and Missouri River Railroad Company in Nebraska.	31.76		6	1,588 00		50 00	
				1,425.51			376,894 95		

B.—*Railroad-service as in operation on the 30th of June*, 1876—Continued.

Number of route.	State and termini.	Corporate title of company carrying the mail.	Distance.	Total distance in each State.	Number of trips per week.	Annual pay.	Annual pay in each State.	Annual cost per mile on each route.	Remarks.
	KANSAS.		*Miles.*	*Miles.*		*Dollars.*	*Dollars.*	*Dollars.*	
33001	Kansas City, Mo., to Cheyenne City, Wyo.	Kansas Pacific	745		9	144,520 00		190 00	
	Branch, Lawrence to Leavenworth.		33		7			90 00	
33002	Atchison to Waterville	Central Branch Union Pacific	100		7	10,000 00		100 00	
33003	Lawrence to Coffeyville	Leavenworth, Lawrence and Galveston.	142.9		6	11,859 10		79 00	
	Branch, Cherry Vale to Independence.		10		6			57 00	
33004	Elwood to Hastings, Nebr	Saint Joseph and Denver City	227.2		6	13,177 60		58 00	
33005	Kansas City, Mo., to Baxter Springs, Kans.	Missouri River, Fort Scott and Gulf.	160.2		13	15,379 20		96 00	
33006	Junction City to Parsons	Missouri, Kansas and Texas	156.5		6	9,077 00		58 00	
33007	Atchison to Pueblo, Colo	Atchison, Topeka and Santa Fé	618.56		6	48,288 30		75 00	Pay estimated on 137.32 miles.
	Branch, Newton to Wichita		27.09		6			70 00	
33008	Kansas City, Mo., to Ottawa, Kans.	Leavenworth, Lawrence and Galveston.	33.3		6	2,797 20		84 00	Pay from Olathe to Ottawa.
33009	Atchison to Lincoln, Nebr	Atchison and Nebraska	152.28		7	9,136 80		60 00	
33010	Leavenworth to Holton	Kansas Central	56.5		6	2,825 00		50 00	
33012	Junction City to Clay Centre	Junction City and Fort Kearney	33.85		6	2,031 00		60 00	
33013	Topeka to Kansas City, Mo.	Kansas Midland	49.84		6	2,492 00		50 00	Pay estimated.
33014	Fort Scott to Memphis	Fort Scott, Southeastern and Memphis.	6.52		6	326 00		50 00	Do.
33015	Ottawa to Williamsburgh	Kansas City, Burlington and Santa Fé.	17.38		6	869 00		50 00	Do.
				2,570.12			272,778 20		
	NEVADA.								
45001	Virginia City to Reno	Virginia and Truckee	51.75		6	3,741 00		72 29	
45002	Palisades to Eureka	Eureka and Palisades	91.27		6	4,563 50		50 00	Pay estimated.
				143.02			8,304 50		
	CALIFORNIA.								
46001	San Francisco to Ogden City, Utah	Central Pacific	877.5		7	[illegible]		[illegible]	

46004	Folsom City to Shingle Springs	Placerville and Sacramento Valley	26.5		7	1,325 00		50 00	
46005	Sacramento City to Folsom City	Sacramento Valley	23.2		12	1,450 00		62 50	
46006	Sacramento City to San Francisco	California Pacific	83		14	7,553 00		91 00	
46007	Davisville to Grafton	do	18.2		6	910 00		50 00	
46008	Napa Junction to Calistoga	do	36		6	1,800 00		50 00	
46009	Marysville to Oroville	California Northern	30		6	1,500 00		50 00	
46010	Lathrop to Goshen	Central Pacific	144.91		6	11,592 80		80 00	
46011	San Francisco to Cloverdale	San Francisco and North Pacific	90		6	4,500 00		50 00	
46012	Stockton to Milton	Stockton and Copperopolis	30		6	2,450 00		50 00	
	Branch, Peters' to Oakdale		19		6				
46013	Wilmington to Los Angeles	Southern Pacific	21.75		6	870 00		40 00	
46014	Goshen to Caliente	do	96		7	7,200 00		75 00	Pay estimated on 54.7 miles.
46015	Elmira to Winters	Vaca Valley	18		12	900 00		50 00	Pay estimated.
46016	Sancelito to Tomales	North Pacific Coast	49.18		6	2,459 00		50 00	Do.
46017	Los Angeles to Anaheim	Southern Pacific	21.7		6	1,085 00		50 00	Do.
46018	San Fernando to San Bernardino	do	81.12		6	4,056 00		50 00	Do.
46019	Visalia to Goshen	Visalia	8.37		6	418 50		50 00	Do.
46020	Colfax to Nevada City	Nevada County Narrow Gauge	22.81		6	1,140 50		50 00	Do.
46021	Los Angeles to Santa Monica	Los Angeles and Independence	16.8		6	840 00		50 00	Do.
				2,030.04			288,021 30		
	OREGON.								
44001	Portland to Roseburgh	Oregon and California	199.1		6	19,910 00		100 00	
44002	Portland to Saint Joseph	Oregon Central	48.61		6	2,430 50		50 00	Pay estimated.
				247.71			22,340 50		
	WASHINGTON TERRITORY.								
43001	Kalama to New Tacoma	Northern Pacific	105.6		6	6,336 00		60 00	
				105.06			6,336 00		
	DAKOTA TERRITORY.								
35001	Sioux City, Iowa, to Yankton, Dak	Dakota Southern	61.48		6	4,918 40		80 00	
				61.48			4,918 40		
	UTAH TERRITORY.								
41001	Ogden City to Salt Lake City	Utah Central	36.5		6	2,920 00		80 00	
41002	Salt Lake City to York	Utah Southern	48		6	4,428 00		63 00	
			27		6			52 00	
41003	Ogden City to Franklin, Idaho	Utah Northern	79.94		7	5,595 80		70 00	
				191.44			12,943 80		
	COLORADO TERRITORY.								
38001	Denver to El Moro	Denver and Rio Grande	209.2		7	16,894 00		70 00	Pay estimated on 90.2 miles.
	Branch, Pueblo to Cañon City		45		6			50 00	
38003	Hughes Station to Boulder	Denver and Boulder Valley	27.75		6	2,081 25		75 00	

B.—*Railroad-service as in operation on the 30th of June*, 1876—Continued.

Number of route.	State and termini.	Corporate title of company carrying the mail.	Distance.	Total distance in each State.	Number of trips per week.	Annual pay.	Annual pay in each State.	Annual cost per mile on each route.	Remarks.
	COLORADO TERRITORY—Continued.		*Miles.*	*Miles.*		*Dollars.*	*Dollars.*	*Dollars.*	
38004	Denver to Black Hawk	Colorado Central	38.5		7	4,460 00		60 00	
	Branch, Golden Junction to Longmont.		39		7			50 00	
	Branch, Fork's Creek to Floyd's Hill.		4		7			50 00	
38005	Kit Carson to West Las Animas	Arkansas Valley	56	419.45	7	3,360 00	26,795 25	60 00	

THOS. J. BRADY,
Second Assistant Postmaster General.

C.—*Steamboat-service as in operation on the 30th of June, 1876.*

Number of route.	State and termini.	Name of contractor.	Distance.	Total distance in each State.	Number of trips per week.	Annual pay.	Annual pay in each State.	Remarks.
	MAINE.		*Miles.*	*Miles.*		*Dollars.*	*Dollars.*	
15	Boston, Mass., to Machias Port, Me.	Eastern Express Company			2			One cent on each letter.
246	Rockland to Sullivan	do			2			Do.
250	Bath to Booth Bay	Eastern Steamboat Company	12			700 00		Six times a week during navigation, and six additional trips a week from July 5 to September 20.
	Wiscasset to Booth Bay		20					Six times a week from December 1 to March 31.
				32			700 00	
	NEW HAMPSHIRE.							
316	Alton Bay to Wolfborough	Boston and Maine Railroad Company	10		6	1,200 00		Three times a week during navigation.
	Centre Harbor to Meredith Village		20					
321	Wier's Bridge to Wolfborough	Winnipiseogee Steamboat Company	30		6	650 00		During navigation.
				60			1,850 00	
	MASSACHUSETTS.							
688	Wood's Hole to Nantucket	Nantucket and Cape Cod Steamboat Company.	30			2,500 00		Six times a week for four months; three times a week for eight months.
				30			2,500 00	
	RHODE ISLAND.							
811	Fall River, Mass., to New York, N. Y.	Old Colony Steamboat Company	186			10,000 00		Six times a week for nine months; seven times a week for three months.
826	Newport to Wickford	Newport and Wickford Railroad and Steamboat Company.	12		6	6,000 00		
				198			16,000 00	
	NEW YORK.							
1389	Burlington, Vt., to Plattsburgh, N. Y.	Champlain Transportation Company	25		6	1,153 00		During navigation.
1694	Geneva to Watkins	Seneca Lake Steam Navigation Co	65		6	3,200 00		
1790	Lake George to Fort Ticonderoga	Champlain Transportation Company	40		6	400 00		For four months.
1822	Penn Yan to Hammondsport	Lake Keuka Steam Navigation Company.	21		6	200 00		During navigation.
				151			4,953 00	
	NEW JERSEY.							
2126	New York, N. Y., to Sandy Hook, N. J.	New Jersey Southern Railroad Co	19.5		12	1,306 50		
2153	New York, N. Y., to Keyport, N. J.	Christy Garity, jr.	22			576 28		Six times a week for eight months; three times a week for four months.
				41.5			1,882 78	

C.—*Steamboat service as in operation on the 30th of June, 1876*—Continued.

Number of route.	State and termini.	Name of contractor.	Distance.	Total distance in each State.	Number of trips per week.	Annual pay.	Annual pay in each State.	Remarks.
	PENNSYLVANIA.		*Miles.*	*Miles.*		*Dollars.*	*Dollars.*	
2501	Pittsburgh to Greensborough	Adam Jacobs	88.5	88.5		4,369 94	4,369.94	Six times a week during navigation; three times a week during residue of year.
	MARYLAND.							
3521	Baltimore to Queenstown	B. S. Ford	40		4	750 00		
3696	Baltimore to Pitt's Wharf, Va	Eastern Shore Steamboat Company	150	190		3,000 00	3,750 00	Four times a week to Crisfield, 108 miles; twice a week residue, 42 miles, from May 1 to Dec. 31, and twice a week to Crisfield; once a week residue, from Jan. 1 to April 30.
	WEST VIRGINIA.							
12098	Wheeling to Parkersburgh	John Mulrine	92		6	7,200 00		
12099	Parkersburgh to Gallipolis, Ohio	Parkersburgh Transportation Company.	89.5		3	5,200 00		
12100	Kanawha Court-House to Gallipolis, Ohio.	A. J. Beckett	59	240.5	3	1,300 00	13,700 00	
	VIRGINIA.							
11095	West Point to Baltimore, Md	York River Steamship Company	200		3	500 00		
11096	Norfolk to Baltimore, Md	Baltimore Steam Packet Company	200		6	18,000 00		
11097	Norfolk to Eastville	Old Dominion Steamship Company	57		3	3,500 00		
11098	Norfolk to Matthews Court-House	do	60		3	3,000 00		
11099	Norfolk to Richmond	John A. Post	158		3	4,500 00		
11100	Fredericksburgh to Baltimore, Md	Henry Williams	261	976	2	2,600 00	32,100 00	
	NORTH CAROLINA.							
13100	Wilmington to Fayetteville	John C. Blocker	112		2	2,300 00		
13102	Wilmington to Smithville	Merritt Cheek	30		6	2,389 00		
13144	Plymouth to Franklin Depot, Va	W. J. Hogan	106		3	4,990 00		
13165	Norfolk, Va., to Peplar Branch, N. C.	Isaiah Cain	100	348	2	1,650 00	11,329 00	

14104	Charleston to Edisto Island	Peter Toglio	30	45	1	1,000 00	1,500 00	
	GEORGIA.							
15184	Rome to Gadsden, Ala	J. M. Elliott	155		2	3,600 00		
15266	Traders Hill to Fernandina, Fla	William Mangum	51			1,969 00		Once a week on 40 miles; six times a week on 11 miles.
				206			5,569 00	
	FLORIDA.							
16017	Palatka to Haw Creek	C. R. Griffing & Co	35		2	500 00		
16018	New York, N. Y., to Galveston, Tex	C. H. Mallory & Co	2,036		1	10,400 00		
16019	Cedar Keys to Key West	James McKay	470		1	18,000 00		
16021	Eufaula, Ala., to Chattahoochee, Fla	Samuel J. Whiteside	130		2	5,800 00		
16022	Chattahoochie to Apalachicola	Andrew J. Parlin	151		1	4,900 00		
16023	Palatka to Jacksonville	Jacob Brock	102		6	8,000 00		
16024	Palatka to Sanford	do	143		3	5,915 94		
16025	Palatka to Okahumpka	S. J. Bouknight	275			2,400 00		Twice a week for four months; once a week for eight months.
				3,342			55,915 94	
	MISSISSIPPI.							
18020	Vicksburgh to Greenwood	S. H. Parisot	262		2	4,800 00		
				262			4,800 00	
	LOUISIANA.							
30093	New Orleans to Vicksburgh, Miss	Leathers, Tobin & Cannon	408		3	35,000 00		
30095	New Orleans to Hope Villa	Milton B. Muncy	119		2	3,000 00		
30097	Brashear to New Iberia	Monroe P. Young	74		6	6,600 00		
30098	New Orleans to Saint Francisville	John J. Brown	170		2	10,000 00		
30099	New Orleans to Covington	Mandeville and New Orleans Daily Packet Company.	62		3	3,950 00		
30100	New Orleans to Port Eads	J. B. Price	116 45		3 1	5,056 96		
				994			63,606 96	
	TEXAS.							
31095	Indianola to Point Isabel	Joseph T. Reeside	114 160		3 2	17,950 00		
31096	Galveston to Brashear, La	Charles Morgan	225			50,000 00		Three times a week for six months; twice a week for residue of year.
31097	Galveston to Indianola	do	125			10,000 00		Three times a week for eight months; twice a week for residue of year.
31098	Galveston to Liberty	David P. Thompson	93		2	7,360 00		
31100	Sabine Pass to Wiess Bluff	James B. Price	118		2	7,000 00		
				835			92,310 00	
	ARKANSAS.							
29100	Memphis, Tenn., to Friar's Point, Miss	James Lee, jr	112		3	1,000 00		
29101	Memphis, Tenn., to Chicot, Ark	John A. Scudder	220		3	17,000 00		
29102	Chicot to Vicksburgh, Miss	do	189		3	18,000 00		

C.—*Steamboat-service as in operation on the 30th of June,* 1876—Continued.

Number of route.	State and termini.	Name of contractor.	Distance.	Total distance in each State.	Number of trips per week.	Annual pay.	Annual pay in each State.	Remarks.
	ARKANSAS—Continued.		*Miles.*	*Miles.*		*Dollars.*	*Dollars.*	
29103	White River to Pine Bluff	John D. Adams	182.5		2	5,000 00		
29104	Pine Bluff to Little Rock	do	105		2	2,000 00		
29105	White River to Jacksonport	M. R. Harry	356		2	5,000 00		
				1,164.5			48,000 00	
	MISSOURI.							
28099	Saint Louis to Grand Tower, Ill	John A. Scudder	125		3	1,250 00		
28100	Saint Louis to Memphis, Tenn	do	450		3	25,000 00		
				575			26,250 00	
	TENNESSEE.							
19098	Loudon to King's Creek	R. S. & J. N. Lowery	49		6	3,950 00		
19099	Chattanooga to King's Creek	C. W. Coker	110		2	2,993 34		
				159			6,943 34	
	KENTUCKY.							
20097	Louisville to Evansville, Ind	Sherley & Hite	202		6	15,000 00		
20098	Evansville, Ind., to Cairo, Ill	Evansville, Cairo and Memphis Packet Company.	202		6	15,000 00		
20099	Bowling Green to Evansville, Ind	Green and Barren River Navigation Company.	225		2	4,800 00		
20100	Paducah to Eastport, Miss	William G. Brown	265		2	6,000 00		
				894			40,800 00	
	OHIO.							
9061	Portsmouth to Cincinnati	David Gibson	127.75		3	4,500 00		
9062	Cincinnati to Maysville, Ky	do	65.5		3	2,000 00		
9063	Portsmouth to Gallipolis	B. Butterfield	36.65 51.35		3 6	7,300 00		
				281.25			13,800 00	
	MICHIGAN.							

24097	Detroit to Sault de Ste. Marie	National Board of Steam Navigation	350		2	880 00		From June 15 to November 15.
24099	Bay City to Alpena	Darius Cole	143		6	10,000 00		From April 16 to November 15.
24100	Grand Haven to Milwaukee, Wis	Engelman Transportation Company	65		6	2,340 00		From May 1 to October 31.
				793			18,580 00	
	CALIFORNIA.							
46101	San Francisco to Portland, Oreg	George K. Otis	670		1	25,000 00		
46102	San Francisco to Sacramento City	California Steam Navigation Company	230		6	8,000 00		
46273	San Francisco to San Quentin	Contra Costa Steam Navigation Company.	12		7	1,200 00		
46275	Rowlands to Rowlands	W. W. Lapham	100			3,000 00		Six times a week for six months; once a week for residue of year.
				1,012			37,200 00	
	OREGON.							
44101	Portland to Astoria	Oregon Steamship Company	120		6	14,906 83		
44102	Portland to The Dalles	Zenos F. Moody	120		6	15,535 00		
				240			30,441 83	
	WASHINGTON TERRITORY.							
43101	Olympia to Victoria, British Columbia	Philip D. Moore	20 130		3 2	24,313 00		
43108	Seattle to Schome	Samuel Coulter	143		1	3,600 00		
43115	Port Townsend to Semiahmo	do	129		1	4,900 00		
43132	Portland, Oreg., to Sitka, Alaska	George K. Otis	1,335			34,800 00		One trip per month.
				1,757			67,613 00	

THOS. J. BRADY,
Second Assistant Postmaster-General.

D.—*Table showing the increase and decrease in mail-transportation and cost during the year ended June 30, 1876.*

States and Territories.	CELERITY, CERTAINTY, AND SECURITY.				STEAMBOAT.				RAILROAD.				Total annual transportation.		Total annual cost.	
	Length of routes.		Cost.		Length of routes.		Cost.		Length of routes.		Cost.					
	Increase.	Decrease.	Increase.	Decrease.	Increase.	Decrease.	Increase.	Decrease.	Increase.	Decrease.	Increase.	Decrease.	Increase.	Decrease.	Increase.	Decrease.
	Miles.	*Miles.*	*Dollars.*	*Dollars.*	*Miles.*	*Miles.*	*Dollars.*	*Dollars.*	*Miles.*	*Miles.*	*Dollars.*	*Dollars.*	*Miles.*	*Miles.*	*Dollars.*	*Dollars.*
Maine		22	2,021		32		700		69		9,512		67,438		12,233	
New Hampshire		102		1,452										13,540		1,452
Vermont		34		1,509					35		5,758			11,757	4,249	
Massachusetts		235		2,151						1	2,558			187,881	407	
Rhode Island		16		1,092							27			4,908		1,065
Connecticut		34		687					33		1,618		52,723		931	
New York		314		9,643		62		3,582	308		25,864		148,817		12,639	
New Jersey	8			299		27		1,620	64		39,305		60,066		37,386	
Pennsylvania		203		7,537	36		800		111		3,261		30,018			3,476
Delaware		3	27						1		25		584		52	
Maryland		93		2,493				2,400	40		965			28,401		3,928
West Virginia		5	10,453				1,775			167		13,985	171,627			1,757
Virginia	242		1,043			32		13,707	205		24,180		591,424		11,516	
North Carolina	496			2,307		3	2,744		244		31,877		347,597		32,314	
South Carolina	198		3,825			14	40			225		28,379		359,082		24,514
Georgia	82			3,516		18		450	42		9,727		44,129		5,761	
Florida		253		5,780	673		8,641			3		2,550	125,699		311	
Alabama		97		12,869		510		10,317	26			5,342	73,607			28,528
Mississippi	49		1,095		2			2,700	21			29,601	85,426			31,206
Louisiana	258			44,770		294		27,224				8,846		146,756		80,840
Texas	53			211,930		228	9,760			54		7,212		128,052		209,382
Arkansas		1,052		105,106	105			18,990	151		11,071			125,051		113,025
Missouri		13		1,775	125			14,750	134		1,719			94,264		14,806
Tennessee	356		2,038						16		4,009		40,338		6,047	
Kentucky	159		1,721			143		9,000	3		6,890			64,830		389
Ohio	51		4,865						116		6,862		287,259		11,727	
Indiana		39	28						64			529	43,614			501
Illinois		452		16,321					166		50,524			49,544	34,203	
Michigan	354			3,548		362	880		14		27,084		675,813		24,416	
Wisconsin		182		18,134		96		65	95		16,606			15,849		1,593
Iowa	347		1,880						208		58,032		203,534		59,912	
Minnesota	85			16,461						61	12,886		18,362			3,575
Nebraska	282		3,576						2		26,762		11,157		30,338	
Kansas	1,115		14,299						184		13,986		322,358		28,285	

Nevada									91		5,716		6,917		4,275	
California		180		1,444					229		16,029			53,458	2,750	
Oregon	28			15,079			1,800		1		28			8,556	2,866	
Washington Territory		176	9,838										1,592		1,737	
Idaho Territory	195		1,737			89							46,592		8,500	
Montana Territory	244		8,500										43,888		6,037	
Dakota Territory	315		6,037										38,064		3,290	
Wyoming Territory	118		3,290										7,424		1,384	
Utah Territory	68		1,384										3,130		7,392	
Colorado Territory		46	4,080						20		3,312					
Indian Territory		110		11,919					90		6,874			29,996		5,045
New Mexico Territory	681		16,772										171,548		16,772	
Arizona Territory	81		250										8,528		250	
	457		4,873										40,144		4,873	
Total	6,242	3,677	96,632	497,812	973	1,878	27,140	104,805	2,776	511	423,060	96,444	3,769,417	1,321,925	372,853	525,082
	3,677			96,632		973		27,140	511		96,444		1,321,925			372,853
Increase	2,565								2,265		326,616		2,447,492			
Decrease				401,180		905		77,665								152,229

THOMAS J. BRADY,
Second Assistant Postmaster-General.

E.—*Table showing the weight of the mails, the speed with which they are conveyed, the acc on railroad-routes in States in which the contract-term expired June* 30, 1876, *and also in oti pay in accordance with the act of March* 3, 1873; *and used also in accordance with the*

ABBREVIATIONS.—f. f., fixtures and furniture; f. f. c., fixtures and furniture complete; m. c., m line; d. l., double line; t. l., triple line; m., miles; r. a., route-agents; m. m., mail-messengers. the "Remarks" column refer to the order of the routes in this table.

Order.	State.	Number of route.	New number of route.	Termini.	Corporate title of company carrying the mail.	Length of route.	Miles per hour.
						Miles.	
1	Ohio..	9008	21007	Elyria, Millbury	Lake Shore and Michigan Southern.	74.98	32, 9
2	N. Y..	1201	.....	New York, Dunkirk	Erie	459	35
3	N. J..	2103	7004	New York, West Philadelphia.	Pennsylvania	90	28
4	Ohio..	9049	21045	Toledo, Elkhart	Lake Shore and Michigan Southern.	133.6	32, 9
5	N. Y..	1241	.....	Elkhart, Chicago	do	101	32, 9
6	N. Y..	1217	.....	Albany, Buffalo	New York Central and Hudson River.	298	45, 3
7	N. Y..	1211	.....	New York, Albany	do	144	45, 3
8	N. Y..	1211	.....	Albany, Troy	do	6	30
9	N. Y..	1241	.....	Buffalo, Elyria Millbury, Toledo	Lake Shore and Michigan Southern.	210.2 8.5	32, 9
10	N. Y..	1241	.....	Buffalo, Chicago	do	542	32, 9
11	N. Y..	1241	.....	Elyria, Millbury Toledo, Elkhart	do	79.3 143	32, 9
12	Pa....	2401	.....	Philadelphia, Pittsburgh	Pennsylvania	353.6	28

modations for mails and agents, the trips per week, and the rates of pay per mile per annum, States and Territories, the returns having been obtained with a view to the re-adjustment of the of July 12, 1876, in the case of re-adjustments taking effect on and after July 1, 1876.

catchers; r. p. o., railway post-office; apt., apartment; b. c., baggage-car; l., line or lines; a. l., single number followed by an asterisk (*) shows the equivalent in round trips. The figures in parentheses in

Whole weight carried any distance for thirty days.			Average weight carried whole distance.		Size, &c., of mail-car or apartment.	Trips per week.	Pay per mile per annum.	Remarks.	Order.
Outward.	Inward.	Total.	30 days, total.	Per day, total.					
Lbs.	*Lbs.*	*Lbs.*	*Lbs.*	*Lbs.*	*Feet and inches.*				
2177501	605, 064	2782565	2727772	45, 462	r. p. o., 45 by 9, (average,) ½ l.; 18 by 9, ½ l.; fast-mail, 4 l.—45 by 9, 45 by 9, 60 by 9, 60 by 9.	13	$755 00	60 days, from Dec. 1, 1875; average speed, 32 m. fast-mail; 28 m. residue.	1
651 545	403, 990	1058535	364, 911	6, 082	r. p. o, 50 by 10, f. f. c., d. l. to Hornellsville, 332 m.; s. l. residue, 127 m.; r. a. apt., 15.11 by 10.4, f. f., a. l. 67 m.; 12.8 by 6.8, f. f., a. l. 39 m.	17⅞*	705 00	60 days, from Dec. 1, 1875.	2
2157352	1078710	3236062	2977649	49, 627	r. p. o., 46 by 8.7, f. f. c., 3 l.; 58.6 by 8.5., f. f. c., 1 l.; tender, 29 by 7.9, f. f. c., 1 l; r. a. apt., (average,) 15.4 by 6.6, 1 l. through; r. a. apt. 8 by 6.4, 1 additional to Monmouth Junction, 42 m.	49¼*	628 00	Main route; branches $88, (146,) $55; 60 days, from Dec. 1, 1875.	3
1811574	528, 955	2340529	2228749	37, 145	r. p. o., 45 by 9, (average.) 1 l.; fast-mail, 4 l.—45 by 9, 45 by 9, 60 by 9, 60 by 9.	13	625 00	60 days, from Dec. 1, 1875; average speed, 32 m. fast-mail; 28 m. residue.	4
.....	.....	.....	2244739	37, 412	r. p. o., 36 by 9, 1 l.; 45 by 9, (average,) 1 l.; fast-mail, 4 l.—45 by 9, 45 by 9, 60 by 9, 60 by 9.	17½*	615 00	60 days, from Dec. 1, 1875; average speed, 32 m. fast-mail; 28 m. residue. Part; residue $590, $485, (9, 11)	5
3146567	1039950	4186517	3364475	56, 071	r.p.o., fast-mail, 4 l.—60 by 9, 60 by 9, 45 by 9, 45 by 9; and 1 l. 47 by 9, (average.)	34	602 00	60 days, from Dec. 1, 1875; average speed, 45 m. fast-mail; 30 m. residue.	6
2697830	799, 734	3497564	3159723	52, 662	r.p.o., fast-mail, 4 l.—60 by 9, 60 by 9, 45 by 9, 45 by 9; and 1 l. 47 by 9, (average.)	47*	597 00	60 days, from Dec. 1, 1875. Part; residue $597, (8.) Average speed, 45 m. fast-mail; 30 m. residue.	7
.....	.....	.....	108, 059	1, 801	.....	27	597 00	60 days, from Dec. 1, 1875. Part; residue $597, (7.)	8
.....	.....	.....	3066186	51, 102	r. p. o., 38 by 9, (average,) 1 l.; 45 by 9, (average,) 1 l.; fast-mail, 4 l.—45 by 9, 45 by 9, 60 by 9, 60 by 9, Buffalo to Cleveland, 184.5 m.; 38 by 9, (average,) 1 l.; 18 by 9, 1 l.; 45 by 9, (average,) 1 l.; fast-mail, 4 l.—45 by 9, 45 by 9, 60 by 9, 60 by 9, Cleveland to Elyria, 25.7 m., and Millbury to Toledo, 8.5 m.	17½*	590 00	60 days, from Dec. 1, 1875. Average speed, 32 m. fast-mail; 28 m. residue. Part; residue, $615, $485, (5, 11.) 34.2 m. at $615.	9
6739071	2213808	8953179	1709576	28, 492	See parts, (5, 9, 11)	17½*	553 17	60 days, from Dec. 1, 1875; average rate of pay 184.5 m. at $590; 135.2 m. at $615; 222.3 m. at $485.	10
.....	.....	.....	132, 950	2, 215	r. p. o., 38 by 9, (average,) 1 l.; 45 by 9, (average,) ½ l.; 18 by 9, ½ l., Elyria to Millbury, 79.3 m.; 38 by 9, 1 l.; 36 by 9, 1 l., Toledo to Elkhart, 143 m.	17½*	485 00	60 days, from Dec. 1, 1875; average speed, 32 m. fast-mail; 28 m. residue. Part; residue $615, $590, (5, 9.)	11
2020995	1189295	3210290	1802446	20, 027	r. p. o., 46.5 by 8.9, f. f. c., s. l.; r. a. apt., 10.11 by 8.7, f. f., a. l.	36	438 00	90 days, from Oct. 1, 1874.	12

E.—*Table showing the weight of the mails, the speed with which they*

Order.	State.	Number of route.	New number of route.	Termini.	Corporate title of company carrying the mail.	Length of route.	Miles per hour.
						Miles.	
13	Pa	2401	8001	Philadelphia, Pittsburgh	Pennsylvania	353.6	28
14	Md	3503	.....	Baltimore, Washington	Baltimore and Ohio	40	28
15	Md	3503	.....	do	do	40	28
16	Ohio	9032	21028	Cincinnati, Parkersburgh	Marietta and Cincinnati	195.15	30
17	N. Y.	1208	.....	Buffalo, Hornellsville	Erie	91	30
18	Md	3504	10003	Baltimore, Wheeling	Baltimore and Ohio	393	24
19	W.Va	12002	.....	Grafton, Parkersburgh	do	104.58	29
20	Md	3514	10013	Bay View Junction, n. o., (Baltimore,) Washington.	Baltimore and Potomac	46.1	26
21	Neb.	31001	.....	Omaha, Ogden City	Union Pacific	1,032.4	25
22	Ohio	9002	.....	Pittsburgh, Chicago	Pittsburgh, Fort Wayne and Chicago.	469.5	25
23	N. J	2101	7001	New York, Easton	Central, of New Jersey	74	27
24	Ind	22003	22003	Indianapolis, Cincinnati	Indianapolis, Cincinnati and La Fayette.	113.50	28
25	Ohio	9001	21001	Bellaire, Columbus	Central Ohio	137¾	.....
26	Ohio	9001	21001	Bellaire, Newark	do	104¾	25
27	Ohio	9001	21001	Newark, Columbus	do	33	25
28	Ind	22028	22029	La Fayette, Kankakee	Cincinnati, La Fayette and Chicago.	75.75	35
29	Ind	22005	22005	Indianapolis, La Fayette	Indianapolis, Cincinnati and La Fayette.	65.62	28
30	Ind	22010	22010	Cincinnati, East Saint Louis	Ohio and Mississippi	341	26.2
31	Ky	20005	20005	Louisville, Nashville	Louisville and Nashville	186.6	20.5
32	Tenn	19002	19002	Bristol, Chattanooga	East Tennessee, Virginia and Georgia.	242.7	20

are conveyed, the accommodations for mails and agents, &c.—Continued.

Whole weight carried any distance for thirty days.			Average weight carried whole distance.		Size, &c., of mail-car or apartment.	Trips per week.	Pay per mile per annum.	Remarks.	Order.
Outward.	Inward.	Total.	30 days, total.	Per day, total.					
Lbs.	*Lbs.*	*Lbs.*	*Lbs.*	*Lbs.*	*Feet and inches.*				
1649487	717, 765	2367252	1744696	29, 078	r. p. o., 58.6 by 8.5, f. f. c., 1 l.; 46 by 8.5, f. f. c., 1 l.; tender, 29 by 7.9, 1l.; r. a. apt., (average,) 11.6 by 8, f. f., s. l.	37¼*	$417 00	60 days, from Dec. 1, 1875.	13
.....	.....	.....	.....	26, 694	r. p. o., 52.4 by 9.6½, f. f., d. l.	54	375 00	Weight for 30 days, from Oct. 5, 1874, and 90 days on night-line r. p. o., from Dec. 1, 1875.	14
358, 930	125, 164	484, 084	460, 869	15, 362	r. p. o., 52.4 by 9.6½, f. f., s. l., from April 19, 1874.	48	375 00	In October, 1874	15
119, 155	155, 724	274, 879	212, 881	7, 096	r. p. o., 52.4 by 9, f. f., s. l.; apt., (no r. a.,) 14 by 9, s. l.	14	373 00	.....	16
96, 035	81, 741	177, 776	100, 230	1, 670	14 by 9.2, 12.6 by 9.10, f. f., s. l.	22½*	362 50	60 days, from Dec. 1, 1875.	17
640, 707	339, 697	980, 404	501, 623	8, 360	r. p. o., 52.4 by 9.7, f. f. c., d. l. to Grafton, 294 m.; s. l. residue, 99 m.; r. a. apt., 17 by 8.7½, Baltimore and Harper's Ferry, 96 m., and between Grafton and Wheeling, 99 m.	27¼*	360 00	60 days, from Dec. 1, 1875; 99 m. at $320.	18
283, 659	150, 210	433, 869	390, 372	6, 506	r. p. o., 52.4 by 9.7, f. f. c., s. l.	19	330 00	60 days, from Dec. 1, 1875.	19
1023553	682, 498	1706051	1687852	18, 754	r. p. o., 46.10 by 9, f. f., d. l.; r. a. apt., 14.9 by —, f. f., s. l.	29*	327 00	90 days, from Oct. 1, 1875; 3.5 m. increase.	20
392, 733	131, 897	524, 630	460, 466	15, 348	r. p. o., (say) 50 by 9.9, f. f. c., s. l.	7	315 00	r. p. o., with platforms, 54.5 by 9.9. In February, 1876.	21
322, 543	237, 988	560, 531	172, 663	5, 755	24.3 by 8.11¼, 21 by 8.9, f. f., d. l. to Homewood, 35 m.; s. l. residue, 434½ m.	22¾*	300 00	In August, 1875. Additional fast-mail from Sept. 12, 1875, 7 times per week.	22
82, 478	49, 845	132, 323	78, 414	2, 613	14 by 7, d. l	49*	300 00	.....	23
75, 546	156, 155	231, 701	192, 463	6, 415	r. p. o., 50 by 9.5, f. f. c., s. l.; r. a. apt, 12 by 7.6, f. f. c., s. l.	18	268 00	.....	24
251, 473	181, 236	432, 709	.....	.....	.....	....	267 00	60 days, from Dec. 1, 1875. See parts, (26, 27.)	25
.....	.....	.....	346, 776	5, 779	r. p. o., 50 by 8, f. f., s. l	20	267 00	60 days, from Dec. 1, 1875. Part; residue $267, (27.) See whole route, (25.)	26
.....	.....	.....	63, 670	1, 061	In b. c.; no r. a	20	267 00	60 days, from Dec. 1, 1875. Part; residue $267, (26.) See whole route, (25.)	27
127, 261	98, 811	226, 072	216, 199	7, 206	r. p. o., 50 by —, f. f. c., s. l.; r. a. apt., 12 by 7, f. f. c., s. l.	13	262 00	.....	28
117, 619	82, 315	199, 934	188, 469	6, 282	r. p. o., 50 by 9.5, f. f. c., s. l.; r. a. apt., 12 by 7.6, f. f., s. l.	22*	262 00	.....	29
187, 416	108, 191	295, 607	170, 095	5, 669	r. p. o., 50 by 10, 50 by 10, 50 by 10, 45 by 10, 41 by 10, f. f., s. l.	13⅔*	254 00	72.40 m. at $279	30
331, 301	124, 348	455, 649	250, 998	8, 366	r. p. o., 45 by 9.7, f. f., s. l.—to Bowling Green, 113.5 m.; r. a. apt., 14.9 by 9.7, f. f., 1½ l. to Bowling Green, 113.5 m., and 2½ l. residue, 73.1 m. Additional r. a. apt., 14 by 7.4, f. f., s. l. to Lebanon Junction, 30 m.	18⅔*	247 50	Average speed. 73.1 m. at $217.50.	31
101, 685	68, 703	170, 388	120, 713	4, 023	r. p. o., 39.7 by 8.9½, f. f. c., s. l.	14	244 00	Main route; branch $100, (120.)	32

E.—*Table showing the weight of the mails, the speed with which the*

Order.	State.	Number of route.	New number of route.	Termini.	Corporate title of company carrying the mail.	Length of route.	Miles per hour.
						Miles.	
33	Ohio..	9046	21042	Cleveland, Cincinnati	Cleveland, Columbus, Cincinnati and Indianapolis.	245.25	36
34	Ohio..	9051	21047	Chicago, O., Chicago, Ill	Baltimore and Ohio, (operating Baltimore, Pittsburgh and Chicago Railroad.)	271.53	35
35	Cal ...	46001	.....	San Francisco, Ogden	Central Pacific.....	880.96	21
36	Ohio..	9036	21032	Columbus, Pittsburgh.....	Pittsburgh, Cincinnati and Saint Louis.	193	31
37	Mo ...	28011	.....	Sedalia, Denison	Missouri, Kansas and Texas ..	447	22
38	Ohio..	9002	21002	Pittsburgh, Homewood	Pittsburgh, Fort Wayne and Chicago.	30.7	.....
39	Mo ...	28014	.....	Hannibal, Sedalia	Missouri, Kansas and Texas ..	142.88	20
40	Va....	4409	11008	Richmond, Petersburgh.....	Richmond and Petersburgh...	24.07	27
41	Ohio..	9031	21027	Cincinnati, Xenia	Pittsburgh, Cincinnati and Saint Louis, (Little Miami division.)	65.96	28
42	Ohio..	9016	21014	Columbus, Xenia	Columbus and Xenia	55	28
43	Ohio..	9002	.....	Pittsburgh, Chicago.....	Pittsburgh, Fort Wayne and Chicago.	469.5	27
44	Ohio..	9002	21002	.....do	.....do	469.5	27
45	Ind ...	22002	22002	Indianapolis, Terre Haute ..	Terre Haute and Indianapolis.	73	30
46	Tenn .	19004	19004	Stevenson, Chattanooga.....	Nashville and Chattanooga ...	39	25
47	Ga....	15002	15002	Atlanta, Chattanooga	Western and Atlantic	138.47	23
48	Tenn	19004	19004	Stevenson, Chattanooga.....	Nashville and Chattanooga ...	39	.....
49	Ill	23031	.....	East Saint Louis, Terre Haute.	Terre Haute and Indianapolis	165.40	30
50	Va....	4410	11009	Petersburgh, Weldon.....	Petersburgh.....	65.51	20
51	Ohio..	9051	21047	Chicago, O., Chicago, Ill....	Baltimore and Ohio, (operating Baltimore, Pittsburgh and Chicago Railroad.)	271.53	35
52	Ky ...	20004	20004	Cincinnati, Louisville.....	Louisville, Cincinnati and Lexington.	110¾	27.5
53	Ill	23010	.....	Camp Point, Quincy	Chicago, Burlington and Quincy.	22	25
54	Ill	23010	.....	Galesburgh, Camp Point....	.....do	78	25
55	Ohio..	9030	21026	Cincinnati, Dayton	Cincinnati, Hamilton and Dayton.	60.45	.....

are conveyed, the accommodations for mails and agents, &c.—Continued.

Whole weight carried any distance for thirty days.			Average weight carried whole distance.		Size, &c., of mail-car or apartment.	Trips per week.	Pay per mile per annum.	Remarks.	Order.
Outward.	Inward.	Total.	30 days, total.	Per day, total.					
Lbs.	*Lbs.*	*Lbs.*	*Lbs.*	*Lbs.*	*Feet and inches.*				
260, 586	173, 891	434, 489	232, 454	7, 748	r. p. o., 39.2 by 9.2, f. f., d. l. to Galion, 80 m.; a. l. residue, 165.25 m.	19	$237 00	80 m. at $262.....	33
201, 945	142, 326	344, 269	283, 048	4, 717	r. p. o., 50 by 8, f. f., a. l.; r. a. apt., 20 by 8, f. f., a. l.	14	235 00	60 days, from Dec. 10, 1875.	34
172, 607	314, 886	487, 493	343, 018	11, 434	r. p. o., 55.1⅔ by 8.9, f. f. c., a. l.	7½*	233 00	In February & March, 1876. 3.46 m. increase.	35
886, 992	230, 116	1117110	985, 222	16, 420	r. p. o., 50.5 by 9.2, f. f., a. l..	20	230 00	60 days, from Dec. 1, 1875. Main route; branch $50, (306.)	36
93, 205	39, 436	132, 641	84, 297	2, 809	r. p. o., (say) 51.2 by 9.10, f. f., a. l.	7	223 00	In July, 1875; r. p. o., "over all," 57.7.	37
87, 683	39, 525	127, 208	127, 208	2, 120	.....	....	219 00	Part; residue $209, (44.) Weight carried for 60 days, from Dec. 1, 1875, by Erie and Pittsburgh trains.	38
60, 249	23, 809	84, 058	64, 057	2, 135	r. p. o., (say) 51.2 by 9.10, f. f., a. l.	7	215 00	In July, 1875; r. p. o., "over all," 57.7.	39
182, 685	55, 745	238, 430	235, 665	3, 927	r. p. o., 42 by —, f. f c., d. l.	13	213 00	60 days, half from June 1, 1875, and residue from Jan. 24, 1876. $150 m. m.	40
174, 323	415, 390	589, 713	551, 446	9, 190	r. p. o., 50.5 by 9.2, f. f., a. l.; r. a. apt., 19.7 by 8.6, f. f., a. l.	20	210 00	60 days, from Dec. 1, 1875. Part; residue $50, (354.)	41
411, 540	143, 133	554, 673	545, 819	9, 096	r. p. o., 50.5 by 9.2, f. f., a. l.; r. a. apt., 19.7 by 8.6, f. f., a. l.	13	210 00	60 days, from Dec. 1, 1875.	42
1048534	898, 855	1947389	626, 579	6, 961	24.3 by 11¼, 21 by 8.9, f. f., d. l. to Homewood, 35 m.; s. l. residue.	25⅔*	209 00	90 days, from Oct. 1, 1874. 35 m. at $219.	43
659, 414	315, 384	974, 798	277, 141	4, 619	24.3 by 11¼, 21 by 8.9, f. f, d. l. to Homewood, 35 m.; s. l. residue.	29⅔*	209 00	60 days, from Dec. 1, 1875. 35 m. at $219, (38.)	44
398, 914	194, 784	583, 698	544, 150	9, 069	r. p. o., 50.6 by 9.3, f. f. c., s. l.; r. a. apt., 19.7 by 7.7, f. f., d. l.	22*	208 00	60 days, from Dec. 1, 1875.	45
.....	.....	.....	123, 202	4, 106	12.6 by 8.8, f. f., d. l.....	19	205 00	Part; residue $145, (91.) With lap service. See whole route, (90.)	46
80, 074	114, 938	195, 012	143, 383	2, 811	r. p. o., 40 by 9, f. f., s. l.; r. a. apt., 13.4 by 8.4, f. f., s. l.	14	205 00	51 days, 21 from Mar. 15, and 30 from May 15, 1876.	47
16, 981	32, 086	49, 067	49, 067	1, 635	.....	...	205 00	Lap service performed by Memphis and Charleston Railroad Company; paid for to Nashville and Chattanooga Railroad Company.	48
176, 233	354, 839	531, 072	453, 629	7, 560	r. p. o., 50.6 by 9.9, f. f. c. and m. c., s. l.; r. a. apt., 19 by 7, f. f., s. l.	19	204 00	60 days, from Dec. 1, 1875.	49
161, 831	48, 955	210, 786	200, 493	3, 342	r. p. o., 42.4 by 8.10, f. f. c., d. l.	13	204 00	60 days, half from June 1, 1875, and residue from Jan. 24, 1876.	50
61, 241	42, 030	103, 271	84, 038	2, 801	r. p. o., 50 by 8, f. f., s. l.; r. a. apt., 20 by 8., f. f., s. l.	14	203 00	In June, 1875	51
214, 523	84, 409	298, 932	250, 885	8, 362	9.6 by 8, f. f., a. l., and b. c	18	200 00	.....	52
.....	.....	.....	236, 840	7, 894	r. p. o., 44.11 by 9.6, f. f. c. and m. c., s. l.; r. p. o. lap, 50.8 by —, f. f., s. l.	12	190 00	Part, lap. See residue, (54.)	53
.....	.....	.....	95, 174	3, 172	r. p. o., 44.11 by 9.6, f. f. c. and m. c., s. l.	12	190 00	Part; see residue, (53).	54
81, 874	45, 876	127, 750	.....	.....	.....	...	187 50	33.92 m at $150. See parts, (56, 83.)	55

E.—*Table showing the weight of the mails, the speed with which the*

Order.	State.	Number of route.	New number of route.	Termini.	Corporate title of company carrying the mail.	Length of route.	Miles per hour.
						Miles.	
56	Ohio..	9030	21026	Cincinnati, Hamilton	Cincinnati, Hamilton and Dayton.	26.53	26
57	Ky ...	20008	20008	Bowling Green, Guthrie	Louisville and Nashville.....	51	24
58	Ohio..	9018	21016	Galion, Indianapolis	Cleveland, Columbus, Cincinnati and Indianapolis.	204	31
59	Ill	23028	.....	Terre Haute, East Saint Louis.	Indianapolis and Saint Louis .	189	30
60	Tenn .	19009	19009	Guthrie, Paris	Louisville and Nashville.....	82.5	24
61	Ky ...	20018	20018	Cincinnati Junction, Louisville and Nashville Junction.	Louisville, Cincinnati and Lexington.	4.13	12
62	Miss..	18001	18001	Canton, Cairo	New Orleans, Saint Louis and Chicago.	342.98	20
63	Ill	23028	.....	Terre Haute, East Saint Louis.	Indianapolis and Saint Louis	189	29
64	Tenn .	19010	19010	Milan, Paris	Louisville and Nashville.....	43.5	25
65	Ind ...	22018	22019	Jeffersonville, North Vernon	Ohio and Mississippi	53.50	24.5
66	N. C ..	13002	13002	Weldon, Wilmington	Wilmington and Weldon.....	163.07	24
67	Ohio..	9017	21015	Columbus, Indianapolis	Columbus, Chicago and Indiana Central.	188	31
68	N. C ..	13004	13004	Greensborough, Charlotte...	Richmond and Danville.....	93	21½
69	Ala...	17005	17005	Memphis, Stevenson	Memphis and Charleston.....	271.5	23
70	Ohio..	9020	21018	Portsmouth, Reed's Mills ...	Marietta and Cincinnati	56	25
71	S. C...	14002	14002	Columbia, Wilmington.....	Wilmington, Columbia and Augusta.	191.78	.....
72	S. C...	14002	14002	Florence, Wilmington	.....do	109.70	.....
73	Tex...	31003	.....	Houston, Denison City.....	Houston and Texas Central...	337.55	20
74	Ohio..	9011	21010	Sandusky, Newark	Baltimore and Ohio, (lessees Sandusky, Mansfield and Newark.)	116	.....
75	Ohio..	9011	21010	Chicago, O., Newark	.....do	88	30
76	Ohio..	9011	21010	Sandusky, Newark	.....do	116	.....
77	Ohio..	9007	21006	Cleveland, Wellsville	Cleveland and Pittsburgh.....	102.36	30
78	Ohio..	9011	21010	Chicago, O., Newark	Baltimore and Ohio, (lessees Sandusky, Mansfield and Newark.)	88	30
79	Ohio..	9011	21010	Sandusky, Chicago, O	.....do	28	30
80	Ohio..	9011	21010	.....do	.....do	28	30
81	N. Y..	1222	.....	Troy, Saratoga Springs	Delaware and Hudson Canal Company.	32.81	30
82	Ala...	17012	17012	Mobile, Montgomery	Mobile and Montgomery.....	179	24
83	Ohio..	9030	21026	Hamilton, Dayton	Cincinnati, Hamilton and Dayton.	33.92	26
84	N. Y..	1221	.....	Eagle Bridge, Rutland	Delaware and Hudson Canal Company.	62.5	30
85	Ohio..	9027	21023	Dayton, Toledo	Dayton and Michigan.....	142.96	23
86	N. Y..	1220	.....	Saratoga Springs, Castleton.	Delaware and Hudson Canal Company.	54	30
87	N. Y..	1255	.....	Canandaigua, Elmira	Northern Central.....	68.5	23
88	N. Y..	1224	.....	Troy, Albany Junction	Delaware and Hudson Canal Company.	6	30
89	Ga....	15004	15004	Augusta, Atlanta	Georgia	171.62	25

are conveyed, the accommodations for mails and agents, &c.—Continued.

Whole weight carried any distance for thirty days.			Average weight carried whole distance.		Size, &c., of mail-car or apartment.	Trips per week.	Pay per mile per annum.	Remarks.	Order.
Outward.	Inward.	Total.	30 days, total.	Per day, total.					
Lbs.	*Lbs.*	*Lbs.*	*Lbs.*	*Lbs.*	*Feet and inches.*				
.....	.....	.....	118, 836	3, 961	19 by 7.3, 8 by 6.8, f. f., d. l.	59⅝*	$187 50	Part; residue $150, (83.)	56
131, 814	37, 012	168, 826	162, 311	5, 410	r. p. o., 45 by 9.5, f. f., s. l.; apt. in b. c., (no r. a.,) 14.9 by 9.7, f. f., s. l.	13	186 00	.....	57
100, 382	61, 801	162, 183	114, 901	3, 830	r. p. o., 39.2 by 9.2, f. f. c., s. l.	15⅝*	185 00	.....	58
55, 112	55, 601	110, 703	66, 695	2, 223	r. p. o., 40 by 9.8, f. f. c., s. l.	18	185 00	In April, 1875.....	59
125, 601	33, 397	158, 998	150, 924	5, 030	r. p. o., 45 by 9.5, f. f., s. l.; apt. in b. c., (no r. a.,) 14.9 by 9.7, f. f., s. l.	13	183 00	.....	60
22, 642	119, 126	141, 768	141, 768	4, 725	In charge of conductor...	12	182 00	.....	61
57, 126	118, 725	175, 851	84, 851	2, 819	r. p. o., (average,) 34.9 by 9.7, f. f., s. l.	7	180 00	.....	62
49, 040	50, 011	99, 051	58, 579	1, 952	r. p. o., 40 by 9.2, f. f. c., s. l.	18	178 00	In Mar., 1876. Weighing voluntary.	63
35, 191	121, 533	156, 724	149, 075	4, 969	r. p. o., 45 by 9.5, f. f., s. l...	17¼*	175 00	Part; residue $145, (93.)	64
17, 284	38, 150	55, 434	49, 848	1, 661	13 by 8.7, f. f., s. l.....	13	175 00	.....	65
101, 604	36, 779	138, 383	110, 992	3, 699	21.8 by 8.7, f. f., s. l.....	13	172 00	Main route; branch $50, (308.) 0.07 m. increase.	66
348, 669	163, 680	512, 349	426, 975	7, 116	r. p. o., 50.5 by 9.2, f. f., s. l	20	166 00	60 days, from Dec. 1, 1875.	67
58, 534	29, 531	88, 065	72, 990	2, 433	18 by 9, f. f., s. l	7	164 00	Part; residue $75,(173)	68
38, 350	45, 595	83, 945	36, 211	1, 207	24 by 9, f. f., s. l	14	160 00	Main route; branches $50, $30, (359, 435.)	69
10, 819	26, 348	37, 167	25, 429	847	14.6 by 9.6, f. f., s. l	12	158 00	.....	70
26, 866	79, 803	106, 669	.....	.....	....	....	155 00	82.08 m. at $100. See parts, (72, 134.)	71
.....	.....	.....	93, 193	3, 106	22.7 by 8.9, f. f., s. l	13	155 00	Part; residue $100, (134.)	72
51, 467	84, 970	136, 437	62, 692	2, 089	14 by 7.3, f. f., s. l.....	6	153 00	In March, 1875.....	73
158, 276	241, 424	399, 700	.....	.....	....	....	152 00	60 days, from Dec. 15, 1875. See parts, (75, 80.)	74
.....	.....	.....	327, 781	5, 463	r. p. o., 50 by 8, f. f., s. l.....	20	152 00	Part; residue $152, (80.) 60 days, from Dec. 15, 1875. See whole route, (74.)	75
44, 277	71, 143	115, 420	.....	.....	....	....	152 00	In June, 1875. See parts, (78, 79.)	76
64, 282	65, 331	129, 613	80, 897	2, 696	13 by 9, f. f., s. l	15½*	152 00	.....	77
.....	.....	.....	69, 641	2, 321	r. p. o., 50 by 8, f. f., s. l	20	152 00	In June, 1875. Part; residue $152, (79.) See whole route,(76.)	78
.....	.....	.....	25, 809	860	16.6 by 6.8, f. f., s. l	18*	152 00	In June, 1875. Part; residue $152, (78.) See whole route,(76.)	79
.....	.....	.....	30, 828	513	16.6 by 6.8, f. f., s. l	18*	152 00	Part; residue $152, (75.) 60 days, from Dec. 15, 1875. See whole route, (74.)	80
144, 355	68, 338	212, 693	168, 980	2, 816	21.9 by 7, f. f., s. l.....	21½*	150 00	60 days, in May and August, 1875.	81
36, 261	54, 264	90, 525	77, 951	2, 598	18 by 9, f. f., s. l	14	150 00	.....	82
.....	.....	.....	71, 751	2, 391	19 by 7.3, 8 by 6.8, f. f., s. l	27*	150 00	Part; residue $187.50, (56.)	83
124, 029	78, 207	202, 236	134, 035	2, 233	21.9 by 7, f. f., s. l. to Castleton, 51 m.; d. l. residue, 11¼ m.	20⅝*	150 00	60 days, in May and August, 1875.	84
54, 946	36, 897	91, 843	52, 311	1, 743	8 by 6.8, 9 by 7.3, f. f., s. l..	16⅜*	150 00	.....	85
103, 592	48, 096	151, 688	98, 670	1, 644	21.9 by 7, f. f., s. l	16¼*	150 00	60 days, in May and August, 1875.	86
24, 927	36, 380	61, 307	39, 965	1, 332	15 by 8 4, (average,) 1½ l..	18½*	150 00	In November, 1875 ...	87
11, 189	7, 077	18, 266	16, 424	547	no r. a	24	150 00	Branch; main route $107, (116.)	88
41, 459	38, 916	80, 375	55, 660	1, 855	r. p. o., 25.4 by 8.8, f. f., s. l.	12	147 00	30 days, from May 15, 1876.	89

E.—*Table showing the weight of the mails, the speed with which they*

Order.	State.	Number of route.	New number of route.	Termini.	Corporate title of company carrying the mail.	Length of route.	Miles per hour.
						Miles.	
90	Tenn.	19004	19004	Nashville, Chattanooga	Nashville and Chattanooga	153	.....
91	Tenn	19004	19004	Nashville, Stevenson	do	114	25
92	Tenn.	19004	19004	Nashville, Chattanooga	do	153	25
93	Tenn.	19010	19010	Memphis, Milan	Louisville and Nashville	89	25
94	Ind.	22007	22007	New Albany, Indianapolis	Jeffersonville, Madison and Indianapolis.	114	27
95	N. Y.	1224	.....	Whitehall, Castleton	Delaware and Hudson Canal Company.	16	30
96	Ala.	17013	17013	Mobile, New Orleans	New Orleans, Mobile and Texas.	140	26
97	Va.	4407	13004	Danville, Greensborough	Richmond and Danville	48.3	.....
98	Ga.	15003	15003	Atlanta, West Point	Atlanta and West Point	86.68	22
99	Vt.	410	.....	Lunenburgh Junction, Johnson.	Portland and Ogdensburgh	78.81	20
100	Ga.	6001	15004	Augusta, Atlanta	Georgia	171.62	25
101	N. C.	13007	13007	Charlotte, Augusta	Charlotte, Columbia and Augusta.	195.75	20
102	S. C.	5607	14005	Charleston, Florence	Northeastern	103	19
103	Miss.	7004	18004	Mobile, Columbus	Mobile and Ohio	472.7	24
104	Ga.	15009	15009	Savannah, Live Oak	Atlantic and Gulf	179.20	20
105	Ohio	9015	21013	Columbus, Delaware	Cleveland, Columbus, Cincinnati and Indianapolis.	24.75	30
106	Ohio	9029	21025	Hamilton, Richmond	Cincinnati, Richmond and Chicago.	45.1	25
107	Ohio	9005	21004	Hudson, Columbus	Cleveland, Mount Vernon and Delaware.	145.88	.....
108	S. C.	14005	14005	Charleston, Florence	Northeastern	103	19
109	Tenn.	19008	19008	Nashville, Guthrie	Saint Louis and Southeastern	48	23
110	S. C.	14004	14004	Charleston, Savannah	Savannah and Charleston	107.63	17
111	Ga.	15012	15012	Macon, Atlanta	Central Railroad and Banking Company.	103.52	20
112	Ill.	23032	.....	Saint Louis, Evansville	Saint Louis and Southeastern	164.75	23
113	Ky.	20002	20002	Covington, Nicholasville	Kentucky Central	112	.....
114	Ky.	20002	20002	Covington, Lexington	do	99	22
115	Ky.	20010	20010	Evansville, Guthrie	Saint Louis and Southeastern	110.66	23
116	N. Y.	1224	.....	Albany, Canada Line	Delaware and Hudson Canal Company.	189.93	30
117	Ala.	17001	17001	Montgomery, West Point	Western, of Alabama	88.5	23
118	Md.	3514	.....	Baltimore, Washington	Baltimore and Potomac	42.6	26
119	Md.	3514	.....	do	do	42.6	.....
120	Tenn.	19002	19002	Cleveland, Dalton	East Tennessee, Virginia and Georgia.	28.5	20
121	Ohio	9003	21003	Pittsburgh, Bellaire	Cleveland and Pittsburgh	94.5	30

are conveyed, the accommodations for mails and agents, &c.—Continued.

Whole weight carried any distance for thirty days.			Average weight carried whole distance.		Size, &c., of mail-car or apartment.	Trips per week.	Pay per mile per annum.	Remarks.	Order.
Outward.	Inward.	Total.	30 days, total.	Per day, total.					
Lbs.	*Lbs.*	*Lbs.*	*Lbs.*	*Lbs.*	*Feet and inches.*				
[illegible],742	67,826	156,568	.....	.....	.....	....	$145 00	39 m. at $205. With lap service. See parts, (46, 91.)	90
.....	.....	.....	79,546	2,651	12.6 by 8.8, f. f., s. l	15¾*	145 00	Part; residue $205, (46.) See whole route, (90.)	91
71,761	35,740	107,501	76,033	2,534	12.6 by 8 8, f. f., s. l	15⅛*	145 00	39 m. at $205. Without lap service.	92
24,934	62,838	87,772	72,481	2,416	15 by 8, f. f., s. l	20	145 00	Part; residue $175, (64.)	93
34,131	48,404	82,535	58,443	1,948	13 by 7, f. f., s. l	19	134 00	.....	94
35,005	4,680	39,685	37,674	1,255	r. a. in b. c., s. l	6	132 00	Branch; main route $107, (116.)	95
39,565	33,812	73,377	64,468	2,148	17.6 by 7.3, f. f., s. l	14	130 00	.....	96
56,976	23,776	80,752	77,488	2,582	.....	....	125 00	Part of route 13004. Weighing voluntary.	97
48,360	31,664	80,024	72,132	2,404	17 by 8.3, f. f., s. l	14	125 00	In Jan., 1876. 0.39 m. increase.	98
47,778	43,740	91,518	67,964	2,265	20 by 6.6, 15 by 6.6, f. f., s. l	6½*	125 00	In March, 1876	99
41,387	41,269	82,656	58,292	1,943	24.6 by 8.6, f. f., s. l	13	125 00	In Oct., 1875. .04 m. decrease.	100
45,900	24,988	70,888	40,899	1,363	19 by 8, fixtures, s. l	10⅞*	125 00	1.25 m. decrease	101
12,305	32,541	44,846	39,784	1,326	11 by 8.4, f. f., s. l	13	125 00	In October, 1875. 1 m. decrease.	102
38,540	49,041	87,581	19,785	659	22 by 9, f. f., s. l	7	125 00	In Oct., 1875. Main route; branch $60, (208.)	103
47,265	20,430	67,695	51,056	1,701	16.8 by 9.3, f. f., s. l	13	120 00	Main route; branch $58, (217.) 1.27 m. decrease.	104
19,487	26,942	46,429	43,606	1,453	11 by 9.2, f. f., s. l	6	120 00	.....	105
21,182	10,297	31,479	26,616	887	12 by 9, f. f., s. l	12	118 00	.....	106
27,150	28,029	55,179	21,621	720	.....	....	117 00	.....	107
23,104	53,700	76,804	70,983	2,366	12 by 9, f. f., s. l	13	116 00	.....	108
14,747	7,127	21,874	17,697	589	11.6 by 7.6, f. f., s. l	13	112 00	.....	109
45,422	19,649	65,071	54,022	1,800	9 by 9, f. f., s. l	13	111 00	3.63 m. increase	110
22,752	26,481	49,233	37,360	957	17.7 by 6.7., f. f., s. l	13	110 00	39 days, 9 from March 15 and 30 from May 15, 1876.	111
22,798	18,770	41,568	20,832	694	12 by 6.6, f. f., s. l	12	110 00	Main route; branch $50, (362.) In March, 1875; reported Oct., 1875.	112
41,559	22,057	63,616	.....	.....	.....	....	109 00	13 m. at $75. See parts, (114, 175.)	113
.....	.....	.....	42,794	1,426	12 by 6.6, fixtures, s. l	12	109 00	Part; residue $75, (175.) See whole route, (113.)	114
12,774	18,826	31,600	15,347	511	11.6 by 7.6, f. f., s. l	13	108 00	.....	115
109,045	48,515	157,560	63,714	2,123	21.6 by 6.9, f. f., s. l	17⅛*	107 00	Main route; branches $150, $132, (88, 95.)	116
33,252	46,908	80,160	66,140	2,204	18 by 8.6, f. f., s. l	14	105 00	In January, 1876	117
.....	.....	.....	.....	12,772	r. p. o., 46.10 by 9, f. f., s. l.; r. a. apt., 14.6 by 8.6, f. f., s. l.	13	100 00	Daily average of returns for Oct, 1873, and night r. p. o. l. for 90 days from October 1, 1875.	118
476,312	543,617	1019929	1019929	11,332	r. p. o., 46.10 by 9, f. f., s. l	6	100 00	90 days, from October 1, 1875, on night r. p. o. l.	119
40,370	21,150	61,820	60,529	2,017	22 by 8.4, f. f., s. l	14	100 00	Branch; main route $244, (32.)	120
130,665	69,170	199,835	51,510	1,717	13 by 9, f. f., s. l	18	100 00	25.75 m. increase by extension to commence at Pittsburgh instead of Rochester.	121

E.—*Table showing the weight of the mails, the speed with which*

Order.	State.	Number of route.	New number of route.	Termini.	Corporate title of company carrying the mail.	Length of route.
						Miles.
122	N. J ..	2106	7013	New York, Washington	Morris and Essex	73
123	Ohio ..	9006	21005	Cleveland, Sharpsville	Atlantic and Great Western ..	84.40
124	Ga....	6008	15009	Savannah, Live Oak.	Atlantic and Gulf.....	180.47
125	N. J ..	2106	7013	New York, Easton	Morris and Essex.....	87.40
126	Ga ...	6011	15012	Macon, Atlanta	Macon and Western	103.52
127	Ind ...	22012	22012	Evansville, Terre Haute	Evansville and Crawfordsville	110
128	Mo ...	28030	.....	Saint Joseph, Atchison.....	Hannibal and Saint Joseph ...	22.08
129	Ohio ..	9006	21005	Cleveland, Leavittsburgh ...	Atlantic and Great Western ..	49.75
130	Tex...	31004	.....	Hempstead, Austin	Houston and Texas Central..	118.7
131	Ga....	15001	15001	Atlanta, Charlotte	Atlanta and Richmond Air Line.	266.50
132	N. Y ..	1245	.....	Albany, Binghamton.....	Delaware and Hudson Canal Company.	142
133	Miss..	18003	18003	Vicksburgh, Jackson	Vicksburgh and Meridian	45.5
134	S. C...	14002	14002	Columbia, Florence	Wilmington, Columbia and Augusta.	82.08
135	Wis ..	25014	.....	Elroy, Saint Paul	West Wisconsin	198.4
136	Ohio ..	9013	21012	Springfield, Sandusky.....	Cincinnati, Sandusky and Cleveland.	131.35
137	N. J ..	2111	7019	Glassborough, Millville	West Jersey.....	22
138	Ind ...	22004	22004	Indianapolis, Peru	Indianapolis, Peru & Chicago.	78
139	Ala ...	6610	17010	Selma, Dalton	Selma, Rome and Dalton.....	237.5
140	Ga....	15011	15011	Macon, Columbus.....	Southwestern.....	100.94
141	Ill	11913	23036	Aurora, Foreston	Chicago and Iowa.....	81.64
142	Ohio ..	9012	21011	Xenia, Dayton.....	Pittsburgh, Cincinnati and Saint Louis.	17
143	Ky ...	20003	20003	La Grange, Lexington	Louisville, Cincinnati and Lexington.	67
144	Ohio ..	9038	21034	Salamanca, Dayton	Atlantic and Great Western ..	389.55
145	Ohio ..	9022	.....	Bluffs, Naples.....	Toledo, Wabash and Western	4
146	Fla ...	16002	16002	Jacksonville, Chattahoochee River.	Jacksonville, Pensacola and Mobile.	213.52
147	Me ...	244	.....	Bangor, Bucksport.....	Consolidated European and North American Railway.	19.35
148	Tenn .	19006	19006	Nashville, Decatur.....	Louisville and Nashville.....	122½
149	N. J ..	2103	7004	Frankfort Junction, Kensington Station.	Pennsylvania	2.95
150	Ohio ..	9013	21012	Springfield, Sandusky.....	Cincinnati, Sandusky and Cleveland.	131.35
151	Ohio ..	9040	21036	Columbus, Athens	Columbus & Hocking Valley.	77.40
152	Mich .	24035	.....	Toledo, Detroit	Toledo, Canada Southern and Detroit.	56.37
153	N. Y ..	1224	.....	Albany, Albany Junction...	Delaware and Hudson Canal Company.	12
154	Ark ..	29005	.....	Argenta, Altus	Little Rock and Fort Smith...	120
155	Miss..	18004	18004	Mobile, Columbus	Mobile and Ohio	472.7

are conveyed, the accommodations for mails and agents, &c.—Continued.

Whole weight carried any distance for thirty days.			Average weight carried whole distance.		Size, &c., of mail-car or apartment.	Trips per week.	Pay per mile per annum.	Remarks.	Order.
Outward.	Inward.	Total.	30 days, total.	Per day, total.					
Lbs.	*Lbs.*	*Lbs.*	*Lbs.*	*Lbs.*	*Feet and inches.*				
.....	.....	.....	49, 101	1, 636	12 by 7.3, (63 m.,) 11.7 by 7.7, (73 m.,) 19.9 by 7.6, (29 m.,) f. f., d. l. to Dover, 44 m., t. l. thence to Hackettstown, 19 m., d. l. residue, 10 m.	13½*	$100 00	In July, 1874; reported Nov., 1875. 10 m. at $50. Part; residue $50, (263.)	122
29,331	17,915	47, 246	.....	.....	14. 4 by 7.10, f. f., s. l.	...	100 00	31.61 m. at $50; 3 04 m., at $68. See parts, (129, 252.)	123
81,533	43,767	125, 300	91, 180	1, 519	16.8 by 9.3, f. f., s. l	7	100 00	60 days, in Jan. and Oct., 1875. 0 28 m. decrease Main route; branch $50, (268.)	124
71,613	41, 907	113, 520	42, 650	1, 421	.....	....	100 00	24.40 m. at $50. See parts, (122, 263.)	125
17,[illegible]	28, 507	46, 487	37, 076	1, 235	11.7 by 6 7, f. f., s. l	13	100 00	In November, 1875	126
21,[illegible]	37, 331	58, 716	35, 661	1, 188	12.6 by 8, f. f., s. l	12	100 00	.....	127
24,[illegible]	8,561	33, 477	33, 477	1, 115	13 by 7, f. f., s. l	13	100 00	In May and June, 1876	128
.....	.....	.....	33, 241	1, 108	14.4 by 7.10, f. f., s. l	24	100 00	Part; residue $50, $68, (123, 252.) See whole route, (123.)	129
28,973	14, 092	43, 065	32, 840	1, 094	14 by 7.3, f. f., s. l	6	100 00	In March, 1875	130
24,951	28, 173	53, 124	31, 374	1, 045	19.11 by 8.11½, f. f., s. l	7	100 00	.....	131
86,076	64, 116	150, 192	61, 977	1, 032	17.4 by 9.10, f. f., s. l	16⅔*	100 00	60 days, in May and August, 1875.	132
.....	.....	.....	30, 664	1, 022	12 by 7.2, f. f., s. l	7	100 00	Part; residue $59, (209)	133
.....	.....	.....	26, 095	869	22.7 by 8.9, f. f., s. l	7	100 00	Part; residue $155, (72)	134
30,380	20, 516	50, 896	23, 064	768	40 by 9, f. f., s. l	6	100 00	In Sept., 1875. Main route; branch $30.	135
28,643	24, 558	53, 201	22, 544	751	13.6 by 9, f. f., s. l. and m. c.	13	100 00	In April, 1875	136
15,671	10, 793	26, 464	21, 728	724	13 by 8.3, f. f., s. l	12	100 00	In March, 1876	137
19,244	16, 861	36, 105	20, 989	699	12 by 7.1, f. f., s. l	20½*	100 00	.....	138
16,563	23, 915	40, 478	16, 362	545	14 by 7.6, f. f., s. l	7	100 00	In October, 1875.	139
37,468	22, 249	59, 717	23, 275	517	12.8 by 6.3, f. f., s. l	6	100 00	45 days, 15 from Mar. 15 and 30 from May 15, 1876.	140
53,935	23, 884	77, 819	58, 371	972	38 by 9½, f. f. c., s. l	12	98 00	60 days, in March, 1875, and January, 1876.	141
5,362	6, 255	11, 617	11, 157	371	14 by 8.7, f. f., s. l	18	94 00	.....	142
30,604	19, 384	39, 988	24, 673	822	8.6 by 6.1, f. f., s. l	12	92 00	.....	143
[illegible],744	76, 598	165, 342	29, 085	969	14.4 by 7.10, f. f., s. l	16*	90 00	.....	144
15,300	6, 681	21, 881	21, 881	729	.....	....	90 00	In March, 1876, by Department.	145
47,080	66, 831	113, 911	36, 988	616	16 by 8, (82 m.,) 10 by 7, (133.75 m.,) f. f., s. l.	11½*	90 00	60 days, half from Nov. 15, 1875, and residue from Jan. 1, 1876. Main route; branch $30, (442.)	146
12,274	7, 971	20, 245	17, 390	582	9.6 by 7.6, f. f., d. l	12	89 00	In September, 1875 ..	147
65,794	19, 584	85, 378	50, 122	1, 670	14.9 by 9, f. f	9¾*	88 00	Average speed.....	148
11,850	46, 041	57, 891	57, 891	964	13 by 6.2½, s. l	18	88 00	60 days, from Dec. 1, 1875. Branch; main route $628, (3.)	149
24,187	23, 194	47, 381	18, 480	616	.....	....	87 50	.....	150
16,315	11, 194	27, 509	13, 157	438	16 by 8.6, f. f., s. l	12	87 50	Main route; branch $40 (415.)	151
14,204	20, 689	34, 893	25, 772	859	16 by 9.3, 10.9 by 9.3, f. f., s. l., 39.07 m., to Trenton Crossing, d. l. residue, 17.30 m.	14¼*	86 00	.....	152
45,598	31, 121	76, 719	68, 887	1, 148	no r. a	18	85 73	60 days, in May and August, 1875.	153
26,571	13, 160	39, 731	26, 994	899	11 by 6, f. f., s. l	6	85 00	In January, 1876	154
42,512	52, 668	95, 180	22, 589	752	21.6 by 8.6, f. f., s. l	7	82 00	Main route; branch $50, (292.)	155

E.—*Table showing the weight of the mails, the speed with which they*

Order.	State.	Number of route.	New number of route.	Termini.	Corporate title of company carrying the mail.	Length of route.	Miles per hour.
						Miles.	
156	Ohio..	9019	21017	Blanchester, Hillsborough ..	Marietta and Cincinnati	21	25
157	Pa....	2445	8045	Miles Grove, New Castle....	Erie and Pittsburgh	83	20
158	.....	.....	.....	.....	.....	.....	.....
159	Iowa .	27011	.....	Viele Junction, Burlington..	Chicago, Burlington & Quincy.	25.75	21
160	Ga....	15010	15010	Savannah, Macon	Central Railroad and Banking Company.	192½	20
161	Iowa .	27011	.....	Keokuk, Viele Junction.....	Chicago, Burlington & Quincy.	17	21
162	S. C...	14003	14003	Branchville, Charleston.....	South Carolina.....	62.25	18
163	Miss..	7002	18002	Memphis, Grenada.....	Mississippi and Tennessee ...	101.7	20
164	Ga....	15005	15005	Millen, Augusta	Central Railroad and Banking Company.	53¼	15
165	Tenn .	19007	19007	Nashville, Hickman.....	Nashville and Chattanooga ...	170.82	20
166	Ind ...	22013	22014	State Line, Logansport.....	Pittsburgh, Cincinnati and Saint Louis.	61	22
167	Kans .	33013	.....	Topeka, Kansas City.....	Atchison, Topeka and Santa Fé	49.84	22
168	Ind ...	22009	22009	Richmond, Chicago	Pittsburgh, Cincinnati and Saint Louis.	225.5	25
169	Tex...	31005	.....	Bremond, Waco	Houston and Texas Central...	44.56	20
170	Ala...	17004	17004	Montgomery, Decatur	South and North Alabama	182.85	25
171	Ala...	17010	17010	Selma, Dalton.....	Selma, Rome and Dalton	237.5	20
172	N. Y..	1288	.....	Carthage, Theresa Junction	Utica and Black River	20.5	20
173	N. C ..	13004	13004	Goldsborough, Greensborough.	Richmond and Danville.....	130.35	21
174	Md ...	3507	10006	Baltimore, Williamsport	Western Maryland.....	91.62	25
175	Ky ...	20002	20002	Lexington, Nicholasville	Kentucky Central	13	22
176	N. C ..	13001	13001	Raleigh, Weldon.....	Raleigh and Gaston.....	97	20
177	Ga ...	6006	15007	Union Point, Athens.....	Georgia	39.92	25
178	Ohio ..	9033	21029	Morrow, Dresden	Pittsburgh, Cincinnati and Saint Louis.	149.4	24
179	N. J ..	2112	7020	Millville, Cape May.....	West Jersey.....	41	32
180	Ill	23038	.....	Peoria, Jacksonville	Peoria, Pekin and Jacksonville	87.40	19
181	Va....	4415	11015	Portsmouth, Weldon.....	Seaboard and Roanoke.....	79.26	30
182	S. C...	5602	14001	Columbia, Greenville.....	Greenville and Columbia.....	144.01	15
183	Md ...	3513	10012	Clayton, Chestertown.	Kent County.....	30.80	16
184	Miss..	18006	18006	Grand Gulf, Port Gibson....	Grand Gulf and Fort Gibson..	8	18
185	Ohio ..	9042	21038	Newark, Shawnee.....	Newark, Somerset and Straitsville.	44.045	27
185	Nev ..	45001	.....	Reno, Virginia City.....	Virginia and Truckee.....	51.75	16
186	N. Y..	1804	.....	Saratoga Springs, North Creek.	Adirondack.....	57.96	20
187	Ga....	15016	15016	Macon, Eufaula.....	Southwestern.....	144.84	17½
188	S. C...	14003	14003	Kingsville, Augusta	South Carolina.....	118	17
189	S. C...	14003	14003	Kingsville, Columbia.....	.....do	25.70	18
190	N. J ..	2258	7003	Elizabethport, Sea Plain	Central, of New Jersey.....	47.9	27
191	Miss..	18002	18002	Memphis, Grenada.....	Mississippi and Tennessee....	101.7	20
192	Ga....	15013	15013	Macon, Brunswick.....	Macon and Brunswick	188	18

are conveyed, the accommodations for mails and agents, &c.—Continued.

Whole weight carried any distance for thirty days.			Average weight carried whole distance.		Size, &c., of mail-car or apartment.	Trips per week.	Pay per mile per annum.	Remarks.	Order.
Outward.	Inward.	Total.	30 days, total.	Per day, total.					
Lbs.	*Lbs.*	*Lbs.*	*Lbs.*	*Lbs.*	*Feet and inches.*				
5,488	2,732	8,220	6,493	216	b. c., no r. a	12	$81 00		156
28,112	48,355	76,467	48,190	1,606	12 by 9, f. f., s. l	12	80 00	In August, 1875	157
.....	.....	.....	.....	.....	.....	.....	.....	Vacant	158
.....	.....	.....	22,145	738	15.3 by 8.9, f. f., s. l	12	80 00	Part; with lap. Lap 6 trips, (161.)	159
25,104	22,475	47,579	22,697	597	8.2 by 7, f. f., s. l	14	80 00	38 days, 8 from March 15 and 30 from May 15, 1876.	160
.....	.....	.....	17,213	574	15.3 by 8.9, f. f., s. l	12	80 00	Part; residue lap, (159)	161
11,931	6,986	18,917	16,914	563	10 by 8, f. f., s. l	20	80 00	Branch; main route $70, (188.) 1.25 m. decrease.	162
9,322	11,492	20,814	11,535	384	12.2½ by 6.10, f. f., s. l	10*	80 00	In October, 1875	163
11,973	12,195	24,168	20,737	518	8.2 by 7, f. f., s. l	14	79 00	40 days, 10 from March 15 and 30 from May 15, 1876.	164
19,969	19,674	39,643	22,010	733	12.6 by 8.8, f. f., s. l	12½*	78 00		165
10,621	19,096	29,717	21,324	710	18.4 by 8.7, f. f., s. l	6	75 00		166
7,827	17,100	24,927	21,261	708	13 by 8.6, (average,) f. f., s. l	7	75 00	In January, 1876	167
26,690	22,257	48,947	19,846	661	11 by 8.9, f. f., s. l	13	75 00		168
11,911	8,314	20,225	19,028	634	14 by 7.3, f. f., s. l	6	75 00	In March, 1875	169
25,773	39,207	64,980	18,332	611	14 by 7.6, s. l	7	75 00	63.8 miles at $117.50.	170
28,602	40,752	69,354	29,553	546	15 by 7.8, f. f., s. l	7	75 00	54 days, 24 from March 15 and 30 from May 15, 1876.	171
.....	.....	.....	15,870	529	9 by 9, f. f., s. l	12	75 00	Part. In March, 1876.	172
18,031	14,586	32,617	15,748	524	19 by 8, f. f., s. l	7	75 00	Part; residue $164, (68.)	173
21,622	11,826	33,448	15,298	509	10.6 by 8, f. f., s. l	12	75 00	In March, 1876. 6.12 miles at $40.	174
.....	.....	.....	12,711	423	12 by 6.6, fixtures, s. l	6	75 00	Part; residue $109, (114.) See whole route, (113.)	175
8,531	12,590	21,121	12,104	403	12 by 9, f. f., s. l	6	75 00		176
7,274	7,421	14,695	11,276	375	24.6 by 8.6, f. f., s. l	13	75 00	In October, 1875	177
20,600	16,832	37,432	10,753	358	14.6 by 6.10 f. f., s. l	6½*	75 00		178
7,647	5,675	13,322	9,804	326	13 by 8.3, f. f., s. l	12	75 00	In March, 1876	179
10,504	9,880	20,384	9,686	322	13.4 by 8, f. f., s. l	6½*	75 00	In Mar., 1875. (See F.)	180
10,822	9,330	20,152	9,367	312	20.6 by 8.6, f. f. c. and m. c	6⅝*	75 00	In October, 1875. 0.74 m. decrease.	181
13,138	8,685	21,823	9,141	304	12 by 7, f. f., s. l	6	75 00	In October, 1875 Main route; branches $30, (433, 434.)	182
6,344	4,642	10,986	8,417	280	16 by 6, f. f., s. l	6	75 00	In July, 1876. $75 on 19.55 miles.	183
1,424	790	2,214	2,214	73	in charge train-men	6	75 00		184
3,903	2,464	6,367	1,911	63	14 by 9, f. f., s. l	8½*	75 00		185
16,842	9,880	26,722	23,597	786	13.10 by 8, s. l	7	72 29	In March, 1876	185a
13,409	9,454	22,863	17,349	578	13.6 by 5.10, f. f., s. l	6	72 00		186
26,896	15,221	42,117	21,392	475	12.8 by 6.3, f. f., s. l	6	70 00	45 days, 15 from March 15 and 30 from May 15, 1876. Main route; branches $50, $40, $35, (278, 410, 429.)	187
14,451	19,727	34,178	13,942	464	10 by 8, f. f., s. l	13	70 00	Main route; branches $80, $70, $50, (162, 189, 352.)	188
8,429	5,734	14,163	13,548	451	10 by 8, f. f., s. l	13	70 00	Branch; main route $70, (188.)	189
13,138	7,142	20,280	12,660	422	12 by 7, fixtures, s. l	12	68 00		190
11,363	12,463	23,826	14,381	479	13.2 by 6.10, f. f., s. l	10*	65 00		191
16,661	11,017	27,678	20,240	439	14 by 7, f. f., s. l	6	65 00	46 days, 16 from March 15 and 30 from May 15, 1876; 7 trips part of the year. Main route; branch $40, (419.)	192

E.—*Table showing the weight of the mails, the speed with which they*

Order.	State.	Number of route.	New number of route.	Termini.	Corporate title of company carrying the mail.	Length of route.	Miles per hour.
						Miles.	
193	Ohio..	9034	21030	Dayton, Richmond	Pittsburgh, Cincinnati and Saint Louis.	42	25
194	Ky ...	20011	20011	Louisville, Elizabethtown, Paducah.	Louisville, Paducah and Southwestern.	232.19	20
195	Ill	23005	.....	Sterling, East Saint Louis	Saint Louis, Rock Island and Chicago.	291.36	22
196	Ga ...	15007	15007	Union Point, Athens	Georgia	39.92	20
197	Ala ...	17007	17007	Opelika, Columbus	Western, of Alabama	28	15
198	N. Y..	1290	.....	Buffalo, Jamestown	Buffalo and Jamestown	71.09	25
199	Utah .	41002	.....	Salt Lake City, Provo City	Utah Southern	49	15
200	Ohio ..	9035	21031	North Bend, Hagerstown	White Water Valley	72.58	25
201	Ga....	15018	15018	Thomasville, Albany	Atlantic and Gulf	58.91	17.5
202	N. J ..	2113	7021	Elmer, Salem	West Jersey	16.60	23.13
203	Kans .	33009	.....	Atchison, Lincoln	Atchison and Nebraska	152.28	23
204	Ohio ..	9047	21043	Mansfield, Toledo	Pennsylvania Company	88.10	22
205	Col ...	38005	.....	Kit Carson, West Las Animas	Arkansas Valley	56	20
206	Cal ...	46017	.....	Los Angeles, Anaheim	Southern Pacific	21.7	20
207	Ohio ..	9026	21022	Dayton, Union City	Dayton and Union	48.17	20
208	Miss ..	7004	18004	Artesia, Columbus	Mobile and Ohio	14	9
209	Miss ..	18003	18003	Vicksburgh, Meridian	Vicksburgh and Meridian	140.7	18
210	Ky ...	20016	20016	Maysville, Paris	Maysville and Lexington	50	19½
211	Miss ..	18003	18003	Jackson, Meridian	Vicksburgh and Meridian	95.2	18
212	Kans .	33006	.....	Junction City, Parsons	Missouri, Kansas and Texas	156.5	16
213	S. C...	14001	14001	Columbia, Greenville	Greenville and Columbia	144.01	16
214	Ind ...	22019	22020	Fort Wayne, Connersville	Fort Wayne, Muncie and Cincinnati.	109	22
215	R. I...	825	.....	Wickford Landing, Wickford Junction.	Newport and Wickford Railroad and Steamboat Co.	3.40	30
216	Mo ...	28016	.....	Pleasant Hill, Carbondale	Saint Louis, Lawrence and Western.	94	20
217	Ga....	15009	15009	Dupont, Bainbridge	Atlantic and Gulf	106.37	18
218	N. Y..	1288	.....	Carthage, Morristown	Utica and Black River	50.08	20
219	N. Y..	1288	.....	Carthage, Clayton	.....do	36¼	20
220	N. C ..	13006	13006	Salisbury, Henry's	Western North Carolina	117.31	13
221	N. Y..	1296	.....	New York, Patchogue	Flushing, North Side and Central.	59.21	25.5
222	N. Y..	1288	.....	Theresa Junction, Morristown.	Utica and Black River	29.58	20
223	Mich .	24008	.....	Fort Wayne, Jackson	Fort Wayne, Jackson and Saginaw.	96.82	22
224	Ala ...	17009	17009	Selma, Meridian	Alabama Central	108.2	16¼
225	Ind ...	22014	22015	Peru, La Porte	Chicago, Cincinnati and Louisville.	73	21
226	N. C ..	13005	13005	Goldsborough, Morehead City.	Atlantic and North Carolina	94.04	20
227	N. C ..	13003	13003	Wilmington, Charlotte	Carolina Central	195.90	17¼
228	Ky ...	20007	20007	Lebanon Junction, Fish Point.	Louisville and Nashville	109.9	.....
229	Ky ...	20007	20007	Lebanon Junction, Richmond Junction.	.....do	76.4	20
230	Ga....	15021	15021	Camak, Macon	Macon and Augusta	80.66	25

are conveyed, the accommodations for mails and agents, &c.—Continued.

Whole weight carried any distance for thirty days.			Average weight carried whole distance.		Size, &c., of mail-car or apartment.	Trips per week.	Pay per mile per annum.	Remarks.	Order.
Outward.	Inward.	Total.	30 days, total.	Per day, total.					
Lbs.	*Lbs.*	*Lbs.*	*Lbs.*	*Lbs.*	*Feet and inches.*				
6,712	4,015	10,727	8,599	286	14 by 8.7, f. f., s. l.	12	$65 00		193
29,723	18,298	48,021	19,240	641	10.3 by 8, (average,) s. l.	6	64 00		194
32,504	33,942	66,446	13,522	450	12 by 9.4. f, f., s. l.	13½*	64 00		195
7,028	7,380	14,408	11,218	373	9 by 6.8, f. f., s. l	6	64 00		196
12,102	10,456	22,558	20,445	444	18 by 8.6, f. f., s. l.	14	63 00	46 days, 16 from March 15 and 30 from May 15, 1876.	197
14,539	8,679	23,218	10,962	365	18 by 7, f. f., s. l	6⅔*	63 00	In March, 1876	198
8,442	5,271	13,713	10,851	361	15 by 8.9, f. f., s. l.	7	63 00	In July, 1875	199
10,951	14,996	25,947	13,331	444	12 by 7.8, f. f., s. l.	6	62 50		200
3,200	3,346	6,546	4,223	140	12 by 6, f. f., s. l	7	62 00		201
4,184	2,791	6,975	5,662	188	10.7 by 6.6. No r. a	12	60 24	In March, 1876	202
16,909	15,851	32,760	16,763	558	18.2 by 8.10, 12 by 7, f. f. c., s. l.	6	60 00	In June, 1876	203
13,119	12,954	26,123	14,782	492	10 by 6.8, fixtures, s. l.	12	60 00		204
9,552	3,842	13,394	13,394	446	in b. c. No r. a	7	60 00	In September, 1875	205
8,334	4,088	12,422	11,210	373	no r. a	7	60 00	In August, 1876	206
8,795	6,166	14,961	7,811	260	11 by 7.4, f. f., s. l.	12	60 00		207
3,339	1,797	5,136	5,136	171	in b. c. No r. a	14	60 00	In October, 1875. Branch; main route $125, (103.)	208
16,275	32,404	48,679	.....	.....	12 by 7.2, f. f., s. l.	7	59 00	45.5 miles at $100. See parts, (133, 211.)	209
6,296	12,149	18,445	12,493	416	10 by 7.6, f. f., s. l.	6	59 00		210
.....	.....	.....	11,388	379	12 by 7.2, f. f., s. l.	7	59 00	Part; residue $100, (133.)	211
13,027	14,690	27,717	15,278	509	11 by 7, f. f., s. l	7	58 00	In July, 1875. Weighing voluntary.	212
12,562	11,979	24,541	10,466	348	12 by 8, f. f., s. l	6	58 00	Main route; branches $50, (302, 347.)	213
11,577	15,018	26,595	9,261	308	12 by 7.8, f. f., s. l.	6	58 00		214
2,938	6,495	9,433	9,052	301	no apt. No r. a	15½*	58 00	In October, 1875	215
13,465	5,051	18,516	8,976	299	13 by 6.1½, f. f., s. l.	6	58 00	In June, 1876	216
6,701	4,157	10,858	4,807	160	12 by 7, (average,) f. f., s. l	7	58 00	Branch; main route $120, (104.)	217
11,107	7,842	18,949	10,834	361	9 by 9, f. f., s. l	9*	57 00	Branch; main route $57, (219.) 20.50 m. at $75.	218
13,802	9,193	22,995	10,221	340	9 by 9, f. f., s. l., 18 m. In charge of baggage-master residue, 16 m.	12	57 00	Main route; branches $57, $75, (172, 222.)	219
13,849	5,290	19,139	9,207	306	10.3 by 8.3, 3.6 by 3.6, f. f., s. l.	6	57 00	Weight to Old Fort, 3 miles less.	220
15,589	12,239	27,828	8,736	291	12 by 6, f. f., s. l	12	57 00	Main route; branch $50, (309.) In Aug., 1875.	221
8,246	5,366	13,612	8,578	285	9 by 9, f. f., s. l	12	57 00	Branch; main route $57, (219.) In Mar., 1876.	222
9,429	9,911	19,340	6,601	220	10.4 by 7.2, f. f., s. l	6	57 00	In April, 1875	223
22,889	17,371	40,260	18,518	411	12.4 by 7.2, 12 by 7, f. f., s. l.	7	56 00	45 days, 15 from Mar. 15 and 30 from May 15 1876. Average speed.	224
8,833	9,913	18,746	10,090	336	12 by 7.1, f. f., s. l.	12	55 00		225
10,098	5,493	15,591	9,375	312	10.3 by 7.2, fixtures, s. l.	6	55 00		226
14,882	10,756	25,638	8,073	269	14 by 8.11, f. f., s. l.	13	55 00	In December, 1875	227
36,794	14,451	41,245	.....	.....	.....	....	54 00	Whole route; see parts, (229, 234.)	228
.....	.....	.....	22,264	742	14 by 7.4, f. f., s. l.	6	54 00	Main route, part; residue $54, (234.) Branch $50, (260.) See whole route, (228.)	229
15,425	9,996	25,421	15,422	328	11 by 6.7, f. f., s. l.	6	54 00	47 days, 17 from March 15 and 30 from May 15, 1876.	230

E.—*Table showing the weight of the mails, the speed with which they*

Order.	State.	Number of route.	New number of route.	Termini.	Corporate title of company carrying the mail.	Length of route.	Miles per hour.
						Miles.	
231	Ind...	22023	22024	Terre Haute, Danville.....	Evansville, Terre Haute and Chicago.	56.6	22
232	N. Y..	1806	.....	Manorville, Sag Harbor.....	Long Island	35.25	24
233	Ala...	17002	17002	Montgomery, Selma	Western, of Alabama.....	50	23
234	Ky ...	20007	20007	Richmond Junction, Fish Point.	Louisville and Nashville.....	33.5	13
235	N. C..	13010	13010	Raleigh, Cameron	Raleigh and Augusta Air Line	58.78	20
236	S. C ..	14006	14006	Florence, Cheraw.....	Cheraw and Darlington.....	40.88	13½
237	Ohio..	9039	21035	Youngstown, Cross Cut	Pittsburgh, Fort Wayne and Chicago.	22.8	22
238	Del ...	3403	9503	Clayton, Easton.....	Maryland and Delaware	44	25
239	Ohio..	9037	21033	Springfield, Columbus	Cincinnati, Sandusky and Cleveland.	45.86	.....
240	Ind ...	22026	22027	Butler, Logansport	Detroit, Eel River and Illinois	94.5	25
241	Utah ..	41002	.....	Provo City, York	Utah Southern.....	27	15
242	N. Y..	1811	.....	Rochester, Charlotte.....	New York Central and Hudson River.	9	25
243	Mich..	24008	.....	Jackson, Fort Wayne.....	Fort Wayne, Jackson and Saginaw.	96.82	20
244	Ky ...	20013	20013	Anchorage, Shelbyville.....	Louisville, Cincinnati and Lexington.	19	18
245	Pa....	2429	8029	New Castle, Homewood.....	Pittsburgh, Fort Wayne and Chicago.	15	23
246	N.J...	2122	7028	New York, Denville	Delaware, Lackawanna and Western.	35.93	26½
247	Utah .	41003	.....	Ogden, Franklin	Utah Northern	79.94	14
248	Cal ...	46011	.....	San Francisco, Cloverdale...	San Francisco and North Pacific.	90	25
249	Ohio..	9045	21041	Lorain, Uhricksville.....	Cleveland, Tuscarawas Valley and Wheeling, (late Lake Shore and Tuscarawas Valley.)	102.45	25
250	Ind ...	22008	22008	New Albany, Michigan City	Louisville, New Albany and Chicago.	288	20
251	Ohio..	9053	21049	Marietta, Parkersburgh	Marietta and Cincinnati	15.87	25
252	Ohio..	9006	21005	Leavittsburgh, Sharpsville..	Atlantic and Great Western..	34.65	25
253	Ind...	22020	22021	Richmond, Fort Wayne	Grand Rapids and Indiana....	91.50	24
254	Ga....	6012	15013	Macon, Brunswick.....	Macon and Brunswick.....	188	24
255	Ind...	22001	22001	Indianapolis, Vincennes	Indianapolis and Vincennes...	116.32	23
256	Ohio..	9028	21024	Hamilton, Indianapolis.....	Cincinnati, Hamilton and Indianapolis.	99.49	24.5
257	N. Y..	1284	.....	Cayuga, Ithaca	Cayuga.....	38.05	25
258	Ga....	6016	15018	Thomasville, Albany.....	Atlantic and Gulf.....	60.79	17.5
259	Ind...	22006	22006	Columbus, Madison.....	Jeffersonville, Madison and Indianapolis.	46	20
260	Ky ...	20007	20007	Richmond Junction, Richmond.	Louisville and Nashville.....	33.8	20
261	Ind...	22020	22021	Richmond, Fort Wayne.....	Grand Rapids and Indiana....	91.5	23
262	Fla ...	16003	16003	Pensacola, Whiting Junction	Pensacola and Louisville.....	44.05	13
263	N. J ..	2106	7013	Washington, Easton	Morris and Essex.....	14.40	25
264	Ohio..	9009	21008	Bayard, New Philadelphia..	Cleveland and Pittsburgh.....	32.5	15
265	N. Y..	1234	.....	Hicksville, Port Jefferson...	Long Island	36.5	23
266	Ind...	22016	22017	Bradford, Logansport.....	Pittsburgh, Cincinnati and Saint Louis.	114.6	23

are conveyed, the accommodations for mails and agents, &c.—Continued.

Whole weight carried any distance for thirty days.			Average weight carried whole distance.		Size, &c., of mail-car or apartment.	Trips per week.	Pay per mile per annum.	Remarks.	Order.
Outward.	Inward.	Total.	30 days, total.	Per day, total.					
Lbs.	*Lbs.*	*Lbs.*	*Lbs.*	*Lbs.*	*Feet and inches.*				
7,772	8,076	15,848	9,777	325	9.6 by 6.6, f. f., s. l.	13	$54 00		231
7,459	4,506	11,965	7,531	250	10.8 by 9, f. fixtures, s. l.	6	54 00	In March, 1876	232
7,812	4,886	12,698	10,190	205	18 by 8.6, f. f., s. l.	7	54 00	45 days, 15 from March 15 and 30 from May 15, 1876.	233
.....	.....	.....	2,968	98	b. c.	6	54 00	Main route. Part; residue $54, (229;) branch $50, (260.) See whole route, (228.)	234
5,814	2,684	8,498	6,173	205	11 2 by 9, f. f., s. l.	6	53 00	Weight to Sanford, 45.78 miles; 13 miles at $50.	235
5,223	3,642	8,865	5,821	194	13 by 9.9, f. f., s. l.	6	53 00		236
3,821	4,828	8,649	5,562	185	9.4 by 8.10, fixtures, s. l.	6	53 00	In March, 1876	237
8,802	5,441	14,243	10,021	334	10 by 6.6, f. f., s. l.	6	52 50	In March, 1876	238
8,518	7,586	16,104	12,750	425	.....	....	52 00		239
10,007	12,249	22,256	9,926	330	14 by 7.2, f. f., s. l.	6	52 00		240
5,704	3,239	8,943	7,082	235	15 by 8 9, f. f., s. l.	7	52 00	In July, 1875. Extension.	241
5,179	1,758	6,937	6,771	225	b. c., no r. a	12	52 00	In November 1875	242
10,689	20,039	30,728	13,088	436	10.6 by 9, f. f., s. l.	10⅔*	51 00		243
4,840	3,785	8,625	5,376	179	12 by 5, fixtures, s. l.	12	51 00		244
18,749	49,258	68,007	64,217	2,140	12 by 9, f. f., s. l.	12	50 00	In August, 1875	245
24,318	14,727	39,045	31,747	1,058	6.8 by 6.8, 6.6 by 5.3, 19.9 by 7.6, f. f., s. l.	18	50 00	In July, 1874; reported November, 1875.	246
15,649	7,308	22,957	19,354	645	freight-car, 24 by 8, f. f., s. l	7	50 00	In August, 1875	247
17,404	7,229	24,633	18,962	632	12 by 9, s. l.	7	50 00	In June, 1876	248
20,220	19,196	39,416	15,560	518	14.7 by 9, f. f., s. l.	6⅔*	50 00		249
26,600	30,875	57,475	15,203	506	11 by 7, f. f., s. l.	7*	50 00	About 15 pounds per day not weighed.	250
7,176	8,883	16,059	14,003	466	b. c., no r. a.	26	50 00		251
.....	.....	.....	12,522	417	14.4 by 7.10, f. f., s. l.	11*	50 00	Part; residue $100, (129.) 3.04 miles at $38. See whole route, (123.)	252
14,127	10,378	24,505	11,944	398	14.6 by 6.10, fixtures, s. l.	12	50 00	In March, 1876	253
17,317	10,587	27,904	11,626	387	13.6 by 6.8, f. f., s. l.	7½*	50 00	In October, 1875. Main route; branch $40, (414.)	254
14,961	8,469	23,430	11,265	375	10 by 8, f. f., s. l.	6	50 00		255
17,321	12,224	29,545	11,173	372	10.5 by 7.3, f. f., s. l.	15⅔*	50 00		256
10,275	8,076	18,351	10,635	354	9.6 by 7.6, f. f., s. l.	9*	50 00	In November, 1875	257
.....	.....	.....	20,854	347	12 by 6, f. f., s. l.	7	50 00	60 days, in January and October, 1875.	258
11,440	7,702	19,142	10,356	345	11 by 6, f. f., s. l.	12*	50 00		259
8,512	5,067	13,579	10,287	342	14 by 7.4, f. f., s. l.	6	50 00	Branch; main route $54, (234.)	260
12,208	10,544	22,752	10,211	340	13.8 by 6.8, fixtures, s. l.	9*	50 00	In April, 1875. Weighing voluntary.	261
3,790	7,285	11,075	10,142	338	7.6 by 7, f. f., s. l.	13	50 00		262
.....	.....	.....	9,935	331	11.7 by 7.7, f. f., s. l.	6	50 00	In July, 1874; reported November, 1875. Part; residue $100, $50, (122, 364.)	263
10,419	6,562	16,981	9,639	321	13 by 9, f. f., s. l.	6	50 00		264
12,343	6,766	19,109	9,628	320	13 by 8, f. f., d. l. to Northport, 16½ m.; s. l. res., 20 m	12	50 00	In October, 1875	265
19,647	12,919	23,566	9,307	310	11.10 by 8, f. f., s. l.	12	50 00		266

E.—*Table showing the weight of the mails, the speed with which*

Order.	State.	Number of route.	New number of route.	Termini.	Corporate title of company carrying the mail.	Length of route.
						Miles.
267	S. C...	14010	14010	Port Royal, Auguste.....	Port Royal.....	112.2
268	Ga....	6008	15009	Dupont, Bainbridge.....	Atlantic and Gulf.....	106.48
269	N. C..	5006	13006	Salisbury, Old Fort.....	Western North Carolina.....	114.31
270	N. C..	13012	13012	Greensborough, Salem	Northwestern North Carolina	29.31
271	Ill	23053	.....	East Saint Louis, Cairo.....	Cairo and Saint Louis.....	148.50
272	Ala...	17008	17008	Columbus, Troy	Mobile and Girard.....	90
273	N. Y..	1287	.....	Oswego, Charlotte	Rome, Watertown and Ogdensburgh.	69.64
274	Ky ...	20017	20017	Lexington, Mount Sterling..	Louisville, Cincinnati and Lexington.	33.64
275	Ind...	22023	22024	Terre Haute, Danville	Evansville, Terre Haute and Chicago.	56.6
276	Pa....	2431	8031	Columbia, Sinking Springs..	Reading and Columbia.....	39.70
277	Ohio..	9024	21020	Fremont, Saint Mary's.....	Lake Erie and Louisville	89.35
278	Ga....	15016	15016	Smithville, Albany.....	Southwestern.....	23.78
279	Ind...	22027	22028	Rockville, Logansport	Logansport, Crawfordsville and Southwestern.	92.10
280	S. C...	5608	14006	Florence, Cheraw.....	Cheraw and Darlington.....	40.88
281	Ohio..	9041	21037	Niles, New Lisbon.....	Atlantic and Great Western..	33.94
282	Ohio..	9039	.....	Youngstown, Cross Cut.....	Pittsburgh, Fort Wayne and Chicago.	22.8
283	Ala...	17003	17003	Montgomery, Eufaula.....	Montgomery and Eufala.....	81.24
284	Ill	23050	.....	Robinson, Danville.....	Paris and Danville	82.38
285	Ohio..	9037	21033	Springfield, Columbus	Cincinnati, Sandusky and Cleveland.	45.86
286	N. Y..	1223	.....	Schenectady, Ballston.....	Delaware and Hudson Canal Company.	16
287	Ala...	17006	17006	Marion Junction, Greensborough.	Selma, Marion and Memphis..	37.25
288	Me ...	231	.....	West Waterville, North Anson.	Somerset.....	25.7
289	Ky ...	9796*a*	20013	Anchorage, Shelbyville	Louisville, Cincinnati and Lexington.	19
290	Del ...	3406	9506	Georgetown, Selbyville.....	Breakwater and Frankford....	19.30
291	Iowa..	27016	.....	Washington, Oskaloosa.....	Chicago, Rock Island and Pacific.	54.01
292	Miss..	18004	18004	Artesia, Columbus.....	Mobile and Ohio.....	14
293	Tenn .	19016	19001	Nashville, Lebanon.....	Tennessee and Pacific	32¾
294	Ohio..	9028	.....	Hamilton, Indianapolis	Cincinnati, Hamilton and Indianapolis.	99.49
295	N. Y.	1244	.....	Cobleskill, Cherry Valley...	Delaware and Hudson Canal Company.	22.47
296	N. Y..	1295	.....	New York, Babylon.....	Southern, of Long Island	36.25
297	Ind...	22012*a*	22013	Terre Haute, Rockville.....	Logansport, Crawfordsville and Southwestern.	23
298	Wis ..	25026	.....	Eau Claire, Chippewa Falls	Chippewa Falls and Western.	11.67
299	Md ...	3517	10016	Selbyville, Stockton	Worcester	31.44
300	N. Y..	1812	.....	Rhine Cliff, Boston Corner..	Rhinebeck and Connecticut ..	35.2
301	Ky ...	20015	20015	Owensborough, Owensborough Junction.	Evansville, Owensborough and Nashville	36.13
302	S. C...	14001	14001	Belton, Anderson Court-House.	Greenville and Columbia.....	10.01
303	Vt....	532	.....	White River Junction, Woodstock.	Woodstock	14.53
304	Ind...	22025	22026	La Porte, Michigan City....	Indianapolis, Peru and Chicago	12.36
305	Ala...	6603	17003	Montgomery, Eufaula.....	Montgomery and Eufaula.....	81.24
306	Ohio..	9036	21032	Means, Cadiz.....	Pittsburgh, Cincinnati and Saint Louis.	8
307	Tenn .	19004	19004	Wartrace Depot, Shelbyville	Nashville and Chattanooga....	8

are conveyed, the accommodations for mails and agents, &c.—Continued.

Whole weight carried any distance for thirty days.			Average weight carried whole distance.		Size, &c., of mail-car or apartment.	Trips per week.	Pay per mile per annum.	Remarks.	Order.
Outward.	Inward.	Total.	30 days, total.	Per day, total.					
Lbs.	*Lbs.*	*Lbs*	*Lbs.*	*Lbs.*	*Feet and inches.*				
14,119	20,378	34,497	15,632	306	10.6 by 6.10, f. f., s. l	6	$50 00	51 days, 21 from March 15 and 30 from May 15, 1876.	267
.....	.....	.....	18,271	304	12 by 8, 12 by 6, f. f., s. l	7	50 00	60 days, in January and October, 1875. Branch; main route $100, (124.)	268
12,734	5,129	17,863	8,565	285	10.3 by 8.3, f. f, s. l	6	50 00	In October, 1875	269
5,786	3,587	9,373	8,537	284	21 by 8.2, f. f., s. l	6	50 00	.....	270
15,925	9,126	25,051	8,433	281	9 by 6, fixtures, s. l	6	50 00	In March, 1876	271
13,038	9,114	22,152	13,452	274	12 by 7, f. f., s. l	6	50 00	7 trips from August 1, 1876. 49 days, 19 from March 15 and 30 from May 15, 1876.	272
7,091	10,557	17,648	8,248	274	23 by 6.7½, f. f., s. l	6	50 00	$50 on 51.81 miles	273
6,987	4,069	11,056	8,033	267	8.6 by 6, f. f., s. l., and b. c	12	50 00	.....	274
6,582	6,853	13,415	7,734	257	9.6 by 6.6, f. f., s. l	13	50 00	In October, 1875	275
8,867	6,822	15,689	7,514	250	7.4 by 6.6, f. f., s. l	18	50 00	Main route; branch $50, (322.)	276
12,056	9,256	21,312	7,436	247	13 by 7, fixtures, s. l	6	50 00	.....	277
5,191	2,974	8,165	7,411	247	closet, 3 by 4; no r. a	5*	50 00	Branch: main route $70, (187.)	278
11,726	7,408	19,134	7,410	247	12 by 8.9, f. f., s. l	6	50 00	.....	279
7,340	3,344	10,684	7,362	245	20 by —, f. f., s. l	6	50 00	In October, 1875	280
8,525	5,581	14,106	7,360	245	15 3 by 7.3, f. f., s. l	6	50 00	.....	281
4,455	6,092	10,547	7,167	239	12 by 9, f. f., s. l	12	50 00	In August, 1875	282
9,956	9,060	19,018	11,204	233	9.5 by 6.6, f. f., s. l	7⅞	50 00	48 days, 18 from March 15 and 30 from May 15, 1876.	283
5,006	8,633	13,639	6,991	233	12 by 7, fixtures, s. l	6	50 00	In January, 1876	284
5,370	4,855	10,225	6,867	229	16.8 by 6, f. f. and m. c., s. l	6	50 00	In April, 1875	285
11,359	5,477	16,836	13,477	224	no r. a	6	50 00	60 days, in May and August, 1875.	286
6,154	5,513	11,667	6,677	222	8.5 by 6.6, f. f., s. l	6	50 00	.....	287
5,402	3,266	8,668	6,620	220	12.6 by 6.6, f. f., s. l	6	50 00	In March, 1876	288
5,712	4,557	10,269	6,510	217	r. a. in b. c., d. l	12	50 00	In August, 1875	289
4,378	2,956	7,334	6,106	203	7 by 7, fixtures, s. l	6	50 00	.....	290
5,441	3,731	9,172	6,086	202	10 by 9, f. f., s. l	6	50 00	In July, 1876	291
3,828	2,241	6,069	6,069	202	in b. c., no r. a	7	50 00	Branch; main route $82, (155.)	292
5,381	2,476	7,857	6,055	201	r. a. in b. c	6	50 00	In March, 1876	293
8,728	8,701	17,429	5,746	191	10 by 9, f. f., s. l	6	50 00	Returns for October, 1873, received October, 1875.	294
10,601	6,120	16,721	11,416	190	no apt.; no r. a	6	50 00	60 days, in May and August, 1875.	295
7,325	4,944	12,269	5,576	185	12 by 6, f. f, s. l	12	50 00	In August, 1875	296
3,043	3,816	6,859	5,551	185	12 by 8.9, f. f., s. l	6	50 00	.....	297
3,739	2,037	5,776	5,498	183	b. c.; no r. a	12	50 00	In May, 1876	298
3,940	2,968	6,948	5,436	181	7 by 7, fixtures, s. l	6	50 00	In March, 1876	299
6,176	3,232	9,408	5,372	179	7 by 6, f. f., s. l	6	50 00	.....	300
3,067	4,931	7,998	5,354	178	9 by 6, f. f., s. l	6	50 00	.....	301
3,042	2,274	5,316	5,316	177	no r. a	6	50 00	Branch; main route $58, (213.)	302
3,935	3,134	7,069	5,300	176	b. c.; no r. a	12	50 00	In January, 1876	303
2,737	2,649	5,386	5,243	174	12 by 7.1, f. f., s. l	12	50 00	.....	304
5,470	3,484	8,954	5,229	174	11.6 by 6.6, f. f., s. l	6	50 00	In October, 1875	305
3,566	1,823	5,389	5,173	172	b. c.; no r. a	12	50 00	Branch; main route $230, (36.)	306
3,201	1,830	5,031	5,031	167	in charge baggage-master	12	50 00	Branch; main route $145, $205, (46, 91.)	307

E.—*Table showing the weight of the mails, the speed with which they*

Order.	State.	Number of route.	New number of route.	Termini.	Corporate title of company carrying the mail.	Length of route.	Miles per hour.
						Miles.	
308	N. C ..	13002	13002	Rocky Mount, Tarborough..	Wilmington and Weldon.....	19.79	15
309	N. Y..	1296	.....	Flushing, Whitestone.....	Flushing, North Side and Central.	3.12	25.5
310	Ill ..	23048	.....	Terre Haute, Peoria	Illinois Midland	179.93	27
311	Mich .	24036	....	Grosse Isle, Fayette	Chicago and Canada Southern	70.30	25
312	Ky ...	20012	20012	Glasgow Junction, Glasgow.	Louisville and Nashville.....	12	16
313	Ill ...	23013	.....	Streator, Altamont.....	Chicago and Paducah..... ...	156.80	20
314	Md ...	3512	10011	Cumberland, Piedmont.....	Cumberland and Pennsylvania	34	15
315	N. C ..	13008	13008	Charlotte, Shelby	Carolina Central	55.25	12
316	Ill ...	23034	.....	Springfield, Gilman.....	Gilman, Clinton and Springfield.	111.60	23
317	Cal ...	46016	.....	Saucelito, Tomales.....	North Pacific Coast.....	49.18	16
318	Ind ...	22021	22022	Anderson Junction, Goshen	Cincinnati, Wabash and Michigan.	114.32	20
319	Ohio ..	9048	21041	Harbor, Youngstown	Pennsylvania Company.....	62.1	21
320	N. Y..	1296	.....	Bayside, Manhasset.....	Flushing, North Side and Central.	3.3	25.5
321	Ky ...	20009	20009	Paducah, Trimble.....	Paducah and Memphis.....	76.64	20
322	Pa....	2431	8031	Junction, Quarryville.....	Reading and Columbia.....	23.20	13
323	N. Y..	1810	.....	Bath, Hammondsport.....	Bath and Hammondsport	9.4	18
324	S. C...	5609	14007	Chester, Yorkville	Chester and Lenoir Narrow-Gauge Railroad, (late King's Mountain.)	24.25	12
325	Fla ...	16001	16001	Fernandina, Cedar Keys....	Atlantic, Gulf and West India Transit Company.	154.8	16
326	Pa....	2496	8094	York, Delta.....	Peach Bottom.....	35.56	15
327	Fla ...	16004	16004	Tocoi, Saint Augustine....	Saint John's	15.69	....
328	Mass .	755	.....	North Brookfield, East Brookfield.	Boston and Albany Railroad Company, (lessees North Brookfield Railroad.)	4.41	22
329	Wis ..	25025	.....	Galena, Platteville.....	Galena and Southern Wisconsin.	30.69	12
330	N. Y..	1261	.....	Hudson, Chatham.....	Hudson and Boston.....	35	20
331	Ind ..	22015	22016	Fairland, Martinsville	Cincinnati and Martinsville ..	38.5	20
332	Pa....	2433	8033	York, Frederick	Pennsylvania	56	20
333	N. Y..	1288	.....	Theresa Junction, Clayton..	Utica and Black River.....	16¼	20
334	Ind ..	22031	22032	Evansville, Boonville	Lake Erie, Evansville and Southwestern.	18	20
335	N. C ..	13011	.....	Fayetteville, Sanford	Western.....	38.53	18
336	S. C...	14008	14008	Allston, Spartanburgh Court-House.	Spartanburgh and Union.....	68.12	11⅓
337	Tenn .	19005	19005	Fayetteville, Decherd	L. D. Hickerson and Anderson Powers, of Memphis and Charleston Railroad, lessees.	40	12
338	N. C ..	13011	13011	Fayetteville, Sanford.....	Western.....	38.53	15
339	Oreg.	44002	.....	Portland, Saint Joseph.....	Oregon Central	48.61	12
340	Ga....	15008	15008	Kingston, Rome	Rome.....	20.35	20
341	Ga....	15006	15006	Washington, Double Wells .	Georgia..... ...	18.86	15
342	.....	.....	.....	.....	.....	.....	.....
343	S. C...	14007	14007	Chester Court-House, Yorkville.	Chester and Lenoir Narrow-Gauge, (late King's Mountain.)	24.25	12
344	Ohio ..	9025	.....	Carey, Findlay	Cincinnati, Sandusky and Cleveland.	16	16
345	Ga....	15014	15014	Gordon, Milledgeville.....	Central Railroad and Banking Company.	18.25	12½
346	Pa....	2500	8098	New Castle, Stoneborough..	New Castle and Franklin.....	36.5	15
347	S. C...	14001	14001	Cokesbury, Abbeville Court-House.	Greenville and Columbia.....	11.81	12
348	Mich .	24026	.....	Grand Rapids, Morgan.....	Grand Rapids, Newaygo and Lake Shore.	36.27	20
349	Ala...	6617	17017	Selma, Pine Apple.....	Selma and Gulf.....	43.19	12

are conveyed, the accommodations for mails and agents, &c.—Continued.

Whole weight carried any distance for thirty days.			Average weight carried whole distance.		Size, &c., of mail-car or apartment.	Trips per week.	Pay per mile per annum.	Remarks.	Order.
Outward.	Inward.	Total.	30 days, total.	Per day, total.					
Lbs.	*Lbs.*	*Lbs.*	*Lbs.*	*Lbs.*	*Feet and inches.*				
3,285	1,700	4,985	4,985	166	10.6 by 7.6, furniture, s. l	7	$50 00	Branch; main route $172, (66.)	308
3,639	2,890	6,529	4,890	163	12 by 6, f. f., s. l	12	50 00	Branch; main route $57, (221.) In August, 1875.	309
9,411	10,488	19,899	4,824	160	11.3 by 8 8, f. f., s. l	6	50 00	In April, 1875	310
5,957	5,208	11,165	4,810	160	10.9 by 9.3, f. f., s. l	6	50 00		311
3,207	1,522	4,729	4,729	157	b. c.; no r. a	10½*	50 00		312
11,158	9,276	20,434	4,589	152	12 by 8, f. f., s. l	6	50 00		313
3,814	5,221	9,035	4,491	149	9 6 by 6.9, f. f., s. l	6	50 00	In March, 1876	314
4,340	2,427	6,767	4,488	149	8 by 8, f. f., s. l	6	50 00		315
6,155	8,657	14,812	4,473	149	11.6 by 7.6, f. f., s. l	6	50 00	In March, 1875	316
5,611	1,876	7,487	4,467	148	11 by 6, fixtures, s. l	6	50 00	In May, 1876	317
8,287	8,498	16,785	4,451	148	10.6 by 6.6, fixtures, s. l	6	50 00		318
7,937	6,566	14,503	4,387	146	9.4 by 8.10, fixtures, s. l	7½*	50 00		319
2,752	1,881	4,633	4,325	144	no. r. a	12	50 00	Branch; main route $57, (221.) In August, 1875.	320
6,974	4,936	11,910	4,268	142	9.3 by 6.10, f. f., s. l	10*	50 00	15 m. per hour on last 15 m.	321
4,030	5,978	10,008	4,213	140	in b. c	18	50 00	Branch; main route $50, (276.)	322
2,503	2,156	4,659	4,180	139	in b. c	15*	50 00		323
2,747	2,465	5,212	4,149	138	closet; no r. a	6	50 00	In October, 1875	324
9,712	5,570	15,282	4,095	136	12 by 5.6, f. f., s. l	6	50 00		325
4,602	3,187	7,789	4,005	133	8.6 by 7.3, fixtures, s. l	6	50 00	In March, 1876	326
2,750	1,162	3,912	3,912	130			50 00		327
1,432	2,467	3,899	3,899	130	in b. c	24	50 00	In March, 1876	328
4,096	2,022	6,118	3,889	129	13 by 7, f. f., s. l	6	50 00	In January, 1876	329
3,368	2,084	5,452	3,881	129	b. c.; no r. a	12	50 00	In January, 1876	330
5,216	3,196	8,412	3,873	129	9 by 6.8, f. f., s. l	6	50 00		331
5,271	4,844	10,115	3,867	128	5.6 by 3.2, fixtures, s. l	6½*	50 00	Main route; branch $50.	332
			3,865	128	in charge baggage-master	12	50 00	Part. In March, 1876	333
2,647	1,350	3,997	3,817	127	chest in express-car	12	50 00		334
3,281	2,177	5,458	3,815	127	10.9 by 6, fixtures, s. l	6	50 00	In August, 1875. Main route; branch $21, (446.)	335
3,683	3,377	7,060	3,702	123	7.1 by 6.5½, f. f., s. l	6	50 00		336
2,688	3,963	6,651	3,638	121	10 by 6, f. f., s. l	6	50 00		337
1,952	2,892	4,844	3,628	120	10.9 by 5.9, f. f., s. l	6	50 00	Main route; branch $50, (376.) In March, 1876.	338
3,947	2,769	6,716	3,608	120	8 by 8, f. f., s. l	6	50 00	In September, 1875	339
2,130	1,432	3,562	3,562	118	lock-box in pass. car.; no r. a.	7	50 00		340
1,430	2,285	3,715	3,411	113	b. c.; no r. a	6	50 00		341
								Vacant	342
2,442	1,900	4,342	3,313	110	9.3 by 7, f. f, no r. a	6	50 00	In March, 1876	343
1,131	2,441	3,572	3,199	106	in b. c., no r. a	6	50 00	In April, 1875	344
1,559	1,775	3,334	3,191	106	8.2 by 7, fixtures, s. l	6	50 00		345
4,039	2,323	6,362	3,182	105	11 by 3.10, f. f., s. l	6	50 00	In December, 1875	346
1,696	1,460	3,156	3,156	105	no r. a	6	50 00	Branch; main route $50, (213.)	347
3,560	3,336	6,896	3,077	102	12 by 7, f. f., s. l	6	50 00	In June, 1876. Co.'s return.	348
2,366	1,448	3,814	3,071	102	7.3 by 6, fixtures, § l	4	50 00	In October, 1875	349

E.—*Table showing the weight of the mails, the speed with which they*

Order.	State.	Number of route.	New number of route.	Termini.	Corporate title of company carrying the mail.	Length of route.	Miles per hour.
						Miles.	
350	Ga....	6007	15008	Kingston, Rome.....	Rome.....	20.35	18
351	Cal ...	46015	.....	Elmira, Winters.....	Vaca Valley.....	18	20
352	S. C...	14003	14003	Kingsville, Camden.....	South Carolina.....	39.25	13
353	Md ..	3520	10019	Emmittsburgh, Rocky Ridge	Emmittsburgh.....	7	21
354	Ohio ..	9031	2102	Xenia, Springfield	Pittsburgh, Cincinnati and Saint Louis.	19	20
355	Ohio ..	9054	21050	Athens, Scott's Landing	Marietta and Cincinnati	37	12
356	Ala ...	6611	17011	Gainesville, Gainesville Junction.	Mobile and Ohio	22	11
357	Ga....	15015	15015	Eatonton, Milledgeville.....	Central Railroad and Banking Company.	22½	12½
358	Ala ...	17016	17016	Opelika, Goodwater	Savannah and Memphis	59.65	15
359	Ala ...	17005	17005	Tuscumbia, Florence	Memphis and Charleston.....	6.5	15
360	Tenn .	19003	19003	Rogersville, Bull's Gap	W. P. Elliott, proprietor Rogersville and Jefferson Railroad.	15	16
361	Ga....	6005	15006	Washington, Double Wells	Georgia	18.85	25
362	Ill	23032	.....	McLeansborough, Shawneetown.	Saint Louis and Southeastern	41.25	12
363	Ohio ..	9052	21048	Dyson's, Cumberland.....	W. H. and C. B. Stevens, proprietors Eastern Ohio Railroad.	7.8	15
364	N. J ..	2123	7014	Dover, Chester.....	Morris and Essex.....	10	20
365	.....	.....	.....	.....	.....	.....	.....
366	Mass..	754	.....	New Bedford, Fall River....	Fall River	15	25
367	Ala ...	17019	17019	Chehaw, Tuskegee	Tuskegee.....	6	12
368	Mass..	753	.....	Ashburnham Depot, Ashburnham.	Ashburnham	2.89	15
369	Ala ...	17021	17021	Eufaula, Clayton.....	Vicksburgh and Brunswick...	22.5	22
370	W. Va.	12005	.....	Ritchie Court-House, Pennsborough.	Pennsborough and Harrisville	9	12
371	Ga....	15017	15017	Fort Valley, Perry	Southwestern.....	13.32	13
372	Ga....	6088	15017	.....do	.....do	13.32	15
373	Ala ...	17020	17020	Atalla, Gadsden	East Alabama and Cincinnati.	6	10
374	Mass..	617	.....	Grafton, Millbury.....	Boston and Albany	4	22
375	Pa	2493	8090	Phillipsburgh, Morrisdale Mines.	Pennsylvania.....	3.69	20
376	N. C ..	13011	13011	Sanford, Egypt Depot.....	Western.....	6	15
377	Miss ..	7007	18007	Muldon, Aberdeen	Mobile and Ohio	9	9
378	Pa	2492	8089	Antestown, Lloydville	Bell's Gap	8.82	12
379	N. J...	2124	7027	Newark, Mont Clair	Newark and Bloomfield.....	5.67	25
380	Vt	528	.....	Wells River, Montpelier	Montpelier and Wells River ..	38.62	21
381	N. C ..	13009	13009	Charlotte, Statesville	Atlantic, Tennessee and Ohio .	49.38	15
382	Ill	23054	.....	Chicago, Byron	Chicago and Pacific.....	92.75	20
383	Pa	2461	8061	Towanda, Bernice.....	Sullivan and Erie Coal and Railroad Company.	29.32	14
384	Ala ...	17011	17011	Gainesville, Gainesville Junction.	Mobile and Ohio	22	8½
385	Pa	2494	8091	Reading, Slatington	Philadelphia and Reading Railroad Company, (lessees Berks County Railroad.)	43.32	18.5
386	Pa	2489	8086	Hollidaysburgh, Royer.....	Pennsylvania	21.25	14
387	Pa	2495*a*	8093	Larabee's, Clermont	McKean and Buffalo	23.3	15
388	N. Y..	1802	.....	Quaker Street, Schenectady.	Delaware and Hudson Canal Company.	15	30
389	N. Y..	1803	.....	Nineveh Junction, Jefferson Junction.	.....do	21	33
390	Ark ..	7525*a*	29003	Chicot, Pine Bluff.....	Texas, Mississippi River and Northwestern.	72.78	12
391	Ga....	15024	15024	Columbus, Hamilton	North and South.....	23.51	15
392	Ohio ..	9010	21009	Oneida Mills, Carrollton.....	Ohio and Toledo	12	15
393	Ill	11913	23036	Aurora, Foreston	Chicago and Iowa.....	81.64	21
394	Ohio ..	9050	21046	Painesville, Youngstown....	Painesville and Youngstown..	60.12	18

are conveyed, the accommodations for mails and agents, &c.—Continued.

Whole weight carried any distance for thirty days.			Average weight carried whole distance.		Size, &c., of mail-car or apartment.	Trips per week.	Pay per mile per annum.	Remarks.	Order.
Outward.	Inward.	Total.	30 days, total.	Per day, total.					
Lbs.	*Lbs.*	*Lbs.*	*Lbs.*	*Lbs.*	*Feet and inches.*				
1,643	1,426	3,069	3,069	102	b. c.; no r. a	7	$50 00	In October, 1875	350
2,786	1,753	4,539	3,024	100	in b. c.; no r. a	7	50 00	In August, 1876	351
2,289	1,078	3,367	2,972	99	in charge of conductor	6	50 00	Branch; main route $70, (188.)	352
1,139	1,747	2,886	2,886	96	in express-car	12	50 00	In January, 1876	353
2,332	1,893	4,225	2,677	89	in charge baggage-master	12	50 00	Part; res. $210. (41)	354
3,372	2,903	6,275	2,674	89	14.6 by 9.6, f. f., s. l	6	50 00		355
1,183	1,710	2,893	2,623	87	in b. c.; no r. a	7	50 00	In October, 1875	356
921	1,823	2,744	2,572	85	8.2 by 7, fixtures, s. l	6	50 00		357
3,693	2,445	6,138	2,326	77	8.2 by 7, f. f., s. l	6	50 00	In March, 1876. 12.37 m. at $40.	358
1,447	758	2,205	2,205	73	b. c.; no r. a	7	50 00	Branch; main route $160, (69.)	359
899	1,726	2,625	2,156	71	b. c.; no r. a	6	50 00	In July, 1876	360
1,254	2,357	3,611	2,128	70	no r. a	6	50 00	In October, 1875	361
2,446	1,348	3,794	1,876	62	12 by 6.6, f. f., s. l	6	50 00	Branch; main route $110, (112.)	362
1,298	813	2,111	1,872	62	6 by 4, f. f.; no r. a	12	50 00	In July, 1876	363
1,392	829	2,221	1,861	62	no apt.; no r. a	9*	50 00	In July, 1874; reported November, 1875.	364
								Vacant	365
1,012	1,071	2,083	1,820	60	in b. c	18	50 00	In March, 1876.	366
1,005	709	1,714	1,714	57	no apt.; no r. a	14	50 00		367
1,151	560	1,711	1,711	57	do	12	50 00	In March, 1876	368
1,730	1,187	2,917	2,702	54	3 by 4, s. l	6	50 00	50 days, 20 from March 15 and 30 from May 15, 1876.	369
778	918	1,696	1,628	54	10 by 7.4; no r. a	12	50 00	In May, 1876	370
949	565	1,514	1,514	50	closet, 3 by 4; no r. a	6	50 00	In March, 1876	371
963	532	1,495	1,495	49	3 by 4; no r. a	6	50 00	In October, 1875	372
266	495	761	761	25	12 by 9.6, f. f., s. l	6	50 00		373
459	289	748	748	24	in b. c	9*	50 00	In March 1876	374
439	253	692	692	23	b. c.; no r. a	6	50 00	In August, 1875	375
162	283	445	445	15	10.9 by 5.9, f. f. In charge of conductor.	6	50 00	Branch; main route $50, (338.)	376
197	137	334	334	11	in b. c.; no r. a.	14	50 00	In October, 1875	377
179	152	331	331	11	7 by 6.6; no r. a	6	50 00	In August, 1875	378
4,329	1,929	6,258	4,738	157	no apt.; no. r. a	12	48 60	In July, 1874; reported November 1, 1875.	379
8,696	10,702	19,308	13,304	443	12 by 6.10, f. f., s. l	6	45 00	In January, 1876	380
3,487	2,223	5,710	3,275	109	9 by 8, f. f., s. l	6	45 00		381
6,887	4,403	11,290	2,914	97	22.6 by 10, f. f., s. l	6	45 00	In January, 1876	382
3,827	1,997	5,824	2,888	96	8.3 by 7.3, fixtures, s. l	6	45 00		383
1,176	1,671	2,847	2,591	86	in b. c.; no r. a	7	45 00		384
4,231	3,161	7,392	2,447	81	6.9 by 5.2, f. f., s. l	6	45 00	In August, 1875	385
2,681	1,939	4,620	2,442	81	b. c.; no r. a	9.8*	45 00	do	386
2,403	1,280	3,683	1,846	61	8 by 5.6, (average,) fixtures, s. l.	6	45 00		387
2,705	2,140	4,845	3,436	57	no apt	6	45 00	60 days, in May and August, 1875.	388
1,273	1,331	2,604	1,572	52	7 by 7, s. l.	6	45 00	In May, 1875	389
810	1,247	2,057	1,222	40	8 by 6, f. f., s. l	3	45 00	In March, 1875	390
855	614	1,469	1,151	38	16 by 7; no r. a	6	45 00		391
1,492	746	2,238	2,238	74	12 by 10; no r. a	6	41 66		392
22,872	10,464	33,336	23,510	783	38 by 9.8, f. f. c., s. l	12	40 00	In March, 1875	393
9,189	5,471	14,660	6,894	229	12 by 6, f. f., s. l	6	40 00		394

E.—*Table showing the weight of the mails, the speed with which they*

Order.	State.	Number of route.	New number of route.	Termini.	Corporate title of company carrying the mails.	Length of route.	Miles per hour.
						Miles.	
395	Ind...	22011	22011	Cambridge City, Columbus..	Jeffersonville, Madison and Indianapolis.	68	20
396	Ill....	23029	.....	Urbana, Havana	Indianapolis, Bloomington and Western.	102.70	20
397	S. C...	14009	14009	Anderson Court-House, Walhalla.	Greenville and Columbia	35.06	15
398	Tenn .	19011	19011	Knoxville, Caryville	Knoxville and Ohio	38.94	12
399	Ill....	23029	.....	White Heath, Decatur	Indianapolis, Bloomington and Western.	32.35	12
400	Ky....	20006	20006	Bardstown Junction, Bardstown.	Louisville and Nashville.....	17.3	14
401	Ind...	22032	22033	Frankfort, Kokomo	Frankfort and Kokomo	25.5	20
401*a*	Ala...	17017	17017	Selma, Pine Apple	Selma and Gulf	43.19	10
402	N. J...	2118	7010	Greensburgh Station, New Brunswick.	Pennsylvania	29.13	25
403	Miss..	18008	18008	Middleton Station, Ripley...	Ripley	24.3	17
404	Tenn .	19012	19012	Morristown, Wolf Creek....	East Tennessee, Virginia and Georgia, (late Cincinnati, Cumberland Gap and Charleston.)	39.8	9
405	N. C ..	5213	13009	Charlotte, Statesville.....	Atlantic, Tennessee and Ohio .	49.38	15
406	Miss..	18009	18009	Durant, Kosciusko.....	New Orleans, Saint Louis and Chicago, (operating Mississippi Central.)	21.57	11
407	Miss..	7009	18009	.....do	.....do	21.57	12
408	N. J ..	2120	7024	New Bridge, Stony Point ...	New Jersey and New York...	27.18	25
409	Minn .	26017	.....	Mankato, Wells.....	Central, of Minnesota.....	41.06	15
410	Ga....	15016	15016	Cuthbert, Fort Gaines	Southwestern.....	22.67	16
411	Tenn .	19014	19014	Memphis, Covington	Paducah and Memphis.....	38.31	18¾
412	Pa....	2496	.....	York, Muddy Creek Forks..	Peach Bottom	22.09	12
413	Ala...	17014	17014	Opelika, Buffalo.....	East Alabama and Cincinnati	22.5	18
414	Ga....	6012	15013	Cochran, Hawkinsville.....	Macon and Brunswick	10	24
415	Ohio ..	9040	21036	Logansport, New Straitsville.	Columbus and Hocking Valley	13.02	12
416	Pa...	2485	8082	Mechanicsburgh, Dillsburgh	Cumberland Valley	8.85	15
417	Ark ..	7645*a*	29004	Chicot, Monticello	Texas, Mississippi River and Northwestern.	44.28	5
418	Ohio ..	9043	21039	Clinton, Massillon	Cleveland, Mount Vernon and Delaware.	13.7	.....
419	Ga....	15013	15013	Cochran, Hawkinsville.....	Macon and Brunswick	10	16
420	Ga....	15019	15019	Barnesville, Thomaston	Central Railroad and Banking Company.	17.25	12
421	Ind...	22030	22031	Attica, Veedersburgh	Indiana North and South	14	15
422	Pa....	2498	8096	Oxford, Goshen	Peach Bottom	16.75	14
423	Ky ...	20014	20014	Willard, Greenup	Eastern Kentucky	34.5	15
424	Md ...	3519	10018	Lake Roland, Western Maryland Railroad Junction ...	Northern Central	8.5	17
425	Miss..	18007	18007	Muldon, Aberdeen	Mobile and Ohio	9	9
426	Ind...	22022	22023	Princeton, Albion.....	Louisville, New Albany and Saint Louis Air Line.	31.03	16
427	Ind...	22029	22030	Terre Haute, Martz.....	Cincinnati and Terre Haute...	26.15	18
428	Ind...	22033	22034	Rockport, Huntingburgh....	Cincinnati, Rockport and Southwestern.	31.02	15
429	Ga....	15016	15016	Albany, Arlington	Southwestern.....	35.5	14
430	Kans .	33014	.....	Fort Scott, Memphis	Fort Scott, Southeastern and Memphis.	6.52	12
431	Mo ...	28031	.....	Saint Louis, Normandy.....	West End Narrow Gauge.....	10.53	15
432	Ga....	6146	15022	Griffin, Carrollton.....	Savannah, Griffin and North Alabama.	59.86	12
433	S. C...	5602	14001	Cokesbury, Abbeville Court House.	Greenville and Columbia.....	11.81	15
434	S. C..	5602	14001	Belton, Anderson Court-House.	.....do	10.01	15

are conveyed, the accommodations for mails and agents, &c.—Continued.

Whole weight carried any distance for thirty days.			Average weight carried whole distance.		Size, &c., of mail-car or apartment.	Trips per week.	Pay per mile per annum.	Remarks.	Order.
Outward.	Inward.	Total.	30 days, total.	Per day, total.					
Lbs.	*Lbs.*	*Lbs.*	*Lbs.*	*Lbs.*	*Feet and inches.*				
7,130	5,497	12,627	4,880	162	11 by 6, f. f., s. l	6	$40 00		395
7,756	7,699	15,455	4,338	144	10 by 7, furniture, s. l	6	40 00	In November, 1875. Main route; branch $40, (399.)	396
3,109	2,783	5,892	4,017	133	12 by 8, f. f	6	40 00		397
3,093	2,181	5,274	3,637	121	6.2 by 3, fixtures, s. l	6	40 00		398
2,686	3,238	5,924	3,636	121	8 by 4, furniture, s. l	6	40 00	Branch; main route $40, (396.) In November, 1875.	399
2,947	1,805	4,752	3,434	114	b. c.; no r. a	7	40 00		400
2,566	2,728	5,294	3,389	112	10.10 by 7.2, f. f., s. l	12	40 00		401
4,276	2,388	6,664	5,330	110	7.3 by 6, f. f., ½ l	4	40 00	48 days, 18 from March 15 and 30 from May 15, 1876.	401
4,045	3,591	7,636	3,206	106	in b. c.; no r. a	6	40 00	In October, 1875	402
2,150	1,902	4,052	2,881	96	in b. c.; no r. a	6	40 00		403
2,239	2,971	5,210	2,822	94	12 by 7, f. f., s. l	6	40 00		404
2,439	3,384	5,823	2,697	89	9 by 8, f. f., s. l	6	40 00	In October, 1875	405
1,891	884	2,775	2,531	81	in b. c.; no r. a	6	40 00	In March, 1876	406
1,623	1,106	2,729	2,527	84	b. c.; no r. a	6	40 00	In October, 1875	407
3,515	2,109	5,624	2,500	83	do	6	40 00	In March, 1876	408
1,882	1,637	3,479	2,485	83	8.3 by 7, f. f., s. l	6	40 00	In October, 1875	409
1,867	884	2,751	2,429	80	closet, 3 by 4; no r. a	6	40 00	Branch; main route $70, (187.)	410
2,847	2,082	4,929	2,281	76	8.6 by 6.6, f. f., s. l	6	40 00		411
			2,260	75	b. c.; no r. a	7½*	40 00	In September, 1875	412
1,707	1,153	2,860	2,188	72	8 by 4, f. f., s. l	6	40 00		413
1,244	944	2,188	2,188	72	no r. a	6	40 00	Branch; main route $50, (254.) In October, 1875.	414
1,229	990	2,219	1,886	62	in b. c.; no r. a	15*	40 00	Branch; main route $87.50, (151.)	415
1,022	822	1,844	1,740	58	locked box in b. c	6	40 00	In August, 1875	416
1,428	835	2,263	1,724	57	no r. a	2	40 00	In March, 1875	417
1,192	1,090	2,282	1,688	56			40 00		418
974	706	1,680	1,680	56	13 by 8.6, fixtures; no r. a	6	40 00	Branch; main route $65, (192.)	419
1,020	743	1,763	1,531	51	closet 3 by 4; no r. a	6	40 00		420
1,022	1,114	2,136	1,292	43	in b. c	6	40 00		421
976	691	1,667	1,092	36	b. c.; no r. a	6	40 00	In January, 1876	422
1,169	1,921	3,090	997	33	10 by 4.6, f. f., s. l	6	40 00		423
496	335	831	703	23	in b. c.; no r. a	6	40 00		424
138	151	289	289	9	in b. c.; no r. a	7	40 00	In March, 1876	425
1,985	1,130	3,115	1,740	58	r. a. in caboose-car, f. f., s. l	6	35 00		426
2,154	1,427	3,581	1,681	56	no apt., s. l	6	35 00		427
1,518	1,053	2,571	1,441	48	10 by 8; in charge of conductor.	6	35 00		428
1,028	707	1,735	1,158	38	closet 3 by 4; no r. a	5*	35 00	Branch; main route $70, (187.)	429
725	261	986	986	32	in b. c	6	35 00	In March, 1876	430
594	394	918	788	27	in b. c.; no r. a	6	35 00	In May, 1876	431
3,119	3,626	6,745	3,230	107	8.6 by 4.6, f. f., s. l	6	30 00	In December, 1875	432
1,406	1,720	3,126	3,126	104	in charge of conductor	6	30 00	Branch; main route $75, (182.)	433
1,081	1,803	2,884	2,884	96	12 by 7, f. f., s. l	6	30 00	In October, 1875. Branch; main route $75, (182.)	434

E.—*Table showing the weight of the mails, the speed with which they*

Order.	State.	Number of route.	New number of route.	Termini.	Corporate title of company carrying the mail.	Length of route.	Miles per hour.
						Miles.	
435	Ala...	17005	17005	Moscow, Somerville.....	Memphis and Charleston.....	14.5	18
436	Ala...	6614	17014	Opelika, Buffalo.....	East Alabama and Cincinnati.	22.50	20
437	Ala...	17018	17018	Mobile, Bigbee Bridge	Mobile and Alabama Grand Trunk.	59.7	15
438	Ga....	15023	15023	Brunswick, Albany	Brunswick and Albany	173.31	14¼
439	Tenn .	19015	19015	Jasper, Bridgeport.....	Nashville and Chattanooga....	12	10
440	Ga....	15020	15020	Cartersville, Rock Mart.....	Cherokee	22.08	12
441	Ky ...	20001	20001	Ashland, Geigersville	Lexington and Big Sandy.....	13.98	12
442	Fla ...	16002	16002	Tallahassee, Saint Mark's...	Jacksonville, Pensacola and Mobile.	21.89	16
443	Fla ...	16005	16005	Pensacola, Millview.....	Pensacola and Perdido.....	10¼	12
444	Pa....	2499	8097	Pittsburgh, Castle Shannon .	Pittsburgh and Castle Shannon	7	12
445	Ky ...	9605	20001	Ashland, Coalton	Lexington and Big Sandy.....	11	12
446	N. C ..	5216	13011	Sanford, Egypt Depot.....	Western.....	7	.....
447	La....	8003	30005	Baton Rouge, Livonia.....	Baton Rouge, Grosse Tête and Opelousas.	28	10

are conveyed, the accommodations for mails and agents, &c.—Continued.

Whole weight carried any distance for thirty days.			Average weight carried whole distance.		Size, &c., of mail-car or apartment.	Trips per week.	Pay per mile per annum.	Remarks.	Order.
Outward.	Inward.	Total.	30 days, total.	Per day, total.					
Lbs.	*Lbs.*	*Lbs.*	*Lbs.*	*Lbs.*	*Feet and inches.*				
1,358	914	2,272	2,272	75	in b. c.; no r. a	7	$30 00	Branch; main route $160, (69.)	435
1,433	817	2,250	1,635	54	8 by 4, f. f., a. l	6	30 00	In October, 1875	436
1,288	938	2,226	1,648	54	in passenger-car; no r. a	6	30 00		437
3,361	3,354	6,715	1,089	36	12 by 8.6, f. f., ½ l	3	30 00		438
453	827	1,280	1,108	36	in charge of baggage-master.	6	30 00		439
933	619	1,552	1,053	35	5 by 3, in b. c.; no r. a	6	30 00		440
443	194	637	637	21	locked box, 2.6 by 1.6; no r. a.	6	30 00		441
452	581	1,033	1,033	17	no apt.; in charge of conductor.	3	30 00	Branch; main route $90, (146.) 60 days, half from Nov. 15, 1875, and residue from Jan. 1, 1876.	442
298	200	498	498	16	in passenger-car; no r. a	6	30 00		443
352	303	655	475	15	no r. a	6	30 00		444
645	379	1,024	1,024	34	locked box; no r. a	6	29 54	In April, 1875	445
290	411	701	701	23	no r. a	6	21 00	Branch; main route $50, (335.) In August, 1875.	446
211	180	391	321	10	in passenger-car	3	12 86	In September, 1875	447

THOMAS J. BRADY,
Second Assistant Postmaster-General.

Index to Table E.

Title.	Order.	Number of route.	New number of route.
Adirondack	186	1804	.....
Alabama Central	224	17009	17009
Arkansas Valley	205	38005	.....
Ashburnham	368	753	.....
Atchison and Nebraska	203	33009	.....
Atchison, Topeka and Santa Fé	167	33013	.....
Atlanta and Richmond Air Line	131	15001	15001
Atlanta and West Point	98	6003	15003
Atlantic and Great Western	123	9006	21005
Do	129	9006	21005
Do	144	9023	21034
Do	252	9006	21005
Do	281	9041	21037
Atlantic and Gulf	104	15009	15009
Do	124	6008	15009
Do	201	15018	15018
Do	217	15009	15009
Do	258	6016	15018
Do	268	6008	15009
Atlantic and North Carolina	226	13005	13005
Atlantic, Gulf and West India Transit Company	325	16001	16001
Atlantic, Tennessee and Ohio	381	13009	13009
Do	405	5213	13009
Baltimore and Ohio	14	3503	.....
Do	15	3503	.....
Do	18	3504	10003
Do	19	12002	.....
Do., (operating Baltimore, Pittsburgh and Chicago)	34	9051	21047
Do.....do	51	9051	21047
Do., (lessees Sandusky, Mansfield and Newark)	74	9011	21010
Do	75	9011	21010
Do	76	9011	21010
Do	78	9011	21010
Do	79	9011	21010
Do	80	9011	21010
Baltimore and Potomac	20	3514	10013
Do	118	3514	.....
Do	119	3514	.....
Baltimore, Pittsburgh and Chicago. (See Baltimore and Ohio.)			
Bath and Hammondsport	323	1810	.....
Baton Rouge, Grosse Tête and Opelousas	447	8003	30005
Bell's Gap	378	2492	8089
Berks County. (See Pennsylvania.)			
Boston and Albany, (lessees North Brookfield Railroad)	328	755	.....
Boston and Albany	374	617	.....
Breakwater and Frankford	290	3406	9506
Brunswick and Albany	438	15023	15023
Buffalo and Jamestown	198	1290	.....
Cairo and Saint Louis	271	23053	.....
Carolina Central	227	13003	13003
Do	315	13008	13008
Cayuga	257	1284	.....
Central, of Minnesota	409	26017	.....
Central, of New Jersey	23	2101	7001
Do	190	2258	7003
Central Ohio	25	9001	21001
Do	26	9001	21001
Do	27	9001	21001
Central Pacific	35	46001	.....
Central Railroad and Banking Company	111	15012	15012
Do	160	15010	15010
Do	164	15005	15005
Do	345	15014	15014
Do	357	15015	15015
Do	420	15019	15019
Charlotte, Columbia and Augusta	101	13007	1300[illegible]
Cheraw and Darlington	236	14006	1400[illegible]
Do	280	5608	1400[illegible]
Cherokee	440	15020	1502[illegible]
Chester and Lenoir Narrow Gauge, (late King's Mountain)	324	5609	1400[illegible]
Do	343	14007	1400[illegible]
Chicago and Canada Southern	311	24036	.....
Chicago and Pacific	382	23054	.....
Chicago and Iowa	141	11913	230[illegible]
Do	393	11913	230[illegible]
Chicago and Paducah	313	23043	.....
Chicago, Burlington and Quincy	53	23010	.....
Do	54	23010	.....
Do	159	27011	.....
Do	161	27011	.....
Chicago, Cincinnati and Louisville	225	22014	22015
Chicago, Rock Island and Pacific	291	27016	.....
Chippewa Falls and Western	298	25026	.....
Cincinnati and Martinsville	331	22015	22016
Cincinnati and Terre Haute	427	22029	22030
Cincinnati, Cumberland Gap and Charleston. (See East Tennessee, Virginia and Georgia.)			
Cincinnati, Hamilton and Dayton	55	9030	21026
Do	56	9030	21026
Do	83	9030	21026
Cincinnati, Hamilton and Indianapolis	256	9028	21024
Do	294	9028	21024
Cincinnati, La Fayette and Chicago	28	22028	22029
Cincinnati, Richmond and Chicago	106	9029	21025
Cincinnati, Richmond and Fort Wayne. (See Grand Rapids and Indiana.)			
Cincinnati, Rockport and Southwestern	428	22033	22034
Cincinnati, Sandusky and Cleveland	136	9013	21012
Do	150	9013	21012
Do	239	9037	21033
Do	285	9037	21033
Do	344	9025	21021
Cincinnati, Wabash and Michigan	318	22021	22022
Cleveland and Pittsburgh	77	9007	21006
Do	121	9003	21003
Do	264	9009	21008
Cleveland, Columbus, Cincinnati and Indianapolis	33	9046	21042
Do	58	9018	21016
Do	105	9015	21013
Cleveland, Mount Vernon and Delaware	107	9005	21004
Do	418	9043	21039
Cleveland, Tuscarawas Valley and Wheeling, (late Lake Shore and Tuscarawas Valley)	249	9045	21041
Columbus and Hocking Valley	151	9040	21036
Do	415	9040	21036
Columbus and Xenia	42	9016	21014
Columbus, Chicago and Indiana Central	67	9017	21015
Consolidated European and North American	147	244	.....
Cumberland and Pennsylvania	314	3512	10011
Cumberland Valley	416	2485	8052
Dayton and Michigan	85	9027	21023
Dayton and Union	207	9026	21022
Delaware and Hudson Canal Co	81	1222	.....
Do	84	1221	.....

Index to Table E—Continued.

Title.	Order.	Number of route.	New number of route.
Delaware and Hudson Canal Co.	86	1220	.....
Do	88	1224	.....
Do	95	1224	.....
Do	116	1224	.....
Do	132	1245	.....
Do	153	1224	.....
Do	286	1223	.....
Do	295	1244	.....
Do	388	1802	.....
Do	389	1803	.....
Delaware, Lackawanna and Western	246	2122	7028
Do...(See Newark and Bloomfield.)			
Detroit, Eel River and Illinois	240	22026	22027
East Alabama and Cincinnati	373	17020	17020
Do	413	17014	17014
Do	436	6614	17014
East Tennessee, Virginia and Georgia	32	19002	19002
Do	120	19002	19002
Do	404	19012	19012
Eastern Kentucky	423	20014	20014
Eastern Ohio. (See W. H. and C. B. Stevens.)			
Elliott, W. P., proprietor, Rogersville and Jefferson Railroad	360	19003	19003
Emmittsburgh	353	3520	10019
Erie	2	1201	.....
Do	17	1208	.....
Erie and Pittsburgh	157	2445	8045
Evansville and Crawfordsville	127	22012	22012
Evansville, Owensborough and Nashville	301	20015	20015
Evansville, Terre Haute and Chicago	231	22023	22024
Do	275	22023	22024
Fall River	366	754	.....
Flushing, North Side and Central	221	1296	.....
Do	309	1296	.....
Do	320	1296	.....
Fort Wayne, Jackson and Saginaw	223	24008	.....
Do	243	24008	.....
Fort Wayne, Muncie and Cincinnati	214	22019	22020
Fort Scott, Southeastern and Memphis	430	33014	.....
Frankfort and Kokomo	401	22032	22033
Galena and Southern Wisconsin	329	25025	.....
Georgia	89	15004	15004
Do	100	6001	15004
Do	177	6006	15007
Do	196	6006	15007
Do	341	6005	15006
Do	361	6005	15006
Gilman, Clinton and Springfield	316	23034	.....
Grand Gulf and Port Gibson	184	18006	18006
Grand Rapids and Indiana	253	22020	22021
Do	261	22020	22021
Grand Rapids, Newaygo and Lake Shore	348	24026	.....
Greenville and Columbia	182	5602	14001
Do	213	14001	14001
Do	302	14001	14001
Do	347	14001	14001
Do	397	14009	14009
Do	433	5602	14001
Do	434	5602	14001
Hannibal and Saint Joseph	128	28030	.....
Hickerson, L. D., and Anderson Powers, of Memphis and Charleston Railroad, lessees	337	19005	19005
Houston and Texas Central	73	31003	.....
Do	130	31004	.....
Do	169	31005*a*	.....
Hudson and Boston	330	1261	.....
Illinois Midland	310	23048	.....
Indiana, North and South	421	22030	22031
Indianapolis and Saint Louis	59	23028	.....
Do	63	23028	23028
Indianapolis and Vincennes	255	22001	22001
Indianapolis, Bloomington and Western	396	23029	.....
Do	399	23029	.....
Indianapolis, Cincinnati and La Fayette	24	22003	22003
Do	29	22005	22005
Indianapolis, Peru and Chicago	138	22004	22004
Do	304	22025	22026
Jacksonville, Pensacola and Mobile	146	16002	16002
Do	442	16002	16002
Jeffersonville, Madison and Indianapolis	94	22007	22007
Do	259	22006	22006
Do	395	22011	22011
Kent County	183	3513	10012
Kentucky Central	113	20002	20002
Do	114	20002	20002
Do	175	20002	20002
King's Mountain. (See Chester and Lenoir Narrow-Gauge.)			
Knoxville and Ohio	398	19011	19011
Lake Erie and Louisville	277	9024	21020
Lake Erie, Evansville and Southwestern	334	22031	22032
Lake Shore and Michigan Southern	1	9008	21007
Do	4	9049	21045
Do	5	1241	.....
Do	9	1241	.....
Do	10	1241	.....
Do	11	1241	.....
Lexington and Big Sandy	441	9605	20001
Do	445	9605	20001
Little Rock and Fort Smith	154	29005	.....
Logansport, Crawfordsville and Southwestern	279	22027	22028
Do	297	22012*a*	22013
Long Island	232	1806	.....
Do	265	1234	.....
Louisville and Nashville	31	20005	20005
Do	57	20008	20008
Do	60	19009	19009
Do	64	19010	19010
Do	93	19010	19010
Do	148	19006	19006
Do	228	20007	20007
Do	229	20007	20007
Do	234	20007	20007
Do	260	20007	20007
Do	312	20012	20012
Do	400	20006	20006
Louisville, Cincinnati and Lexington	52	20004	20004
Do	61	20018	20018
Do	143	20003	20003
Do	244	20013	20013
Do	274	20017	20017
Do	289	9796*a*	20013
Louisville, New Albany and Chicago	250	22008	22008
Louisville, New Albany and Saint Louis Air Line	426	22022	22023
McKean and Buffalo	387	2495*a*	8093
Macon and Augusta	230	15021	15021
Macon and Brunswick	192	15013	15013
Do	254	6012	15013
Do	414	6012	15013
Do	419	6012	15013
Macon and Western	126	6011	15012
Marietta and Cincinnati	16	9032	21028

Index to Table E—Continued.

Title.	Order.	Number of route.	New number of route.
Marietta and Cincinnati	70	9020	21018
Do	156	9019	21017
Do	251	9053	21049
Do	355	9054	21050
Maryland and Delaware	238	3403	9503
Maysville and Lexington	210	20016	20016
Memphis and Charleston	69	17005	17005
Do	359	17005	17005
Do	435	17005	17005
Do., (See L. D. Hickerson and Anderson Powers.)			
Mississippi and Tennessee	163	7002	18002
Do	191	18002	18002
Mississippi Central. (See New Orleans, Saint Louis and Chicago.)			
Missouri, Kansas and Texas	37	28011	.....
Do	39	28014	.....
Do	212	33006	.....
Mobile and Alabama Grand Trunk	437	17018	17018
Mobile and Girard	272	17008	17008
Mobile and Montgomery	82	17012	17012
Mobile and Ohio	103	7004	18004
Do	155	7004	18004
Do	208	7004	18004
Do	292	18004	18004
Do	356	6611	17011
Do	377	7007	18007
Do	384	17011	17011
Do	425	18007	18007
Montgomery and Eufaula	283	17003	17003
Do	305	6603	17003
Montpelier and Wells River	380	528	.....
Morris and Essex	122	2106	7013
Do	125	2106	7013
Do	263	2106	7013
Do	364	2123	7014
Nashville and Chattanooga	46	19004	19004
Do	48	19004	19004
Do	90	19004	19004
Do	91	19004	19004
Do	92	19004	19004
Do	165	19007	19007
Do	307	19004	19004
Do	439	19015	19015
Newark and Bloomfield	379	2124	7027
Newark, Somerset, and Straitsville	185	9042	21038
New Castle and Franklin	346	2500	8098
New Jersey and New York	408	2120	7024
New Orleans, Mobile and Texas	96	17013	17013
New Orleans, Saint Louis and Chicago	62	18001	18001
Do	406	18009	18009
Do., (operating Mississippi Central)	407	7009	18009
Newport and Wickford Railroad and Steamboat Company	215	825	.....
New York Central and Hudson River	6	1217	.....
Do	7	1211	.....
Do	8	1211	.....
Do	242	1811	.....
North and South	391	15024	15024
Northeastern	102	5607	14005
Do	108	14005	14005
Northern Central	87	1255	.....
Do	424	3519	10018
North Pacific Coast	317	46016	.....
Northwestern, (North Carolina)	270	13012	13012
Ohio and Mississippi	30	22010	22010
Do	65	22018	22019
Ohio and Toledo	392	9010	21009
Oregon Central	339	44002	.....
Paducah and Memphis	321	20009	20009
Do	411	19014	19014
Painesville and Youngstown	394	9050	21046
Paris and Danville	284	23050	.....
Peach Bottom	326	2496	8094
Do	412	2496	.....
Do	422	2498	8096
Pennsborough and Harrisville	370	12005	12005
Pennsylvania	3	2103	7004
Do	12	2401	.....
Do	13	2401	8001
Do	149	2103	7004
Do	332	2433	8033
Do	375	2493	8090
Do	386	2489	8086
Pennsylvania Company	204	9047	21043
Do	319	9048	21044
Pensacola and Louisville	262	16003	16003
Pensacola and Perdido	443	16005	16005
Peoria, Pekin, and Jacksonville	180	23038	.....
Petersburgh	50	4410	11009
Philadelphia and Reading, (lessees Berks County Railroad)	381	2494	8091
Pittsburgh and Castle Shannon	444	2499	8097
Pittsburgh, Cincinnati, and Saint Louis	36	9036	21032
Do., (Little Miami division)	41	9031	21027
Do	142	9012	21011
Do	166	22013	22014
Do	168	22009	22009
Do	178	9033	21029
Do	193	9034	21030
Do	266	22016	22017
Do	306	9036	21032
Do	354	9031	21027
Pittsburgh, Fort Wayne and Chicago	22	9002	.....
Do	38	9002	21002
Do	43	9002	.....
Do	44	9002	21002
Do	237	9039	21035
Do	245	2429	8029
Do	282	9039	.....
Portland and Ogdensburgh	99	410	.....
Port Royal	267	14010	14010
Raleigh and Augusta Air Line	235	13010	13010
Raleigh and Gaston	176	13001	13001
Reading and Columbia	276	2431	8031
Do	322	2431	8031
Rhinebeck and Connecticut	300	1812	.....
Richmond and Danville	68	13004	13004
Do	97	4407	13004
Do	173	13004	13004
Richmond and Petersburgh	40	4409	11008
Ripley	403	18008	18008
Rogersville and Jefferson. (See W. P. Elliott.)			
Rome	340	6007	15008
Do	350	6007	15008
Rome, Watertown and Ogdensburgh	273	1287	.....
Saint John's	327	16004	16004
Saint Louis and Southeastern	109	19008	19008
Do	112	23032	.....
Do	115	20010	20010
Do	362	23032	.....
Saint Louis, Lawrence and Western	216	28016	.....
Saint Louis, Rock Island and Chicago	195	23005	.....
San Francisco and North Pacific	248	46011	.....
Savannah and Charleston	110	14004	14004
Savannah and Memphis	358	17016	17016

Index to Table E—Continued.

Title.	Order.	Number of route.	New number of route.
Savannah, Griffin and North Alabama	432	6146	15022
Seaboard and Roanoke	181	4415	11015
Selma and Gulf	349	6617	17017
Do	401a	17017	17017
Selma, Marion and Memphis	287	17006	17006
Selma, Rome and Dalton	139	6610	17010
Do	171	6610	17010
Somerset	288	231	.....
South and North Alabama	170	17004	17004
Southern, of Long Island	296	1295	.....
Southern Pacific	206	46017	.....
South Carolina	162	14003	14003
Do	188	14003	14003
Do	189	14003	14003
Do	352	14003	14003
Southwestern	140	15011	15011
Do	187	15016	15016
Do	278	15016	15016
Do	371	15017	15017
Do	372	6088	15017
Do	410	15016	15016
Do	429	15016	15016
Spartanburgh and Union	336	14008	14008
Sullivan and Erie Coal and Railroad	383	2461	8061
Stevens, W. H. and C. B., (proprietors Eastern Ohio)	363	9052	21048
Tennessee and Pacific	293	19016	19001
Terre Haute and Indianapolis	45	22002	22002
Do	49	23031	.....
Texas, Mississippi River and Northwestern	390	7525a	29003
Do	417	7545a	29004
Toledo, Canada Southern and Detroit	152	24035	.....
Toledo, Wabash and Western	145	9022	.....
Tuskegee	367	17019	17019
Union Pacific	21	34 01	.....
Utah Northern	247	41003	.....
Utah Southern	199	41002	.....
Do	241	41002	.....
Utica and Black River	172	1288	.....
Do	218	1288	.....
Do	219	1288	.....
Do	222	1288	.....
Do	333	1288	.....
Vaca Valley	351	46015	.....
Vicksburgh and Brunswick	369	17021	17021
Vicksburgh and Meridian	133	18003	18003
Do	209	18003	18003
Do	211	18003	18003
Virginia and Truckee	185a	45001	.....
West End Narrow Gauge	431	28031	.....
Western	335	13011	.....
Do	338	13011	13011
Do	376	13011	13011
Do	446	5216	13011
Western and Atlantic	47	15002	15002
Western Maryland	174	3507	10006
Western North Carolina	220	13006	13006
Do	269	5006	13006
Western, of Alabama	117	17001	17001
Do	197	17007	17007
Do	233	17002	17002
West Jersey	137	2111	7019
Do	179	2112	7020
Do	202	2113	7021
West Wisconsin	135	25014	.....
White Water Valley	200	9035	21031
Wilmington and Weldon	66	13002	13002
Do	308	13002	13002
Wilmington, Columbia and Augusta	71	14002	14002
Do	72	14002	14002
Do	134	14002	14002
Winchester and Alabama. (See Memphis and Charleston.)			
Woodstock	303	532	.....
Worcester	299	3517	10016

F.—*Table showing the re-adjustment of the rates of pay per mile on railroad-routes and on certain new routes the adjustment of the rates, based upon returns of the and the number of trips per week, in accordance with the act of March 3, 1873; and*

[ABBREVIATIONS.—f. f., fixtures and furniture; f. f. c., fixtures and furniture complete; m. line; d. l., double line; t. l., triple line; m., miles; r. a., route-agents; m. m., mail-messenger. tabular form being inconvenient. The figures in parentheses in the "Remarks" column re

Order.	State.	Number of route.	New number of route.	Termini.	Corporate title of company carrying the mail.	Length of route.	Average weight of mails whole dis.
						Miles.	*Pou*
1	N. Y..	1217	.....	Albany, Buffalo.....	New York Central and Hudson River.	298	56,
2	N. Y..	1241	....	Cleveland, Elyria .... Milbury, Toledo.....	Lake Shore and Michigan Southern.	25.7 8.5	51,
3	N. Y..	1241	.....	Buffalo, Cleveland....	.....do.....	184.5	51,
4	N. Y..	1211	.....	New York, Albany...	New York Central and Hudson River.	144	52,
5	N. J..	2103	7004	New York, West Philadelphia.	Pennsylvania	90	49,
	Ohio..	9008	21007	Elyria, Millbury	Lake Shore and Michigan Southern.	74.98	45,
7	N. Y..	1241	.....	Elkhart, Chicago.....	.....do.....	101	37,

in which the contract-term expired June 30, 1876, and also in other States and Territories, the mails, the speed with which they are conveyed, the accommodations for mails and agents, act of July 12, 1876, in the case of re-adjustments taking effect on and after July 1, 1876.

catchers; r. p. o., railway post-office; apt., apartment; b. c., baggage-car; l., line or lines; s. l., single ber followed by an asterisk (*) shows the equivalent in round trips, a more particular statement in order of the routes in this table.]

Size, &c., of mail-car or apartment.	Trips per week.	Pay per mile per annum.	Former pay per mile per annum.	Amount of annual pay.	Former amount of annual pay.	Date of re-adjustment or adjustment.	Remarks.	Order.
Feet and inches.		*Dolls.*	*Dolls.*	*Dolls.*	*Dolls.*			
r. p. o., fast mail, 4 l.—60 by 9, 60 by 9, 45 by 9, 45 by 9 and 1 l.; 47 by 9, (average.)	34	1,028 00	602 00	306,344·00	179,396 00	Sept. 16, 1875	60 days, from Dec. 1, 1875. Pay to be fixed on new returns from July 23, 1876, date of discontinuance of fast mail. Average speed, 45 miles fast mail; 30 miles residue.	1
r. p. o., 38 by 9, (average,) 1 l.; 18 by 9, 1 l.; 45 by 9, (average,) 1 l.; fast mail, 4 l.—60 by 9, 60 by 9, 45 by 9, 45 by 9.	17½*	1,001 00	615 00	34,234 20	21,033 00	Sept. 16, 1875	60 days, from Dec. 1, 1875. Average speed, 32 miles fast mail; 28 miles residue. Part; residue $989.75, $817.50, $199.25, $197.37½, (3, 7, 47, 48.)	
r. p. o., 38 by 9, (average,) 1 l.; 45 by 9, (average,) 1 l.: fast mail, 4 l.—60 by 9, 60 by 9, 45 by 9, 45 by 9.	17½*	989 75	590 00	182,608 87	108,855 00	Sept. 16, 1875	60 days, from Dec. 1, 1875. Average speed, 32 miles fast mail; 28 miles residue. Part; residue $1,001, $817.50, $199.25, $197.37½, (2, 7, 47, 48.)	3
r. p. o., fast mail, 4 l.—60 by 9, 60 by 9, 45 by 9, 45 by 9; and 1 l. 47 by 9, (average.)	47*	985 00	597 00	141,840 00	85,968 00	Sept. 16, 1875	60 days, from Dec. 1, 1875. Part; residue $140, (71.) Average speed, 45 miles fast mail; 30 miles residue. Pay to be fixed on new returns from July 23, 1876, date of discontinuance of fast mail.	4
r. p. o., 46 by 8.7, f. f. c., 3 l.; 58.6 by 8.5, f. f. c., 1 l.; tender, 29 by 7.9, f. f. c., 1 l.; r. a. apt., (average,) 15.4 by 6.6, 1 l. through; 8 by 6.4, 1 additional to Monmouth Junction, 42 m.	49¼*	915 00	628 00	82,350 00	56,520 00	Sept. 16, 1875	Main route; branch $90, (118.)	5
r. p. o., 45 by 9, (average,) 1 l.; 18 by 9, 1 l.; fast mail, 4 l.—60 by 9, 60 by 9, 45 by 9, 45 by 9.	13	885 62½	755 00	66,404 16	56,609 90	Sept. 16, 1875	Pay to be fixed on new returns from July 23, 1876, date of discontinuance of fast mail. Average speed, 32 miles fast mail; 28 miles residue.	6
r. p. o., 36 by 9, 1 l.; 45 by 9, (average,) 1 l.; fast mail, 4 l.—60 by 9, 60 by 9, 45 by 9, 45 by 9.	17½*	817 50	615 00	82,567 50	62,115 00	Sept. 16, 1875	60 days, from Dec. 1, 1875. Average speed, 32 miles fast mail; 28 miles residue. Part; residue $1,001, $989.75, $199.25, $197.37½, (2, 3, 47, 48.)	7

F.—*Table showing the re-adjustment of the rates of pay per mile on railroad-rout*

Order.	State.	Number of route.	New number of route.	Termini.	Corporate title of company carrying the mail.	Length of route.	Average weight of mails whole distance per day.	Miles per hour.
						Miles.	*Pounds.*	
8	Ohio..	9049	21045	Toledo, Elkhart.....	Lake Shore and Michigan Southern.	133.6	37,145	32,
9	Pa....	2401	8001	Philadelphia, Pittsburgh.	Pennsylvania.....	353.6	29,078	
10	Md ...	3503	.....	Baltimore, Washington.	Baltimore and Ohio.....	40	26,694	
11	Md ...	3514	.....	Bay View Junction, n. o., (Baltimore,) Washington.	Baltimore and Potomac	46.1	18,754	
12	Pa....	2401	.....	Philadelphia, Pittsburgh.	Pennsylvania.....	353.6	20,027	
13	Ohio..	9036	21032	Columbus, Pittsburgh	Pittsburgh, Cincinnati and Saint Louis.	193	16,420	
14	Md ...	3503	.....	Baltimore, Washington.	Baltimore and Ohio.....	40	15,362	
15	Nebr .	34001	.....	Omaha, Ogden City ..	Union Pacific	1,032.40	15,348	2
16	Md ...	3514	.....	Baltimore, Washington.	Baltimore and Potomac	42.6	12,772	2
17	Md ...	3504	10003	Baltimore, Grafton...	Baltimore and Ohio	294	8,360	2
18	Cal ...	46001	.....	San Francisco, Ogden	Central Pacific	880.96	11,434	2
19	Ohio..	9031	21027	Cincinnati, Xenia....	Pittsburgh, Cincinnati and Saint Louis.	65.96	9,190	2
20	N. Y..	1201	.....	New York, Dunkirk .	Erie.....	459	6,082	
21	Ohio..	9016	21014	Columbus, Xenia.....	Columbus and Xenia	55	9,096	

in States in which the contract-term expired June 30, 1876, *&c.*—Continued.

Size, &c., of mail-car or apartment.	Trips per week.	Pay per mile per annum.	Former pay per mile per annum.	Amount of annual pay.	Former amount of annual pay.	Date of re-adjustment or adjustment.	Remarks.	Order.
Feet and inches.		*Dolls.*	*Dolls.*	*Dolls.*	*Dolls.*			
r. p. o., 45 by 9, (average,) 1 l.; fast mail, 4 l.—60 by 9, 60 by 9, 45 by 9, 45 by 9.	13	791 00	625 00	105, 677 60	83, 500 00	Sept. 16, 1875	60 days, from Dec. 1, 1875. Average speed, 32 miles fast mail; 28 miles residue.	8
r. p. o., 58.6 by 8.5, f. f. c., 1 l.; 46 by 8.5, f. f. c., 1 l.; tender, 29 by 7.9, 1 l.; r. a. apt., (average,) 11.6 by 8, f. f., a. l.	37½*	598 00	417 00	211, 452 80	147, 451 20	Sept. 16, 1875	60 days, from Dec. 1, 1875.	9
r. p. o., 52.4 by 9.6½, f. f. d. l.	54	551 00	375 00	22, 040 00	15, 000 00	July 1, 1873	To April 18, 1874. Weight for 30 days from Oct. 5, 1874, and 90 days on night-line r. p. o. from Dec. 31, 1875.	10
r. p. o., 46.10 by 9, f. f., d. l.; r. a. apt., 14.9 by —, f. f., a. l.	29	431 00	327 00	19, 869 10	13, 930 20	June 4, 1875	90 days, from Oct. 1, 1875; 3.5 miles increase.	11
r. p. o., 46.5 by 8.9, f. f. c., a. l.; r. a. apt., 10.11 by 8.7, f. f., a. l.	36	417 00	438 00	147, 451 20	154, 876 80	July 1, 1874	90 days, from Oct. 1, 1874.	12
r. p. o., 50.5 by 9.2, f. f., a. l.	20	382 00	230 00	73, 726 00	44, 390 00	Dec. 1, 1875	60 days, from Dec. 1, 1875.	13
r. p. o., 52.4 by 9.6½, f. f., a. l.	48	369 00	375 00	14, 760 00	15, 000 00	Apr. 19, 1874	To Nov. 30, (as modified, instead of June 3,) 1875. In Oct., 1874.	14
r. p. o., (say) 50 by 9.9, f. f. c., a. l.	7	340 00	315 00	351, 016 00	325, 206 00	Feb. 14, 1876	r. p. o, with platforms, 54.5 by 9.9. See returns for 1874. In Feb., 1876.	15
r. p. o., 46.10 by 9, f. f., a. l.; r. a. apt., 14.6 by 8.6, f. f., a. l.	13	327 00	100 00	13, 930 20	4, 260 00	Apr. 19, 1874	Daily average of returns for 1873 and night r. p. o. line for 90 days, from Oct. 1, 1875, for adjustment from April 19, 1874, to June 3, 1875, during which period said night r. p. o. line was diverted from Washington branch Baltimore and Ohio Railroad to this route.	16
r. p. o., 52.4 by 9.7, f. f. c., d. l.; r. a. apt., 17 by 8.7½, between Baltimore and Harper's Ferry, 96 m.	27½*	322 00	360 00	94, 668 00	106, 200 00	Dec. 1, 1875	60 days, from Dec. 1, 1875. Part; residue $282, (23.) 40 miles formerly at $369.	17
r. p. o., 55.1½ by 8.9, f. f. c., a. l.	7½*	295 00	233 00	259, 883 20	205, 263 68	Feb. 14, 1876	In Feb. and March, 1876.	18
r. p. o., 50.5 by 9.2, f. f., a. l.; r. a. apt., 19.7 by 8.6, f. f., a. l.	20	292 00	210 00	19, 260 32	13, 851 60	Dec. 1, 1875	Part; residue $50....	19
r. p. o., 50 by 10, f. f. c., d. l. to Hornellsville, 332 m.; a. l. residue, 127 m.; r. a. apt., 13.11 by 10.4, f. f., a. l., 67 m.; 12.8 by 6.8, f. f., a. l., 39 m.	17½*	292 00	705 00	128, 948 00	323, 595 00	Sept. 16, 1875	127 miles at $252. 60 days, from Dec. 1, 1875.	20
r. p. o., 50.5 by 9.2, f. f., a. l.; r. a. apt., 19.7 by 8.6, f. f., a. l.	13	291 00	210 00	16, 005 00	11, 550 00	Dec. 1, 1875	60 days, from Dec. 1, 1875.	21

F.—*Table showing the re-adjustment of the rates of pay per mile on railroad-rout*

Order.	State.	Number of route.	New number of route.	Termini.	Corporate title of company carrying the mail.	Length of route.	Average weight of mails whole distance per day.	Miles per hour.
						Miles.	*Pounds.*	
22	Ind ...	22002	22002	Indianapolis, Terre Haute.	Terre Haute and Indianapolis.	73	9, 069	30
23	Md ...	3504	10003	Grafton, Wheeling...	Baltimore and Ohio.....	99	8, 360	2[illegible]
24	Ill	23031	.....	East Saint Louis, Terre Haute.	Terre Haute and Indianapolis.	165. 40	7, 560	3[illegible]
25	Ohio ..	9017	21015	Columbus, Indianapolis.	Columbus, Chicago and Indiana Central.	188	7, 116	3[illegible]
26	Ohio ..	9046	21042	Cleveland, Galion	Cleveland, Columbus Cincinnati and Indianapolis.	80	7, 748	3[illegible]
27	W. Va.	12002	.....	Grafton, Parkersburg.	Baltimore and Ohio	104. 58	6, 506	2[illegible]
28	Ohio ..	9001	21001	Bellaire, Newark.....	Central Ohio	104¼	5, 779	2[illegible]
29	Ky....	20005	20005	Louisville, Nashville.	Louisville and Nashville	186. 6	8, 366	20
30	Ohio ..	9011	21010	Chicago, O., Newark.	Baltimore and Ohio, (lessees Sandusky, Mansfield and Newark.)	88	5, 463	30
31	Ohio ..	9032	21028	Cincinnati, Parkersburg.	Marietta and Cincinnati.....	195. 15	7, 096	30
32	Ohio ..	9046	21042	Galion, Cincinnati ...	Cleveland, Columbus Cincinnati and Indianapolis.	165. 25	7, 748	36
33	Ind ...	22003	22003	Indianapolis, Cincinnati.	Indianapolis, Cincinnati and La Fayette.	113. 50	6, 415	28
34	Ind ...	22005	22005	Indianapolis, La Fayette.	.....do.....	65¼	6, 282	28
35	Ohio ..	9051	21047	Chicago, O., Chicago, Ill.	Baltimore and Ohio R. R. Co., (operating Baltimore, Pittsburgh and Chicago Railroad.)	271. 53	4, 717	35
36	Va....	4409	11008	Richmond, Petersburgh.	Richmond and Petersburgh ...	24. 07	3, 927	27
37	Ind ...	22028	22029	La Fayette, Kankakee.	Cincinnati, La Fayette and Chicago.	75. 75	7, 206	35
38	Ohio ..	9032	.....	Pittsburgh, Chicago..	Pittsburgh, Fort Wayne and Chicago.	469½	6, 961	27
39	Va....	4410	11009	Petersburgh, Weldon	Petersburgh.....	65. 51	3, 342	20
40	Ind ...	22010	22010	Cincinnati, East Saint Louis.	Ohio and Mississippi	341	5, 669	26.

in *States in which the contract-term expired June* 30, 1876, *&c.*—Continued.

Size, &c., of mail-car or apartment.	Trips per week.	Pay per mile per annum.	Former pay per mile per annum.	Amount of annual pay.	Former amount of annual pay.	Date of re-adjustment or adjustment.	Remarks.	Order.
Feet and inches.		*Dolls.*	*Dolls.*	*Dolls.*	*Dolls.*			
r. p. o., 50. 6 by 9.3, f. f. c., a. l.; r. a., apt., 19.7 by 7.7, f. f., d. l.	22*	290 00	208 00	21, 170 00	15, 184 00	Dec. 1, 1875	60 days, from Dec. 1, 1875.	22
r. p. o., 52.4, by 9.7, f. f. c., a. l.; r. a., apt., 17 by 8.7½.	27¾*	282 00	320 00	27, 918 00	31, 680 00	Dec. 1, 1875	60 days, from Dec. 1, 1875. Part; residue $322, (17.)	23
r. p. o., 50.6 by 9.9, f. f. c. and m. c., a. l.; r. a. apt. 19 by 7, f. f., a. l.	19	272 00	204 00	44, 988 80	33, 741 60	Dec. 1, 1875	60 days, from Dec. 1, 1875.	24
r. p. o., 50.5 by 9.2, f. f., a. l.	20	266 00	166 00	50, 008 00	31, 208 00	Dec. 1, 1875	60 days, from Dec. 1, 1875.	25
r. p. o., 39.2 by 9.2, f. f., d. l.	19	260 60	262 00	20, 848 00	20, 960 00	July 1, 1876	Part; residue $235.60, (32.) Under act of July 12, 1876.	26
r. p. o., 52.4 by 9.7, f. f. c., a. l.	19	258 00	330 00	26, 981 64	34, 511 40	Dec. 1, 1875	60 days, from Dec. 1, 1875.	27
r. p. o., 50 by 8, f. f., a. l.	20	249 00	267 00	26, 113 88	28, 001 62	Dec. 1, 1875	60 days, from Dec. 1, 1875. Part; residue $95, (112.)	28
r. p. o., 45 by 9.7, f. f., a. l., to Bowling Green, 113.5 miles; r. a. apt., 14.9 by 9.7, f. f., 14 l., to Bowling Green, 113. 5 m., and 2½ l. res., 73.1 m.; addl. r. a. apt., 14 by 7.4, f. f., a. l., to Lebanon Junction, 30 m.	18¾*	247 80	247 50	44, 046 48	43, 990 50	July 1, 1876	Average speed. 73. 1 miles formerly at $217.50; 73. 1 miles now at $217.80. Under act of July 12, 1876.	29
r. p. o., 50 by 8, f. f., a. l.	20	245 00	152 00	21, 560 00	13, 376 00	Dec. 10, 1875	60 days, from Dec. 15, 1875. Part; residue $75, (145.)	30
r. p. o., 52.4 by 9, f. f., a. l.; apt. (no r. a.) 14 by 9, a. l.	14	243 40	373 00	47, 499 51	72, 790 95	July 1, 1876	Under act of July 12, 1876.	31
r. p. o., 39.2 by 9.2, f. f., a. l.	19	235 60	237 00	38, 932 90	39, 164 25	July 1, 1876	Part; residue $260.60, (26.) Under act of July 12, 1876.	32
r. p. o., 50 by 9.5, f. f. c., a. l.; r. a. apt., 12 by 7. 6, f. f. c., a. l.	18	235 30	268 00	26, 706 55	30, 418 00	July 1, 1876	Under act of July 12, 1876.	33
r. p. o., 50 by 9.5, f. f. c., a. l.; r. a. apt., 12 by 7.6, f. f., a. l.	22*	234 40	262 00	15, 382 50	17, 193 75	July 1, 1876	Under act of July 12, 1876.	34
r. p. o., 50 by 8, f. f., a. l.; r. a. apt., 20 by 8, f. f., a. l.	14	235 00	203 00	63, 809 55	55, 120 59	Dec. 10, 1875	60 days, from Dec. 10, 1875.	35
r. p. o., 42 by—, f. f. c., d. l.	13	232 00	213 00	5, 734 24	5, 368 50	July 1, 1875	$150 m. m. 60 days, half from June 1, 1875, and residue from Jan. 24, 1876. 0. 43 mile decrease.	36
r. p. o., 50 by –, f. f. c., a. l.; r. a. apt., 12 by 7. f. f. c., a. l.	13	224 50	262 00	17, 005 87	19, 846 50	July 1, 1876	Under act of July 12, 1876.	37
24. 3 by 11½, 21 by 8.9, f. f., d. l. to Homewood, 35 m.; a. l. res.	25¼*	224 00	209 00	105, 518 00	98, 475 50	July 1, 1873 to Aug. 8, 1875	90 days, from Oct. 1, 1874. 35 miles at $234; 35 miles formerly at $219.	38
r. p. o., 42.4 by 8.10, f. f. c., d. l.	13	222 00	204 00	14, 543 22	13, 364 04	July 1, 1875	60 days, one-half from June 1, 1875, and residue from Jan. 24, 1876.	39
r. p. o., 50 by 10, 50 by 10, 50 by 10, 45 by 10, 41 by 10, f. f., a. l.	13¾*	215 00	254 00	73, 315 00	88, 424 00	July 1, 1876	72. 40 miles formerly at $279. Under act of July 12, 1876.	40

F.—*Table showing the re-adjustment of the rates of pay per mile on railroad-rout*

Order.	State.	Number of route.	New number of route.	Termini.	Corporate title of company carrying the mail.	Length of route.	Average weight of mails whole distance per day.	Miles per hour.
						Miles.	*Pounds.*	
41	Ky....	20008	20008	Bowling Green, Guthrie.	Louisville and Nashville	51	5, 410	2[illegible]
42	Tenn..	19009	19009	Guthrie, Paris	.....do.....	82. 5	5, 030	2[illegible]
43	Tenn..	19010	19010	Milan, Paris	.....do	43. 5	4, 969	25
44	Ohio ..	9002	.....	Pittsburgh, Chicago..	Pittsburgh, Fort Wayne and Chicago.	469. 50	5, 755	25
45	Ky....	20004	20004	Cincinnati, Louisville	Louisville, Cincinnati, and Lexington.	110¾	8, 362	27½
46	Ohio ..	9051	.....	Chicago, O., Chicago, Ill.	Baltimore and Ohio, (operating Baltimore, Pittsburgh and Chicago.)	271. 53	2, 801	35
47	N. Y ..	1241	.....	Toledo, Elkhart.....	Lake Shore and Michigan Southern.	143	2. 215	32, 2[illegible]
48	N. Y ..	1241	.....	Elyria, Millbury.....	.....do.....	79. 3	2, 215	32, 2[illegible]
49	Ohio ..	9011	.....	Chicago, O., Newark.	Baltimore and Ohio, (lessees Sandusky, Mansfield and Newark.)	88	2, 321	30
50	Ill.....	23010	.....	Galesburgh, Quincy..	Chicago, Burlington and Quincy.	100	3, 172	25
51	Ohio ..	9002	21002	Pittsburgh, Chicago..	Pittsburgh, Fort Wayne and Chicago.	469½	4, 619	27
52	Mo....	28011	.....	Sedalia, Denison	Missouri, Kansas and Texas...	447	2, 809	22
53	Tenn..	19002	19002	Bristol, Chattanooga .	East Tennessee, Virginia and Georgia.	242. 7	4, 023	20
54	Ohio ..	9018	21016	Galion, Indianapolis .	Cleveland, Columbus, Cincinnati and Indianapolis.	204	3, 830	31
55	Ky....	20018	20018	Cincinnati Junction, Louisville and Nashville Junction.	Louisville, Cincinnati and Lexington.	4. 13	4, 725	12
56	Mo....	28014	.....	Hannibal, Sedalia....	Missouri, Kansas and Texas...	142. 88	2, 135	20
57	Ill.....	23028	.....	Terre Haute, East Saint Louis.	Indianapolis and Saint Louis..	189	2, 223	30
58	N. Y ..	1222	.....	Troy, Saratoga Springs.	Delaware and Hudson Canal Company.	32. 81	2, 816	30
59	Ohio ..	9030	21026	Cincinnati, Hamilton.	Cincinnati, Hamilton and Dayton.	26. 53	3, 961	26
60	N. C...	13002	13002	Weldon, Wilmington.	Wilmington and Weldon.....	163. 07	3, 699	24
61	Ga	15003	15003	Atlanta, West Point	Atlanta and West Point	86. 68	2, 404	22

in States in which the contract-term expired June 30, 1876, *&c.*—Continued.

Size, &c., of mail-car or apartment.	Trips per week.	Pay per mile per annum.	Former pay per mile per annum.	Amount of annual pay.	Former amount of annual pay.	Date of re-adjustment or adjustment.	Remarks.	Order.
Feet and inches.		*Dolls.*	*Dolls.*	*Dolls.*	*Dolls.*			
r. p. o., 45 by 9.5, f. f., s. l.; apt. in b. c. (no r. a.) 14.9, by 9.7, f. f., s. l.	13	210 00	186 00	10, 710 00	9, 486 00	July 1, 1876	Under act of July 12, 1876.	41
r. p. o., 45 by 9. 5, f. f., s. l.; apt. in b. c. (no r. a.) 14.9 by 9.7, f. f., s. l.	13	210 00	183 00	17, 325 00	15, 097 50	July 1, 1876	Under act of July 12, 1876.	42
r. p. o., 45 by 9.5, f. f., s. l.	17½*	209 10	175 00	9, 095 85	7, 612 50	July 1, 1876	Part; residue $135, (74.) Under act of July 12, 1876.	43
24.3 by 8.11½, 21 by 8.9, f. f., d. l. to Homewood, 35 m.; s. l., residue, 634.50 miles.	22½*	209 00	300 00	98, 475 50	140, 850 00	July 1, 1873	In Aug., 1875; additional "fast mail" from Sept. 12, 1875, 7 times per week. 35 miles, at $219.	44
9.6 by 8, f. f., s. l., and b. c.	18	207 00	200 00	22, 847 63	22, 075 00	July 1, 1876	Under act of July 12, 1876.	45
r. p. o., 50 by 8, f. f., s. l.; r. a. apt., 20 by 8, f. f., s. l.	14	203 00	.....	.....	.....	Feb. 16, 1875	New. In June, 1875.	46
r. p. o., 38 by 9, 1 l., 36 by 9, 1 l.	17½*	199 25	485 00	28, 492 75	69, 355 00	Sept. 16, 1875	60 days, from Dec. 1, 1875. Average speed, 32 miles fast mail, 28 miles residue. Part; residue $1,001, $989,75, $817.50, $197.37½, (2, 3, 7, 48.)	47
r. p. o., 38 by 9, (average,) 1 l.; 45 by 9, (average) ½ l.; 18 by 9, ½ l.	17½*	197 37½	485 00	15, 651 84	38, 460 50	Sept. 16, 1875	60 days, from Dec. 1, 1875. Average speed, 32 miles fast mail, 28 miles residue. Part; residue $1.001. $989.75, $817.50, $199.25, (2, 3, 7, 47.)	48
r. p. o., 50 by 8, f. f., s. l.	20	195 00	152 00	17, 160 00	13, 376 00	Feb. 16, 1875	In June, 1875. Part; residue $93, (114.)	49
r. p. o., 44.11 by 9.6., f. f. c. and m. c., s. l.	12	194 00	190 00	19, 400 00	19, 000 00	July 1, 1875	Ordered July, 1876 ..	50
24.3 by 11½, 21 by 8.9, f. f., d. l. to Homewood, 35 m.; s. l. residue.	29½*	193 00	209 00	90, 613 50	98, 125 50	Dec. 1, 1875	60 days, from Dec. 1, 1875. 35 miles formerly at $219.	51
r. p. o., (say,) 51.2 by 9.10, f. f., s. l.	7	190 00	223 00	84, 930 00	99, 681 00	July 1, 1875	In July, 1875. r. p. o. "over all" 57. 7. See Oct. 73 returns.	52
r. p. o., 39.7 by 8.9½, f. f. c., s. l.	14	189 70	244 00	46, 040 19	59, 218 80	July 1, 1876	Main route; branch $135, (78.) Under act of July 12, 1876.	53
r. p. o., 39.2 by 9.2, f. f. c., s. l.	15⅔*	187 00	185 00	38, 148 00	37, 740 00	July 1, 1876	Under act of July 12, 1876.	54
In charge of conductor.	12	182 00	.....	.....	.....	July 1, 1874	New; ordered Sept., 1876.	55
r. p. o., (say,) 51.2 by 9.10, f. f., s. l.	7	180 00	215 00	25, 718 40	30, 719 20	July 1, 1875	In July, 1875. r. p. o., "over all," 57, 7. See Oct., 1873, returns.	56
r. p. o., 40 by 9.8, f. f. c., s. l.	18	178 00	185 00	33, 642 00	34, 965 00	July 1, 1875	In April, 1875	57
21.9 by 7, f. f., s. l.	21½*	163 00	150 00	5, 348 03	4, 921 50	July 1, 1873	60 days, in May and August, 1875. Ordered Nov., 1875.	58
19 by 7.3, 8 by 6.8, f. f., d. l.	59⅚*	162 00	187 50	4, 297 86	4, 974 37	July 1, 1876	Part; residue $135, (75.) Under act of July 12, 1876.	59
21.8 by 8.7, f. f., s. l.	13	160 20	172 00	26, 123 81	28, 036 00	July 1, 1876	Main route; branch $45. .07 m. increase. Under act of July 12, 1876.	60
17 by 8.3, f. f., s. l..	14	156 00	125 00	13, 522 08	10, 786 25	Jan. 1, 1876	In Jan., 1876. .39 m. increase.	61

F. *Table showing the re-adjustment of the rates of pay per mile on railroad-routes*

Order.	State.	Number of route.	New number of route.	Termini.	Corporate title of company carrying the mail.	Length of route.	Average weight of mails whole distance per day.	Miles per hour.
						Miles.	*Pounds.*	
62	N. Y ..	1221	.....	Eagle Bridge, Rutland	Delaware and Hudson Canal Company.	62½	2, 233	30
63	Ala ...	17001	17001	Montgomery, West Point.	Western, of Alabama	88. 5	2, 204	23
64	N. Y ..	1224	.....	Albany, Canada Line.	Delaware and Hudson Canal Company.	189. 93	2, 123	30
65	Miss ..	18001	18001	Canton, Cairo	New Orleans, Saint Louis and Chicago.	342. 98	2, 819	2[illegible]
66	Pa	2429	.....	New Castle, Homewood.	Pittsburgh, Fort Wayne and Chicago.	15	2, 140	2[illegible]
67	S. C ...	14002	14002	Florence, Wilmington	Wilmington, Columbia and Augusta.	109. 70	3, 106	2[illegible]
68	Ga	6001	15004	Augusta, Atlanta	Georgia	171. 62	1, 943	2[illegible]
69	N. J ...	2101	7001	New York, Easton ...	Central, of New Jersey	74	2, 613	27
70	Ga ...	15004	15004	Augusta, Atlanta	Georgia	171. 62	1, 855	25
71	N. Y ..	1211	.....	Albany, Troy	New York Central and Hudson River.	6	1, 801	30
72	Ohio ..	9007	21006	Cleveland, Wellsville.	Cleveland and Pittsburgh	102. 36	2, 696	30
73	Tenn.	19004	19004	Nashville, Chattanooga.	Nashville and Chattanooga	153	2, 534	25
74	Tenn ..	19010	19010	Memphis, Milan	Louisville and Nashville	89	2, 416	25
75	Ohio ..	9030	21026	Hamilton, Dayton	Cincinnati, Hamilton and Dayton.	33. 92	2, 391	26
76	S. C ...	14005	14005	Charleston, Florence.	Northeastern	103	2, 366	19½
77	Ala ...	17013	17013	Mobile, New Orleans.	New Orleans, Mobile and Texas	140	2, 148	26
78	Tenn ..	19002	19002	Cleveland, Dalton	East Tennessee, Virginia and Georgia.	28. 5	2, 017	20
79	N. Y ..	1208	.....	Buffalo, Hornellsville	Erie	91	1, 670	30
80	N. Y ..	1220	.....	Saratoga Springs, Castleton.	Delaware and Hudson Canal Company.	54	1, 644	30
81	N. J ..	2106	7013	New York, Washington.	Morris and Essex	73	1, 636	25
82	Pa	2445	.....	Miles Grove, New Castle.	Erie and Pittsburgh	83	1, 606	20
83	Ind	22007	22007	New Albany, Indianapolis.	Jeffersonville, Madison and Indianapolis.	114	1, 948	27
84	Tex ...	8503	31003	Houston, Denison City.	Houston and Texas Central	337. 55	2, 089	20
85	N. Y ..	1255	.....	Canandaigua, Elmira.	Northern Central	68. 5	1, 332	23
86	Ga	6008	15009	Savannah, Live Oak ..	Atlantic and Gulf	180. 47	1, 519	19

in States in which the contract-term expired June 30, 1876, *&c.*—Continued.

Size, &c., of mail-car or apartment.	Trips per week.	Pay per mile per annum.	Former pay per mile per annum.	Amount of annual pay.	Former amount of annual pay.	Date of re-adjustment or adjustment.	Remarks.	Order.
Feet and inches.		*Dolls.*	*Dolls.*	*Dolls.*	*Dolls.*			
21.9 by 7, f. f., a. l., to Castleton, 51 miles; d. l. residue, 11½ miles.	20½*	153 00	150 00	9, 677 50	9, 375 00	July 1, 1873	60 days, in May and August, 1875. 11½ miles at $163. Ordered Nov., 1875.	62
18 by 8.6., f. f., a. l	14	153 00	105 00	13, 540 50	9, 292 50	Jan. 1, 1876	In January, 1876	63
21.6 by 6.9, f. f., a. l	17½*	152 00	107 00	28, 869 36	19, 038 51	Feb. 1, 1876	Main route; br'chs $100, $75, (106, 142.) 12 m. increase.	64
r. p. o., (average,) 34.9 by 9.7, f. f., a. l.	7	150 70	180 00	51, 687 08	61, 736 40	July 1, 1876	Under act of July 12, 1876.	65
12 by 9, f. f., a. l.	12	150 00	100 00	2, 250 00	1, 500 00	Oct. 12, 1874	In August, 1875; ordered Oct. 1875.	66
22.7 by 8.9, f. f., a. l.	13	148 50	155 00	16, 290 45	17, 003 50	July 1, 1876	Part; residue $81, (130.) Under act of July 12, 1876.	67
24.6 by 8.6, f. f., a. l.	13	147 00	125 00	25, 228 14	21, 457 50	July 1, 1875	In October, 1875; .04 m. decrease. Under contract to June 30, 1875; ordered December, 1875.	68
14 by 7, d. l.....	49*	144 00	300 00	10, 656 00	22, 200 00	July 1, 1876	Under act of July 12, 1876.	69
r. p. o., 25.4 by 8.8, f. f., a. l.	12	142 80	147 00	24, 507 33	25, 228 14	July 1, 1876	Under act of July 12, 1876.	70
.....	27	140 00	597 00	840 00	3, 582 00	Sept. 16, 1875	60 days, from Dec. 1, 1875. Part; residue $985, (4.)	71
13 by 9, f. f., a. l ..	15½*	139 50	152 00	14, 279 22	15, 558 72	July 1, 1876	Under act of July 12, 1876.	72
12.6 by 8.8, f. f., a. l	15½*	135 00	145 00	20, 655 00	24, 525 00	July 1, 1876	39 miles formerly at $205. Under act of July 12, 1876.	73
15 by 8, f. f., a. l ...	20	135 00	145 00	12, 015 00	12, 905 00	July 1, 1876	Part; residue $209.10, (43.) Under act of July 12, 1876.	74
19 by 7.3, 8 by 6.8, f. f., a. l.	27*	135 00	150 00	4, 579 20	5, 088 00	July 1, 1876	Part; residue $162, (59.) Under act of July 12, 1876.	75
12 by 9, f. f., a. l ...	13	135 00	116 00	13, 905 00	11, 948 00	July 1, 1876	Under act of July 12, 1876.	76
17.6 by 7.3, f. f., a. l	14	135 00	130 00	18, 900 00	18, 200 00	July 1, 1876	Under act of July 12, 1876.	77
22 by 8.4, f. f., a. l..	14	135 00	100 00	3, 847 50	2, 850 00	July 1, 1876	Branch; main route $189.70, (53.) Under act of July 12, 1876.	78
14 by 9.2, 12 6 by 9.10, f. f., a. l.	22½*	133 00	362 50	12, 103 00	32, 987 50	Sept. 16, 1875	60 days, from Dec. 1, 1875.	79
21.9 by 7, f. f., a. l..	16½*	132 00	150 00	7, 128 00	8, 100 00	July 1, 1873	60 days, in May and Aug., 1875. Ordered Nov., 1875.	80
12 by 7.3, (63 miles,) 11.7 by 7.7, (73 miles,) 19.9 by 7.4, (29 miles,) f. f., d. l. to Dover, 44 miles; t. l. thence to Hackettstown, 19 miles; d. l. residue, 10 miles.	13½*	131 00	100 00	9, 753 00	6, 800 00	July 1, 1873	In July, 1874. Reported Nov., 1875. 10 m., formerly at $50. 19 m. now at $141. Part; residue $60, (192.)	81
12 by 9, f. f., a. l...	12	130 00	80 00	10, 790 00	6, 640 00	Oct. 12, 1874	In Aug., 1875. Ordered Oct., 1875.	82
13 by 7, f. f., a. l...	19	126 00	134 00	14, 364 00	15, 276 00	July 1, 1876	Under act of July 12, 1876.	83
14 by 7.3, f. f., a. l.	6	125 00	153 00	42, 193 75	52, 645 15	July 1, 1875	In March, 1875	84
15 by 8.4, (average,) 1½ l.	18½*	121 00	150 00	8, 288 50	10, 275 00	July 1, 1873	In Nov., 1875. Ordered Feb., 1876.	85
16.8 by 9.3, f. f., a. l	7	120 00	100 00	21, 656 40	18, 075 00	July 1, 1873	60 days, in Jan. and Oct., 1875. Ordered Dec., 1875. .28 m. decrease. Main route; branch $58, (198.)	86

F.—*Table showing the re-adjustment of the rates of pay per mile on railroad-ro*

Order.	State.	Number of route.	New number of route.	Termini.	Corporate title of company carrying the mail.	Length of route.	Average weight of mails whole distance per day.	
						Miles.	*Pounds.*	
87	N. C...	13004	13004	Greenboro', Charlotte	Richmond and Danville	93	2, 433	
88	Ga	15009	15009	Savannah, Live Oak..	Atlantic and Gulf	179. 20	1, 701	
89	S. C...	14004	14004	Charleston, Savannah	Savannah and Charleston.....	107. 63	1, 800	1
90	Ohio ..	9003	21003	Rochester, Bellaire...	Cleveland and Pittsburgh	68. 75	1, 717	3
91	Ohio ..	9003	21003	Pittsburgh, Rochester	.....do.....	25. 75	1, 717	30
92	Tenn..	19006	19006	Nashville, Columbia .	Louisville and Nashville	47	1, 670	24
93	Ind...	22018	22019	Jeffersonville, North Vernon.	Ohio and Mississippi	53. 50	1, 661	24½
94	S. C...	5607	14005	Charleston, Florence.	Northeastern.....	103	1, 326	19
95	Ohio ..	9027	21023	Dayton, Toledo	Dayton and Michigan	142. 96	1, 743	23
96	Ala...	17012	17012	Mobile, Montgomery.	Mobile and Montgomery	179	2, 598	24
97	N. J ..	2122	7028	New York, Denville .	Delaware, Lackawanna and Western.	35. 93	1, 058	26½
98	Ga....	6011	15012	Macon, Atlanta.....	Macon and Western.....	103. 52	1, 235	20
99	N. Y..	1224	.....	Albany, Albany Junction.	Delaware and Hudson Canal Company.	12	1, 148	30
100	Ky ...	20002	20002	Covington, Lexington	Kentucky Central...	99	1, 426	22
101	N. C ..	13007	13007	Charlotte, Augusta ..	Charlotte, Columbia and Augusta.	195. 75	1, 363	20
102	Mich .	24035	.....	Trenton Crossing, Detroit.	Toledo, Canada Southern and Detroit.	17. 30	859	28
103	N. Y..	1245	.....	Albany, Binghamton	Delaware and Hudson Canal Company.	142	1, 032	30
104	Tenn .	19006	19006	Columbia, Decatur...	Louisville and Nashville	75½	1, 670	24
105	Pa	2429	.....	Newcastle, Homewood.	Pittsburgh, Fort Wayne and Chicago.	15	2, 140	23
106	N. Y..	1224	.....	Whitehall, Castleton.	Delaware and Hudson Canal Company.	16	1, 255	30
107	Mo ...	28030	.....	Saint Joseph, Atchison.	Hannibal and Saint Joseph....	22. 08	1, 115	20
108	Ala ...	17005	17005	Memphis, Stevenson	Memphis and Charleston	271. 5	1, 207	23
109	Ill	11913	23036	Aurora, Forreston ...	Chicago and Iowa	81. 64	972	21
110	Iowa..	27011	.....	Viele Junction, Burlington.	Chicago, Burlington and Quincy	25. 75	738	21
111	Ind...	22012	22012	Evansville, Terre Haute.	Evansville and Crawfordsville	110	1, 188	28
112	Ohio..	9001	21001	Newark, Columbus ..	Central Ohio	33	1, 061	25

Size in which the contract-term expired June 30, 1876, *&c.*—Continued.

Size, &c., of mail-car or apartment.	Trips per week.	Pay per mile per annum.	Former pay per mile per annum.	Amount of annual pay.	Former amount of annual pay.	Date of re-adjustment or adjustment.	Remarks.	Order.
Feet and inches.		*Dolls.*	*Dolls.*	*Dolls.*	*Dolls.*			
18 by 9, f. f., a. l. ..	7	118 80	164 00	11, 048 40	15, 252 00	July 1, 1876	Part; residue $67.50, (161.) Under act of July 12, 1876.	87
16.8 by 9.3, f. f., a. l	13	118 80	120 00	21, 288 96	21, 656 40	July 1, 1876	Main route; branch $45, (295.) 1.27 m. decrease. Under act of July 12, 1876.	88
9 by 9, f. f., a. l....	13	117 00	111 00	12, 592 71	11, 544 00	July 1, 1876	3.63 m. increase. Under act of July 12, 1876.	89
13 by 9, f. f., a. l...	18	117 00	100 00	8, 043 75	6, 875 00	July 1, 1876	Part; residue, (extension,) $117, (91.) Under act of July 12, 1876.	90
13 by 9, f. f., a. l...	18	117 00	.....	.....	.....	July 1, 1876	New, (extension;) residue $117, (90.) Under act of July 12, 1876.	91
14.9 by 9, f. f.....	14	117 00	88 00	5, 499 00	4, 136 00	July 1, 1876	Part; residue $100.80, (104.) Under act of July 12, 1876.	92
13 by 8.7, f. f., a. l .	13	117 00	175 00	6, 259 50	9, 362 50	July 1, 1876	Under act of July 12, 1876.	93
11 by 8.4, f. f., a. l .	13	116 00	125 00	11, 948 00	13, 000 00	July 1, 1875	In Oct., 1875. 1 mile decrease. Under contract to June 30, 1875. Ordered Nov., 1875.	94
8 by 6.8, 9 by 7.3, f. f., a. l.	16⅔*	115 20	150 00	16, 469 00	21, 444 00	July 1, 1876	Under act of July 12, 1876.	95
18 by 9, f. f., a. l..	14	113 04	150 00	20, 234 16	26, 850 00	July 1, 1876	Under act of July 12, 1876.	96
6.8 by 6.8., 6.6 by 5.3, 19.9 by 7.6, f. f., t. l.	18	112 00	50 00	4, 024 16	1, 796 50	July 1, 1873	In July, 1874. Reported Nov., 1875.	97
11.7 by 6.7, f. f., a. l	13	110 00	100 00	11, 387 20	10, 352 00	July 1, 1875	In Nov., 1875. Ordered Feb., 1876	98
No r. a	18	107 00	85 73	1, 284 00	1, 028 76	July 1, 1873	60 days, in May and Aug., 1875. Ordered Nov., 1875.	99
12 by 6.6, fixtures, a. l.	12	106 20	109 00	10, 513 80	10, 791 00	July 1, 1876	Part; residue $61.20, (185.) Under act of July 12, 1876.	100
19 by 8, fixtures, a. l.	10⅔*	103 50	125 00	20, 260 13	24, 625 00	July 1, 1876	1.25 miles decrease. Under act of July 12, 1876.	101
16 by 9.3, 10.9 by 9.3, f. f., d. l.	19	102 00	86 00	1, 764 60	1, 487 80	July 1, 1875	Part; residue $92, (115.)	102
17.4 by 9.10, f. f., a. l.	16⅔*	101 00	100 00	14, 342 00	14, 200 00	Oct. 1, 1875	60 days, in May and Aug., 1875.	103
14.9 by 9, f. f	7	100 80	88 00	7, 593 60	6, 629 34	July 1, 1876	Part; residue $117, (92.) Under act July 12, 1876.	104
12 by 9, f. f., a. l...	6	100 00	50 00	1, 500 00	750 00	July 1, 1873	In Aug., 1875. Ordered Oct., 1875.	105
r. a. in b. c., a. l...	6	100 00	132 00	1, 600 00	2, 112 00	Feb. 1, 1876	Branch; main route $152, (64.)	106
13 by 7, f. f., a. l ..	13	100 00	.....	.....	.....	Dec. 20, 1875	New. In May and June, 1876.	107
24 by 9, f. f., a. l...	14	99 00	160 00	26, 878 50	43, 440 00	July 1, 1876	Main route; branch $45, (306.) Under act of July 12, 1876.	108
26 by 9¾, f. f. c., a. l	12	98 00	40 00	8, 000 72	3, 265 60	July 1, 1873	60 days, in March, 1875, and January, 1876. Ordered April, 1876.	109
15.3 by 8.9, f. f., a. l. Lap, 12.6 by 7.7, fixtures, a. l.	12	96 00	80 00	2, 472 00	2, 060 00	July 1, 1875	Part; residue $78, (134.) Lap 6 trips.	110
12.6 by 8, f. f., a. l.	12	95 40	100 00	10, 494 00	11, 000 00	July 1, 1876	Under act of July 12, 1876.	111
In b. c.; no r. a...	20	95 00	267 00	3, 135 00	8, 811 00	Dec. 1, 1875	60 days, from Dec. 1, 1875. Part; residue $249, (98.)	112

F.—*Table showing the re-adjustment of the rates of pay per mile on railroad-route*

Order.	State.	Number of route.	New number of route.	Termini.	Corporate title of company carrying the mail.	Length of route.	Average weight of mails whole distance per day.	Miles per hour.
						Miles.	*Pounds.*	
113	Ohio..	9006	21005	Cleveland, Leavittsburgh.	Atlantic and Great Western ..	49.75	1,108	2[illegible]
114	Ohio..	9011	.....	Sandusky, Chicago, O.	Baltimore & Ohio, (lessees Sandusky, Mansfield & Newark.)	28	860	3[illegible]
115	Mich.	24035	.....	Toledo, Trenton Crossing.	Toledo, Canada Southern and Detroit.	39.07	859	5[illegible]
116	Ohio..	9015	21013	Columbus, Delaware.	Cleveland, Columbus, Cincinnati and Indianapolis.	94.75	1,453	30
117	Tex ..	8505	31004	Hempstead, Austin ..	Houston and Texas Central ...	118.7	1,094	20
118	N. J ..	2103	.....	Frankford Junction, Kensington Station.	Pennsylvania.....	2.95	964	27[illegible]
119	Me ...	244	.....	Bangor, Bucksport...	Consolidated European and North American.	19.35	582	22
120	Ohio..	9038	21034	Salamanca, Dayton ..	Atlantic and Great Western ..	389.55	969	27
121	Wis ..	25014	.....	Elroy, Saint Paul	West Wisconsin.....	198.4	768	23
122	Ohio..	9013	21012	Springfield, Sandusky	Cincinnati, Sandusky and Cleveland.	131.35	751	30
123	Ga....	15012	15012	Macon, Atlanta	Central Railroad and Banking Company.	103.52	957	20
124	Ark ..	29005	.....	Argenta, Altus	Little Rock and Fort Smith ...	120	899	19
125	Ill....	23032	.....	Saint Louis, Evansville.	Saint Louis and Southeastern..	164.75	694	23
126	Ohio..	9020	21018	Portsmouth, Reed's Mills.	Marietta and Cincinnati.....	56	847	25
127	Miss..	7004	18004	Mobile, Columbus ...	Mobile and Ohio.....	472.7	659	24
128	Ga....	15001	15001	Atlanta, Charlotte...	Atlanta and Richmond Air Line.	266.50	1,045	24
129	Ohio..	9029	21025	Hamilton, Richmond.	Cincinnati, Richmond and Chicago.	45.1	887	25
130	S. C...	14002	14002	Columbia, Florence ..	Wilmington, Columbia and Augusta.	82.08	869	25
131	Nev ..	16419	45001	Reno, Virginia City ..	Virginia and Truckee.....	51.75	786	16
132	Fla ...	16002	16002	Jacksonville, Chattahoochee River.	Jacksonville, Pensacola and Mobile.	213.52	616	18
133	Ky ...	20003	20003	La Grange, Lexington.	Louisville, Cincinnati and Lexington.	67	822	20
134	Iowa..	27011	.....	Keokuk, Viele Junction.	Chicago, Burlington & Quincy.	17	574	21
135	Tenn .	19007	19007	Nashville, Hickman .	Nashville and Chattanooga....	170.82	733	20
136	N. J ..	2111	7019	Glassborough, Millville.	West Jersey	22	724	21
137	Kans .	33013	.....	Topeka, Kansas City.	Atchison, Topeka and Santa Fé.	49.84	708	22
138	Tex...	8577a	31005	Bremond, Waco.....	Houston and Texas Central ...	44.56	634	20
139	Cal ...	46011	.....	San Francisco, Lakeville.	San Francisco and North Pacific.	34	632	25

in States in which the contract-term expired June 30, 1876, *&c.*—Continued.

Size, &c., of mail-car or apartment.	Trips per week.	Pay per mile per annum.	Former pay per mile per annum.	Amount of annual pay.	Former amount of annual pay.	Date of re-adjustment or adjustment.	Remarks.	Order.
Feet and inches.		*Dolls.*	*Dolls.*	*Dolls.*	*Dolls.*			
14.4 by 7.10, f. f., a. l.	24	94 50	100 00	4,701 38	4,975 00	July 1, 1876	Part; residue $61.20, (186.) Under act of July 12, 1876.	113
16.6 by 6.8, f. f., a. l	18	93 00	152 00	2,604 00	4,256 00	Feb. 16, 1875	In June, 1875. Part; residue $195, (49.)	114
16.9 by 9.3, 10.9 by 9.3, f. f., a. l.	13	92 00	86 00	3,594 44	3,360 00	July 1, 1875	Part; residue $102, (102.) Ordered October, 1875.	115
11 by 9.2, f. f., a. l.	6	90 00	120 00	2,227 50	2,970 00	July 1, 1876	Under act of July 12, 1876.	116
14 by 7.3, f. f., a. l .	6	90 00	100 00	10,683 00	11,870 00	July 1, 1875	In March, 1875. Ordered April, 1876.	117
13 by 6.2½, a. l	18	90 00	88 00	265 50	259 60	Sept. 16, 1875	60 days, from Dec. 1, 1875. Branch; main route $915, (5.)	118
9.6 by 7.6, f. f., d. l.	12	89 00	.....	.....	.....	Feb. 1, 1875	New. In Sept., 1875. Ordered Oct., 1875.	119
14.4 by 7.10, f. f., a. l	16*	88 20	90 00	34,358 31	35,059 50	July 1, 1876	Under act of July 12, 1876.	120
40 by 9, f. f., a. l...	6	88 00	100 00	17,459 20	19,840 00	July 1, 1875	In Sept., 1875. Main route; branch $30. Ordered Dec., 1875.	121
13.6 by 9, f. f., a. l., and m. c.	13	87 50	100 00	11,493 12	13,135 00	Jan. 1, 1875	In April, 1875. Ordered Feb., 1876.	122
17.7 by 6.7, f. f., a. l.	13	87 30	110 00	9,037 30	11,387 20	July 1, 1876	Under act of July 12, 1876. 39 days, 9 from March 15 and 30 from May 15, 1876.	123
11 by 6, f. f., a. l...	6	85 00	.....	.....	.....	Oct. 1, 1875	In Jan., 1876. New. Ordered Apr., 1876.	124
12 by 6.6, f. f., a. l.	12	84 00	110 00	13,839 00	18,122 50	July 1, 1875	Main route; branch 45, (308.) In Mar., 1875; reported October, 1875.	125
14.6 by 9.6, f. f., a. l	12	82 80	158 00	4,636 80	8,848 00	July 1, 1876	Under act of July 12, 1876.	126
22 by 9, f. f., a. l ..	7	82 00	125 00	38,761 40	59,087 50	July 1, 1873	In Oct., 1875. Main route; branch $50, (249.) Ordered Nov., 1875.	127
19.11 by 8.11½, f. f., a. l.	7	81 00	100 00	21,586 50	26,650 00	July 1, 1876	Under act of July 12, 1876.	128
12 by 9, f. f., a. l ..	12	81 00	118 00	3,653 10	5,321 80	July 1, 1876	Under act of July 12, 1876.	129
22.7 by 8.9, f. f., a. l.	7	81 00	100 00	6,648 48	8,208 00	July 1, 1876	Part; residue $148.50, (67.) Under act of July 12, 1876.	130
13.10 by 8, a. l	7	80 00	72 29	4,140 00	3,741 00	July 1, 1874	In March, 1876. Ordered May, 1876.	131
16 by 8, (82 miles,) 10 by 7, (131.75 miles,) f. f., a. l.	11½*	80 00	90 00	17,081 60	19,396 80	July 1, 1875	60 days, half from Nov. 15, 1875, and residue from January 1, 1876. Main route; branch $20, (345.) 2 miles decrease.	132
8.6 by 6.1, f. f., a. l.	12	78 30	92 00	5,246 10	6,164 00	July 1, 1876	Under act of July 12, 1876.	133
15.3 by 8.9, f. f., a. l	12	78 00	80 00	1,326 00	1,360 00	July 1, 1875	Part; residue lap, (110.)	134
12.6 by 8.8, f. f., a. l	12½*	77 40	78 00	13,221 47	13,323 96	July 1, 1876	Under act of July 12, 1876.	135
13 by 8.3, f. f., a. l.	12	76 50	100 00	1,663 00	2,200 00	July 1, 1876	In March, 1876. Under act July 12, 1876.	136
13 by 8.6, (average,) f. f., a. l.	7	75 00	.....	.....	.....	Jan. 1, 1875	In Jan., 1876. New; ordered April, 1876.	137
14 by 7.3, f. f., a. l..	6	75 00	.....	.....	.....	July 1, 1875	In Mar., 1875. New; ordered Mar., 1876.	138
12 by 9, a. l.	7	75 00	.....	.....	.....	July 1, 1874	New; in June, 1876. Ordered Sept., 1876. Part; residue $75, (140.)	139

F.—*Table showing the re-adjustment of the rates of pay per mile on railroad-rout*

Order.	State.	Number of route.	New number of route.	Termini.	Corporate title of company carrying the mail.	Length of route.	Average weight of mails whole distance per day.	Miles per hour.
						Miles.	*Pounds.*	
140	Cal ...	46011	.....	Lakeville, Cloverdale.	San Francisco and North Pacific.	56	632	[illegible]
141	Kans .	33009	.....	Atchison, Lincoln....	Atchison and Nebraska.....	152.28	558	23
142	N. Y..	1224	.....	Troy, Albany Junction.	Delaware and Hudson Canal Co.	6	547	30
143	Ala...	6610	17010	Selma, Dalton.....	Selma, Rome and Dalton.....	237.5	545	20
144	N. Y..	1288	.....	Carthage, Theresa Junction.	Utica and Black River	20.50	529	20
145	Ohio ..	9011	21010	Sandusky, Chicago, O.	Baltimore and Ohio, (lessees Sandusky, Mansfield and Newark.)	28	513	30
146	Ind...	22004	22004	Indianapolis, Peru ...	Indianapolis, Peru and Chicago.	78	699	21
147	Ind...	22009	22009	Richmond, Chicago ..	Pittsburgh, Cincinnati and Saint Louis.	225.5	661	25
148	N. Y..	1804	.....	Saratoga Springs, North Creek.	Adirondack	57.96	578	20
149	Tenn .	19008	19008	Nashville, Guthrie...	Saint Louis and Southeastern .	48	589	23
150	Utah .	41003	.....	Ogden, Franklin	Utah Northern.....	79.94	645	14
151	Ill ...	23005	.....	Sterling, East Saint Louis.	Saint Louis, Rock Island and Chicago.	291.36	450	22
152	Vt ...	528	.....	Wells River, Montpelier.	Montpelier and Wells River...	38.62	443	21
153	N. Y..	1234	.....	Hicksville, Port Jefferson.	Long Island.....	36.50	320	23
154	Ky ..	20007	20007	Lebanon Junction, Richmond Junction.	Louisville and Nashville	76.4	742	20
155	Ga....	15010	15010	Savannah, Macon	Central Railroad and Banking Co.	192½	597	20
156	S. C...	14003	14003	Branchville, Charleston.	South Carolina.....	62.25	563	18
157	Mich .	24008	.....	Jackson, Fort Wayne.	Fort Wayne, Jackson and Saginaw.	96.82	436	20
158	N. J ..	2258	7003	Elizabethport, Sea Plain.	Central, of New Jersey.....	47.9	422	27
159	Ind...	22013	22014	State Line, Logansport.	Pittsburgh, Cincinnati and Saint Louis.	61	710	22
160	Ky ...	20011	20011	Louisville, Elizabethtown, Paducah.	Louisville, Paducah and Southwestern.	232.19	641	20
161	N. C ..	13004	13004	Goldsborough, Greensborough.	Richmond and Danville	130.35	594	21
162	Ga....	15005	15005	Millen, Augusta	Central Railroad and Banking Co.	53¼	518	15

in States in which the contract-term expired June 30, 1876, *&c.*—Continued.

Size, &c., of mail-car or apartment.	Trips per week.	Pay per mile per annum.	Former pay per mile per annum.	Amount of annual pay.	Former amount of annual pay.	Date of re-adjustment or adjustment.	Remarks.	Order.
Feet and inches.		*Dolls.*	*Dolls.*	*Dolls.*	*Dolls.*			
12 by 9, a. l.	7	75 00	50 00	4,200 00	2,800 00	July 1, 1874	In June, 1876. Part; residue new, $75, (139.) Ordered Sept., 1876.	140
12.2 by 8.10, 12 by 7, f. f. c., a. l.	6	75 00	60 00	11,421 00	9,136 80	June 1, 1876	In June, 1876. Ordered Aug., 1876.	141
No r. a.....	24	75 00	150 00	450 00	900 00	Feb. 1, 1876	Branch; main route $152, (64.)	142
14 by 7.6, f. f., a. l.	7	75 00	100 00	17,812 50	23,750 00	July 1, 1875	In Oct., 1875. Under contract to June 30, 1875. Ordered Jan., 1876.	143
9 by 9, f. f., a. l....	12	75 00	.....	.....	.....	Mar. 15, 1875	Part; residue $50, (262); branch $57, (205.) In Mar., 1876. New; ordered May, 1876.	144
16.6 by 6.8, f. f., a. l.	18*	75 00	152 00	2,100 00	4,256 00	Dec. 10, 1875	60 days, from Dec. 15, 1875. Part; residue $245, (30.)	145
12 by 7.1, f. f., a. l.	20½*	73 80	100 00	6,356 40	8,400 00	July 1, 1876	$600 for side service. Under act of July 12, 1876.	146
11 by 8.9, f. f., a. l.	13	73 80	75 00	16,641 90	16,912 50	July 1, 1876	Under act of July 12, 1876.	147
12.6 by 5.10, f. f., a. l.	6	72 00	.....	.....	.....	July 15, 1875	New; ordered July, 1876.	148
11.6 by 7.6., f. f., a. l.	13	71 10	112 00	3,412 80	5,376 00	July 1, 1876	Under act of July 12, 1876. To be consolidated with Ill. route 23032.	149
Freight-car, 24 by 8, f. f., a. l.	7	70 00	50 00	5,595 80	4,025 00	Aug. 2, 1875	In Aug., 1875. .56 m. decrease.	150
12 by 9.4, f. f., a. l.	13½*	70 00	64 00	20,395 20	18,647 04	Mar. 15, 1876	In Mar., 1876	151
12 by 6.10., f. f., a. l.	6	70 00	45 00	2,703 40	1,737 90	Jan. 1, 1876	In Jan., 1876	152
12 by 8, f. f., d. l. to Northport, 16½ m.; a. l. residue, 20 m.	12	70 00	.....	.....	.....	Aug. 1, 1875	In Oct., 1875. 20 miles at $60. New; ordered Mar., 1876.	153
14 by 7.4., f. f., a. l.	6	69 30	54 00	5,294 52	4,125 60	July 1, 1876	Main route, part; residue $40.50, (318;) branch $54.90, (214.) Under act of July 12, 1876.	154
8.2 by 7, f. f., a. l ..	14	69 30	80 00	13,314 25	15,370 00	July 1, 1876	38 days, 8 from Mar. 15 and 30 from May 15, 1876. Under act of July 12, 1876.	155
18 by 8, f. f., a. l...	20	68 40	80 00	4,257 90	5,080 00	July 1, 1876	Branch; main route $63, (177.) 1.25 miles decrease. Under act of July 12, 1876.	156
12.6 by 9, f. f., a. l.	10½*	68 00	51 00	6,583 76	4,937 82	Apr. 18, 1876	In Mar., 1876.....	157
12 by 7, fixtures, a. l.	12	68 00	.....	.....	.....	Nov. 15, 1875	New	158
13.4 by 8.7, f. f., a. l.	6	67 50	75 00	4,117 50	4,575 00	July 1, 1876	Under act of July 12, 1876.	159
10.3 by 8, (average,) a. l.	6	67 50	64 00	15,672 83	14,860 16	July 1, 1876	Under act of July 12, 1876.	160
19 by 8, f. f., a. l...	7	67 50	75 00	8,798 62	9,776 25	July 1, 1876	Part; residue $118.80, (87.) Under act of July 12, 1876.	161
8.2 by 7, f. f., a. l ..	14	67 50	79 00	3,585 94	4,196 87	July 1, 1876	40 days, 10 from Mar. 15 and 30 from May 15, 1876. Under act of July 12, 1876.	162

F.—*Table showing the re-adjustment of the rates of pay per mile on railroa*

Order.	State.	Number of route.	New number of route.	Termini.	Corporate title of company carrying the mail.	Length of route.	Average weight of mails whole dis.
						Miles.	*Pou*
163	Ohio..	9045	21041	Lorain, Uhrichsville	Cleveland, Tuscarawas Valley and Wheeling, (late Lake Shore and Tuscarawas Valley.)	102.45	5
164	Ga....	15011	15011	Macon, Columbus....	Southwestern	100.94	5
165	Ky ...	20010	20010	Evansville, Guthrie..	Saint Louis and Southeastern .	110.66	5
166	Md ...	3507	10006	Baltimore, Williamsport.	Western Maryland	91.62	5
167	Ind...	22008	22008	New Albany, Michigan City.	Louisville, New Albany and Chicago.	288	5
168	Ohio..	9047	21043	Mansfield, Toledo....	Pennsylvania	88.10	4
169	Miss..	18002	18002	Memphis, Grenada...	Mississippi and Tennessee	101.7	4
170	Ga...	6012	15013	Macon, Brunswick...	Macon and Brunswick.....	188	3
171	Miss..	7002	18002	Memphis, Grenada...	Mississippi and Tennessee	101.7	3
172	Miss..	18003	18003	Vicksburgh, Jackson.	Vicksburgh and Meridian....	45.5	1,0
173	Ga....	15016	15016	Macon, Fort Valley..	Southwestern	29.50	4
174	Ga...	15016	15016	Fort Valley, Eufaula.	Southwestern	115.34	4
175	Ohio..	9053	21049	Marietta, Parkersburgh.	Marietta and Cincinnati.....	15.87	4
176	Ga....	6006	15007	Union Point, Athens	Georgia	39.92	3
177	S. C...	14003	14003	Kingsville, Augusta..	South Carolina.....	118	4
178	S. C...	14003	14003	Kingsville, Columbia	.....do	25.7	4
179	N. Y..	1290	.....	Buffalo, Jamestown..	Buffalo and Jamestown.....	71.09	3
180	*Utah..*	41002	.....	Salt Lake City, Provo City.	Utah Southern	49	3

in States in which the contract-term expired June 30, 1876, *&c.*—Continued.

Size, &c., of mail-car or apartment.	Trips per week.	Pay per mile per annum.	Former pay per mile per annum.	Amount of annual pay.	Former amount of annual pay.	Date of re-adjustment or adjustment.	Remarks.	Order.
Feet and inches.		*Dolls.*	*Dolls.*	*Dolls.*	*Dolls.*			
14.7 by 9, f. f., a. l.	6⅞*	67 50	50 00	6, 915 38	5, 122 50	July 1, 1876	Under act of July 12, 1876.	163
12.8 by 6.3, f. f., a. l.	6	67 50	100 00	6, 813 45	10, 094 00	July 1, 1876	45 days, 15 from Mar. 15 and 30 from May 15, 1876. Under act of July 12, 1876.	164
11.6 by 7.6, f. f., a. l.	13	67 50	108 00	7, 469 55	11, 951 28	July 1, 1876	To be consolidated with Ill. route 23032. Under act of July 12, 1876.	165
10.6 by 8, f. f., a. l.	12	67 50	75 00	6, 184 35	6, 657 30	July 1, 1876	In March, 1876. 6.12 miles formerly at $40. Under act of July 12, 1876.	166
11 by 7, f. f., a. l.	7*	67 50	50 00	19, 440 00	14, 400 00	July 1, 1876	About 15 pounds per day not weighed.	167
10 by 6.8, fixtures, a. l.	12	65 70	60 00	5, 788 17	5, 286 00	July 1, 1876	Under act of July 12, 1876.	168
13.2 by 6.10, f. f., a. l.	10*	65 70	65 00	6, 681 69	6, 610 50	July 1, 1876	Under act of July 12, 1876.	169
13.6 by 6.8, f. f., a. l.	7½*	65 00	50 00	12, 220 00	9, 400 00	July 1, 1875	In Oct., 1875. Main route; branch $40, (328.) Under contract to June 30, 1875. Ordered Dec., 1875.	170
12.2 by 6.10, f. f., a. l.	10*	65 00	80 00	6, 610 50	8, 136 00	July 1, 1875	In Oct., 1875. Under contract to June 30, 1875. Ordered Dec., 1875.	171
12 by 7.2, f. f., a. l.	7	64 80	100 00	2, 948 40	4, 550 00	July 1, 1876	Part; residue $46.08, (285.) Under act of July 12, 1876 Land-grant road.	172
12.8 by 6.3, f. f., a. l.	6	64 80	.....	.....	.....	July 1, 1876	New; extension. 45 days, 15 from Mar. 15 and 30 from May 15, 1876. Main route; branches $45, $36, $31.50. Under act of July 12, 1876.	173
12.8 by 6.3, f. f., a. l.	6	64 80	70 00	7, 474 03	8, 073 80	July 1, 1876	Main route, part; residue, $64 80, (173;) branches $45, $36, $31.50. Under act of July 12, 1876. 45 days, 15 from Mar. 15 and 30 from May 15, 1876.	174
h. c.; no r. a.	26	64 80	50 00	1, 028 37	793 50	July 1, 1876	Under act of July 12, 1876.	175
24.6 by 8.6, f. f., a. l.	13	64 00	75 00	2, 794 88	3, 315 00	July 1, 1875	In Oct., 1875. 1.08 miles decrease. $240 m. m. Under contract to June 30, 1875. Ordered Dec., 1875.	176
10 by 8, f. f., a. l.	13	63 00	70 00	7, 434 00	8, 260 00	July 1, 1876	Main route; branches $68.40, $63, $40.50, (156, 178, 317.) 11.28 miles decrease. Under act of July 12, 1876.	177
10 by 8, f. f., a. l.	13	63 00	70 00	1, 619 10	2, 149 00	July 1, 1876	Branch; main route $63, (177.) 5 miles decrease. Under act of July 12, 1876.	178
18 by 7, f. f., a. l.	6¼	63 00	.....	.....	.....	Feb. 1, 1875	New; in March, 1876. rdered May, 1876.	179
15 by 8.9, f. f., a. l.	7	63 00	.....	.....	.....	Oct. 1, 1874	In July, 1875. New; ordered Oct., 1875.	180

F.—*Table showing the re-adjustment of the rates of pay per mile on railroa*

Order.	State.	Number of route.	New number of route.	Termini.	Corporate title of company carrying the mail.	Length of route.	Average weight of mails whole dis-
						Miles.	*Poun*
181	Ohio..	9035	21031	North Bend, Hagerstown.	White Water Valley	72.58	4
182	Ohio..	9040	21036	Columbus, Athens	Columbus and Hocking Valley	77.40	4
183	N. Y..	1284	.....	Cayuga, Ithaca	Cayuga	38.05	3
184	Ga....	6016	15018	Thomasville, Albany	Atlantic and Gulf	60.79	3
185	Ky ...	20002	20002	Lexington, Nicholasville.	Kentucky Central	13	4
186	Ohio..	9006	21005	Leavittsburgh, Sharpsville.	Atlantic and Great Western	34.65	4
187	Ga....	15013	15013	Macon, Brunswick	Macon and Brunswick	188	4
188	Ala...	17009	17009	Selma, York Station	Alabama Central	81.7	4
189	Ala...	17009	17009	York Station, Meridian.	.....do	26.5	4
190	Colo..	38005	.....	Kit Carson, West Las Animas.	Arkansas Valley	56	4
191	Cal...	46017	.....	Los Angeles, Anaheim.	Southern Pacific	21.7	3
192	N. J..	2106	.....	Washington, Easton	Morris and Essex	14.40	3
193	Ill ...	23038	.....	Peoria, Jacksonville	Peoria, Pekin and Jacksonville	87.40	3
194	Ky ...	20016	20016	Maysville, Paris	Maysville and Lexington	50	4
195	N. C..	13001	13001	Raleigh, Weldon	Raleigh and Gaston	97	4
196	Ind...	22020	22021	Richmond, Fort Wayne.	Grand Rapids and Indiana	91.50	3
197	Va....	4415	11015	Portsmouth, Weldon	Seaboard and Roanoke	79.26	3
198	Ga....	6008	15009	Dupont, Bainbridge	Atlantic and Gulf	106.48	3
199	S. C..	5602	14001	Columbia, Greenville	Greenville and Columbia	144.01	3
200	R. I...	825	.....	Wickford Landing, Wickford Junction.	Newport and Wickford Railroad and Steamboat Comp'y.	3.40	3
201	Miss..	18004	18004	Mobile, Columbus	Mobile and Ohio	472.7	[illegible]
202	Ohio..	9028	21024	Hamilton, Indianapolis.	Cincinnati, Hamilton and Indianapolis.	99.49	3

in States in which the contract-term expired June 30, 1876, *&c.*—Continued.

Size, &c., of mail-car or apartment.	Trips per week.	Pay per mile per annum.	Former pay per mile per annum.	Amount of annual pay.	Former amount of annual pay.	Date of re-adjustment or adjustment.	Remarks.	Order.
Feet and inches.		*Dolls.*	*Dolls.*	*Dolls.*	*Dolls.*			
12 by 7.8, f. f., a. l.	6	62 10	62 50	4,507 22	4,536 25	July 1, 1876	Under act of July 12, 1876.	181
16 by 8.6, f. f., a. l.	12	62 10	87 50	4,806 54	6,772 50	July 1, 1876	Main route; branch $40.50, (321.) Under act of July 12, 1876.	182
16 by 7.6, f. f., a. l.	9*	62 00	50 00	2,359 10	1,902 50	Nov. 1, 1875	In Nov., 1875.	183
12 by 6, f. f., a. l.	7	62 00	50 00	3,768 98	2,916 50	July 1, 1873	60 days, in Jan. and Oct., 1875. 2.46 miles increase.	184
12 by 6.6, fixtures, a. l.	6	61 20	75 00	795 60	975 00	July 1, 1876	Part; residue $106.20, (100.) Under act of July 12, 1876.	185
14.4 by 7.10, f. f., a. l.	11*	61 20	50 00	2,120 58	1,732 50	July 1, 1876	Part; residue $94.50, (113.) 3.04 miles formerly at $68. Under act of July 12, 1876.	186
14 by 7, f. f., a. l.	6	60 30	65 00	11,336 40	12,220 00	July 1, 1876	Main route; branch $36. Under act of July 12, 1876. 46 days, 16 from Mar. 15 and 30 from May 15, 1876. 7 trips part of the year.	187
12.4 by 7.2, 12 by 7, f. f., a. l.	7	60 30	56 00	4,926 51	4,575 20	July 1, 1876	Under act of July 12, 1876. 45 days, 15 from March 15 and 30 from May 15, 1876. Average speed.	188
12.4 by 7.2, 12 by 7, f. f., a. l.	7	60 30	.....	.....	.....	July 1, 1876	New; extension of old route. Under act of July 12, 1876. 45 days, 15 from Mar. 15 and 30 from May 15, 1876. Average speed.	189
in h. c.; no r. a.	7	60 00	.....	.....	.....	July 1, 1874	In Sept., 1875. New; ordered Jan., 1876.	190
no r. a.	7	60 00	.....	.....	.....	Nov. 16, 1875	In Aug., 1876. New; ordered Sept., 1876.	191
11.7 by 7.7, f. f., a. l.	6	60 00	50 00	864 00	720 00	July 1, 1873	In July, 1874; reported Nov., 1875. Part; residue $131, $141, (81.) Ordered Dec., 1875.	192
12.4 by 8, f. f., a. l.	6½*	60 00	75 00	5,244 00	6,555 00	July 1, 1875	In March, 1875. Ordered Sept., 1876.	193
16 by 7.6, f. f., a. l.	6	59 40	59 00	2,970 00	2,950 00	July 1, 1876	Under act of July 12, 1876.	194
12 by 9, f. f., a. l.	6	59 40	75 00	5,761 80	7,275 00	July 1, 1876	....do	195
14.6 by 6.10, fixtures, a. l.	12	59 40	50 00	5,435 10	4,575 00	July 1, 1876	....do	196
20.6 by 8.6, f. f. c. and m. c., a. l.	6½*	59 00	75 00	4,676 34	6,000 00	July 1, 1875	In Oct., 1875. Under contract to June 30, 1875 .74 mile decrease.	197
12 by 8, 12 by 6, f. f., a. l.	7	58 00	50 00	6,175 84	5,275 00	July 1, 1873	60 days, in Jan. and Oct., 1875. Branch; main route $120, (86.) .98 mile increase. Ordered Dec., 1875.	198
12 by 7, f. f., a. l.	6	58 00	75 00	8,352 58	10,762 50	July 1, 1875	In Oct., 1875. Ordered Nov., 1875. .51 mile increase. Main route; branches $50, (262, 267.) Under contract to June 30, 1875.	199
No apt.; no r. a.	15½*	58 00	.....	.....	.....	Sept. 21, 1874	In Oct., 1875. New; ordered Dec., 1875.	200
21.6 by 8.6, f. f., a. l.	7	57 60	82 00	27,227 52	38,761 40	July 1, 1876	Under act of July 12, 1876. Land-grant road.	201
14.5 by 7.3, f. f., a. l.	15½*	57 60	50 00	5,730 62	4,974 50	July 1, 1876	Under act of July 12, 1876.	202

F.—*Table showing the re-adjustment of the rates of pay per mile on railroa*

Order.	State.	Number of route.	New number of route.	Termini.	Corporate title of company carrying the mail.	Length of route.	Average weight of mails whole dis-
						Miles.	*Pou*
203	Ohio..	9012	21011	Xenia, Dayton.....	Pittsburgh, Cincinnati and Saint Louis.	17 .	3
204	N. Y..	1296	.....	New York, Patchogue	Flushing, North Side and Central.	59.21	2
205	N. Y..	1288	.....	Theresa Junction, Morristown.	Utica and Black River	29.58	2
206	N. C ..	5006	13006	Salisbury, Old Fort ..	Western North Carolina.....	114.31	2
207	Ind ...	22001	22001	Indianapolis, Vincennes.	Indianapolis and Vincennes...	116.32	3
208	Ohio..	9033	21029	Morrow, Dresden	Pittsburgh, Cincinnati and Saint Louis.	149.4	3
209	Ill	23053	.....	East Saint Louis, Cairo.	Cairo and Saint Louis	148.50	2
210	N. Y..	1287	.....	Oswego, Charlotte ...	Rome, Watertown and Ogdensburgh.	69.64	2
211	Ga....	15007	15007	Union Point, Athens	Georgia	39.92	3
212	S. C...	14001	14001	Columbia, Greenville	Greenville and Columbia.....	144.01	3
213	Ind ...	22006	22006	Columbus, Madison..	Jeffersonville, Madison and Indianapolis.	46	3
214	Ky ...	20007	20007	Richmond Junction, Richmond.	Louisville and Nashville	33.8	3
215	Ind ...	22014	22015	Peru, La Porte	Chicago, Cincinnati and Louisville.	73	3
216	Ala ..	17004	17004	Montgomery, Decatur	South and North Alabama	182.85	6
217	Ala...	17010	17010	Selma, Dalton.... ...	Selma, Rome and Dalton	237.5	5
218	Del ...	3403	9503	Clayton, Easton	Maryland and Delaware.	44	3
219	Ind ..	22026	22027	Butler, Logansport ..	Detroit, Eel River and Illinois	94.5	3
220	N. J ..	2112	7020	Millville, Cape May..	West Jersey	41	3
221	Ohio..	9009	21008	Bayard, New Philadelphia.	Cleveland and Pittsburgh	32.5	3
222	Ind ...	22023	22024	Terre Haute, Danville.	Evansville, Terre Haute and Chicago.	56.6	2
223	N. Y..	1806	.....	Manorville, Sag Harbor.	Long Island	35.25	2
224	N. C ..	13005	13005	Goldsborough, Morehead City.	Atlantic and North Carolina ..	94.04	3
225	Ind ...	22016	22017	Bradford, Logansport	Pittsburgh, Cincinnati and Saint Louis.	114.6	3
226	Ind ...	22019	22020	Fort Wayne, Connersville	Fort Wayne, Muncie and Cincinnati.	109	3
227	S. C ..	5608	14006	Florence, Cheraw ...	Cheraw and Darlington	40.88	2
228	Ohio..	9039	.....	Youngstown, Cross Cut.	Pittsburgh, Fort Wayne and Chicago.	22.8	2
229	N. C ..	13006	13006	Salisbury, Henry's...	Western North Carolina	117.31	3

States in which the contract-term expired June 30, 1876, &c.—Continued.

Size, &c., of mail-car or apartment.	Trips per week.	Pay per mile per annum.	Former pay per mile per annum.	Amount of annual pay.	Former amount of annual pay.	Date of re-adjustment or adjustment.	Remarks.	Order.
Feet and inches.		*Dolls.*	*Dolls.*	*Dolls.*	*Dolls.*			
14 by 8.7, f. f., a. 1	18	57 60	94 00	979 20	1, 598 00	July 1, 1876	Under act of July 12, 1876.	203
12 by 6, f. f., a. 1 ..	12	57 00	.....	.....	.....	Nov. 1, 1874	$3,600 terminal and side service. Main route; branches $50, (250, 257.) New; ordered in Nov., 1875. In Aug., 1875.	204
9 by 9, f. f., a. 1	12	57 00	.....	.....	.....	Mar. 15, 1875	Branch; main route $75, (144.) In Mar., 1876. New; ordered May, 1876.	205
10.3 by 8.3, f. f., a. 1	6	57 00	50 00	6, 515 67	5, 700 00	July 1, 1873	In Oct., 1875. .31 mile increase. Ordered Dec., 1875.	206
10 by 8, f. f., a. 1...	6	56 70	50 00	6, 595 35	5, 816 00	July 1, 1876	Under act of July 12, 1876.	207
14.6 by 6.10, f. f., a. 1	6¾*	56 70	75 00	8, 470 98	11, 205 00	July 1, 1876	...do	208
9 by 6, fixtures, a. 1	6	56 00	50 00	8, 316 00	7, 425 00	July 1, 1875	In March, 1876 Ordered April, 1876.	209
23 by 6.7½, f. f., a. 1	6	56 00	.....	.....	.....	Apr. 1, 1876	New: ordered June, 1876.	210
9 by 6.8, f. f., a. 1 ..	6	55 80	64 00	2, 227 54	2, 794 88	July 1, 1876	$240 m. m. formerly. Under act of July 12, 1876.	211
12 by 8, f. f., a. 1...	6	55 80	58 00	8, 035 76	8, 352 58	July 1, 1876	Main route; branches $45. Under act of July 12, 1876.	212
11 by 6, f. f., a. 1...	12*	54 90	50 00	2, 525 40	2, 300 00	July 1, 1876	Under act of July 12, 1876.	213
14 by 7.4, f. f., a. 1	6	54 90	50 00	1, 855 62	1, 690 00	July 1, 1876	Branch; main route $69.30, $40.50, (154, 318.) Under act of July 12, 1876.	214
12 by 7.1, f. f., a. 1 .	12	54 90	55 00	4, 007 70	4, 015 00	July 1, 1876	Under act of July 12, 1876.	215
14 by 7.6, a. 1	7	54 00	75 00	9, 873 90	16, 425 25	July 1, 1876	63.8 miles formerly at $117.50. Under act of July 12, 1876. Land-grant road.	216
15 by 7.3, f. f., a. 1 .	7	54 00	75 00	12, 825 00	17, 812 50	July 1, 1876	54 days, 24 from March 15 and 30 from May 15, 1876. Under act of July 12, 1876. Land-grant road.	217
10 by 6.6, f. f., a. 1	6	54 00	52 50	2, 376 00	2, 310 00	July 1, 1876	Under act of July 12, 1876.	218
14 by 7.2, f. f., a. 1	6	54 00	52 00	5, 103 00	4, 914 00	July 1, 1876	...do	219
13 by 8.3, f. f., a. 1	12	54 00	75 00	2, 214 00	3, 075 00	July 1, 1876	In March, 1876. Under act of July 12, 1876.	220
13 by 9, f. f., a. 1...	6	54 00	50 00	1, 755 00	1, 625 00	July 1, 1876	Under act of July 12, 1876.	221
9.6 by 6 6, f. f., a. 1	13	54 00	50 00	3, 056 40	2, 830 00	July 1, 1874	In Oct., 1875. Ordered Feb., 1876.	222
10.8 by 9, fixtures, a. 1.	6	54 00	.....	.....	.....	Aug. 1, 1875	In Mar., 1876. New; ordered May, 1876.	223
10.3 by 7.2, fixtures, a. 1.	6	53 10	55 00	4, 993 53	5, 225 00	July 1, 1876	.96 mile decrease. Under act of July 12, 1876.	224
11.10 by 8, f. f., a. 1	12	53 10	50 00	6, 085 26	5, 730 00	July 1, 1876	Under act of July 12, 1876.	225
12 by 7.8, f. f., a. 1	6	53 10	58 00	5, 787 90	6, 322 00	July 1, 1876	...do	226
20 by —, f. f., a. 1..	6	53 00	50 00	2, 166 64	2, 025 00	July 1, 1875	In Oct., 1875. .38 mile increase. Ordered Dec., 1875.	227
12 by 9, f. f., a. 1 ..	12	53 00	50 00	1, 208 40	1, 140 00	July 1, 1873	In Aug., 1875. Ordered Oct., 1875.	228
10.3 by 8.3, 3.6 by 3.6, f. f., a. 1.	6	52 20	57 00	6, 123 58	6, 515 67	July 1, 1876	3 miles increase. Weight to Old Fort, 3 miles less. Under act of July 12, 1876.	229

F.—*Table showing the re-adjustment of the rates of pay per mile on railroad-rout*

Order.	State.	Number of route.	New number of route.	Termini.	Corporate title of company carrying the mail.	Length of route.	Average weight of mails whole distance per day.	Miles per hour.
						Miles.	*Pounds.*	
230	Utah	41002	.....	Provo City, York	Utah Southern	27	235	15
231	Ill	23050	.....	Robinson, Danville	Paris and Danville	82.38	233	18
232	Ohio	9037	21033	Springfield, Columbus	Cincinnati, Sandusky and Cleveland.	45.86	228	30
233	N. Y.	1811	.....	Rochester, Charlotte	New York Central and Hudson River.	9	225	25
234	N. Y.	1223	.....	Schenectady, Ballston	Delaware and Hudson Canal Company.	16	224	30
235	S. C.	14010	14010	Port Royal, Augusta	Port Royal	112.2	306	20
236	Ohio	9034	21030	Dayton, Richmond	Pittsburgh, Cincinnati and Saint Louis.	42	286	25
237	N. C	13012	13012	Greensboro', Salem	Northwestern North Carolina	29.31	284	14
238	Md	3513	10012	Clayton, Chestertown	Kent County	30.80	280	16
239	Me	231	.....	West Waterville, North Anson.	Somerset	25.7	220	20
240	Mich	24008	.....	Jackson, Fort Wayne	Fort Wayne, Jackson and Saginaw.	96.82	220	22
241	Ky	9796a	20013	Anchorage, Shelbyville.	Louisville, Cincinnati and Lexington.	19	217	20
242	Del	3406	9506	Georgetown, Selbyville.	Breakwater and Frankford	19.30	203	14
243	Iowa	27016	.....	Washington, Oskaloosa.	Chicago, Rock Island and Pacific.	54.01	202	24
244	N. Y.	1295	.....	New York, Babylon	Southern, of Long Island	36.25	185	20
245	Wis	25026	.....	Eau Claire, Chippewa Falls.	Chippewa Falls and Western	11.67	183	25
246	Md	3517	.....	Selbyville, Stockton	Worcester	31.44	181	14
247	N. Y.	1812	.....	Rhine Cliff, Boston Corner.	Rhinebeck and Connecticut	35.2	179	18
248	Vt	532	.....	White River Junction, Woodstock.	Woodstock	14.53	176	18
249	Miss	7004	18004	Artesia, Columbus	Mobile and Ohio	14	171	9
250	N. Y.	1296	.....	Flushing, Whitestone	Flushing, North Side and Central.	3.12	163	25
251	Mich	24036	.....	Grosse Isle, Fayette	Chicago and Canada Southern	70.30	160	25
252	Ill	23048	.....	Terre Haute, Peoria	Illinois Midland	179.93	160	27
253	N. J	2124	.....	Newark, Mont Clair	Newark and Bloomfield	5.67	157	25
254	Ill	23043	.....	Streator, Altamont	Chicago and Paducah	156.80	152	20
255	Cal	46016	.....	Saucelito, Tomales	North Pacific Coast	49.18	148	16
256	Ill	23029	.....	Urbana, Havana	Indianapolis, Bloomington and Western.	102.70	144	20
257	N. Y.	1296	.....	Bayside, Manhasset	Flushing, North Side and Central.	3.03	144	2[illegible]
258	N. Y.	1810	.....	Bath, Hammondsport	Bath and Hammondsport	9.4	139	1[illegible]

in States in which the contract-term expired June 30, 1876, *&c.*—Continued.

Size, &c., of mail-car or apartment.	Trips per week.	Pay per mile per annum.	Former pay per mile per annum.	Amount of annual pay.	Former amount of annual pay.	Date of re-adjustment or adjustment.	Remarks.	Order.
Feet and inches.		*Dolls.*	*Dolls.*	*Dolls.*	*Dolls.*			
15 by 8.9, f. f., a. l.	7	52 00	.....	.....	.....	Dec. 16, 1875	In July, 1875. Extension. New; ordered Oct., 1875.	230
12 by 7, fixtures, a. l.	6	52 00	.....	.....	.....	Oct. 1, 1875	New; ordered Mar., 1876.	231
16 by 8.6, f. f. and m. c., a. l.	6	52 00	50 00	2,384 72	2,293 00	Jan. 1, 1875	In April, 1875. Ordered Feb., 1876	232
h. c.; no r. a	12	52 00	.....	.....	.....	Oct. 1, 1875	In Nov., 1875. New; ordered Mar., 1876	233
no r. a	6	52 00	50 00	832 00	800 00	July 1, 1873	60 days, in May and Aug., 1875. Ordered Nov., 1875.	234
10.6 by 6.10., f. f., a. l.	6	51 30	50 00	5,755 86	5,614 00	July 1, 1876	51 days, 21 from Mar. 15 and 30 from May 15, 1876. .08 mile decrease. Under act of July 12, 1876.	235
14 by 8.7, f. f., a. l.	12	51 30	65 00	2,154 60	2,730 00	July 1, 1876	Under act of July 12, 1876.	236
21 by 8.2, f. f., a. l.	6	51 30	50 00	1,503 60	1,465 50	July 1, 1876	...do	237
16 by 6, f. f., a. l.	6	51 30	75 00	1,580 04	2,107 50	July 1, 1876	11.25 miles formerly at $57. Under act of July 12, 1876.	238
12.6 by 6.6, f. f., a. l.	6	51 00	50 00	1,310 70	1,285 00	Jan. 10, 1876	In March, 1876	239
10.4 by 7.2, f. f., a. l.	6	51 00	57 00	4,937 82	5,518 74	July 1, 1875	In April, 1875. Ordered Nov., 1875.	240
r. a in b. c., d. l.	12	51 00	50 00	969 00	950 00	July 1, 1873	In Aug., 1875. Ordered Nov., 1875.	241
7 by 7, fixtures, a. l.	6	50 00	.....	.....	.....	Jan. 16, 1875	New; ordered June, 1876.	242
10 by 9, f. f., a. l.	6	50 00	.....	.....	.....	Feb. 16, 1876	In July, 1876. New; ordered Aug., 1876.	243
12 by 6, f. f., a. l.	12	50 00	.....	.....	.....	Nov. 1, 1874	In Aug., 1875. New; ordered Nov., 1875.	244
h. c.; no r. a	12	50 00	.....	.....	.....	Feb. 1, 1875	In May, 1876 New; ordered June, 1876.	245
7 by 7, fixtures, a. l.	6	50 00	.....	.....	.....	Nov. 1, 1875	In Mar., 1876. New; ordered June, 1876.	246
7 by 6, f. f., a. l.	6	50 00	.....	.....	.....	Jan. 1, 1876	New; ordered May, 1876. In March, 1876.	247
h. c.; no r. a	12	50 00	.....	.....	.....	Nov. 1, 1875	In Jan., 1876. New; ordered Mar., 1876.	248
in h. c.; no r. a ...	14	50 00	60 00	700 00	840 00	July 1, 1873	In Oct., 1875. Ordered Nov., 1875. Branch; main route $82, (127.)	249
12 by 6, f. f., a. l.	12	50 00	.....	.....	.....	Nov. 1, 1874	Branch; main route $57, (204.) In Aug., 1875. New; ordered Nov., 1875.	250
10.9 by 9.3, f. f., a. l.	6	50 00	.....	.....	.....	Jan. 16, 1874	New; ordered Oct., 1875.	251
11.3 by 8.8, f. f., a. l.	6	50 00	.....	.....	.....	Mar. 16, 1875	In Apr., 1875 New; ordered Nov., 1875.	252
no apt.; no r. a ...	12	50 00	48 60	283 50	275 56	July 1, 1873	In July, 1874; reported Nov 1, 1875. Ordered Dec., 1875.	253
12 by 8, f. f., a. l.	6	50 00	.....	.....	.....	Oct. 16, 1874	New; ordered Nov., 1875	254
11 by 6, fixtures, a. l.	6	50 00	.....	.....	.....	Apr. 20, 1875	In May, 1876. New; ordered July, 1876.	255
10 by 7, furniture, a. l.	6	50 00	40 00	5,135 00	4,108 00	July 1, 1874	In Nov., 1875. Ordered Dec., 1875 Main route; branch $45, (298.)	256
no r. a	12	50 00	.....	.....	.....	Nov. 1, 1874	Branch; main route $57, (204.) In Aug., 1875. New; ordered Nov., 1875.	257
in b. c	15*	50 00	.....	.....	.....	Sept. 15, 1875	New; ordered May, 1876.	258

F.—*Table showing the re-adjustment of the rates of pay per mile on railroad*

Order.	State.	Number of route.	New number of route.	Termini.	Corporate title of company carrying the mail.	Length of route.	Average weight of mails whole dis.
						Miles.	*Pou*
259	Pa....	2496	8094	York, Delta	Peach Bottom.....	35.56	1
260	Mass	755	.....	North Brookfield, East Brookfield.	Boston and Albany Railroad Company, (lessees North Bloomfield Railroad.)	4.41	1
261	Wis ..	25025	.....	Galena, Platteville...	Galena and Southern Wisconsin.	30.69	1
262	N. Y..	1288	.....	Theresa Junction, Clayton.	Utica and Black River	16.25	1
263	Oreg..	44002	.....	Portland, Saint Joseph.	Oregon Central.....	48.61	1
264	Pa....	2500	.....	New Castle, Stoneborough.	New Castle and Franklin.....	36.5	1
265	S. C...	5602	14001	Cokesbury, Abbeville Court House.	Greenville and Columbia.....	11.81	1
266	Cal ...	46015	.....	Elmira, Winters.....	Vaca Valley.....	18	1
267	S. C...	5602	14001	Belton, Anderson Court House.	Greenville and Columbia.....	10.01	
268	Md ...	3520	.....	Emmittsburgh, Rocky Ridge.	Emmittsburgh	7	
269	Ohio..	9052	21048	Dyson's, Cumberland	W. H. and C. B. Stevens, proprietors of the Eastern Ohio Railroad.	7.8	
270	Mass .	754	.....	New Bedford, Fall River.	Fall River.....	15	
271	Mass .	753	.....	Ashburnham Depot, Ashburnham.	Ashburnham	2.89	
272	W. Va	12005	.....	Ritchie Court-House, Pennsborough.	Pennsborough and Harrisville	9	
273	Ga....	6088	15017	Fort Valley, Perry...	Southwestern	13.32	
274	N. C ..	5216	13011	Sandford, Egypt Depot.	Western	7	
275	Pa....	2493	.....	Phillipsburgh, Morrisdale Mines.	Pennsylvania	3.69	
276	Pa....	2492	.....	Antestown, Lloydville.	Bell's Gap.....	8.82	
277	N. C ..	13003	13003	Wilmington, Charlotte.	Carolina Central.....	195.90	2
278	Ohio..	9026	21022	Dayton, Union City..	Dayton and Union.....	48.17	2
279	Ky ...	20017	20017	Lexington, Mount Sterling.	Louisville, Cincinnati and Lexington.	33.84	2
280	Pa....	2431	8031	Columbia, Sinking Springs.	Reading and Columbia	39.70	2
281	Ohio..	9024	21020	Fremont, Saint Mary's.	Lake Erie and Louisville.....	89.35	2
282	Ind ...	22027	22028	Rockville, Logansport.	Logansport, Crawfordsville and Southwestern.	92.10	2
283	Ohio..	9041	21037	Niles, New Lisbon...	Atlantic and Great Western ..	33.94	2
284	Ohio..	9050	21046	Painesville, Youngstown.	Painesville and Youngstown ..	60.12	2
285	Miss..	18003	18003	Jackson, Meridian...	Vicksburg and Meridian	95.2	3

in States in which the contract-term expired June 30, 1876, *&c.*—Continued.

Size, &c., of mail-car or apartment.	Trips per week.	Pay per mile per annum.	Former pay per mile per annum.	Amount of annual pay.	Former amount of annual pay.	Date of re-adjustment or adjustment.	Remarks.	Order.
Feet and inches.		*Dolls.*	*Dolls.*	*Dolls.*	*Dolls.*			
8.6 by 7.3, fixtures, a. l.	6	50 00	.....	.....	.....	Jan. 20, 1876	In Mar., 1876. New; ordered May, 1876.	259
in b. c.	24	50 00	.....	.....	.....	Jan. 17, 1876	....do	260
13 by 7, f. f., a. l	6	50 00	.....	.....	.....	June 1, 1875	In Jan., 1876. New; ordered Mar., 1876.	261
in charge of baggage-master.	12	50 00	.....	.....	.....	Mar. 15, 1875	Part; residue $75, (144;) branch $57, (205.) New; ordered May, 1876.	262
8 by 8, f. f., a. l	6	50 00	.....	.....	.....	Apr. 1, 1875	In Sept., 1875. New; ordered Nov., 1875.	263
11 by 3.10, f. f., a. l	6	50 00	.....	.....	.....	July 1, 1875	In Dec., 1875. New; ordered Jan., 1876.	264
in charge of conductor.	6	50 00	30 00	590 50	345 00	July 1, 1875	Branch; main route $58, (199.) .31 mile increase. Under contract to June 30, 1875. Ordered Nov., 1875.	265
in b. c.; no r. a	7	50 00	.....	.....	.....	Jan. 16, 1876	In Aug., 1876. New; ordered Sept., 1876.	266
12 by 7, f. f., a. l	6	50 00	30 00	500 50	292 50	July 1, 1875	In Oct., 1875. Ordered November, 1875. Branch; main route $58, (199.) .26 mile increase. Under contract to June 30, 1875.	267
in express-car	12	50 00	.....	.....	.....	Dec. 5, 1875	In Jan., 1876. New; ordered Feb., 1876.	268
8 by 4, f. f.; no r. a	12	50 00	.....	.....	.....	Jan. 16, 1875	New; ordered Sept., 1876. In July, 1876.	269
in b. c.	18	50 00	.....	.....	.....	Dec. 15, 1875	In Mar., 1876. New; ordered May, 1876.	270
no apt.; no r. a	12	50 00	.....	.....	.....	July 1, 1875	In Mar., 1876. New; ordered April, 1876.	271
10 by 7.4; no r. a	12	50 00	.....	.....	.....	Jan. 1, 1876	In May, 1876. New; ordered Aug., 1876.	272
3 by 4; no r. a	6	50 00	.....	.....	.....	Feb. 1, 1874	In Oct., 1875. New; ordered Feb., 1876.	273
no r. a	6	50 00	21 00	350 00	147 00	July 1, 1875	In August, 1875. Branch; main route $50. Ordered Oct., 1875.	274
b. c.; no r. a	6	50 00	.....	.....	.....	Oct. 1, 1874	In Aug., 1875. New; ordered Oct., 1875.	275
7 by 6.6; no r. a	6	50 00	.....	.....	.....	Oct. 1, 1874	In Aug., 1875. New; ordered Nov., 1875.	276
14 by 8.11, f. f., a. l	13	49 50	55 00	9,697 05	10,431 30	July 1, 1876	6.24 miles increase. In Dec., 1875. Under act of July 12, 1876.	277
11 by 7.4, f. f., a. l.	12	49 50	60 00	2,384 42	2,890 20	July 1, 1876	Under act of July 12, 1876.	278
8.6 by 6, f. f., a. l., and b. c.	12	48 60	50 00	1,644 63	1,692 00	July 1, 1876	....do	279
7.4 by 6.6, f. f., a. l	18	48 60	50 00	1,929 42	1,985 00	July 1, 1876	....do	280
12 by 7, fixtures, a. l	6	47 70	50 00	4,262 00	4,467 50	July 1, 1876	....do	281
12 by 8.9, f. f., a. l.	6	47 70	50 00	4,393 17	4,605 00	July 1, 1876	....do	282
13.3 by 7.3, f. f., a. l	6	47 70	50 00	1,618 94	1,697 00	July 1, 1876	....do	283
12 by 6, f. f., a. l	6	46 80	40 00	2,813 62	2,517 36	July 1, 1876	9.38 miles formerly at $52. Under act of July 12, 1876.	284
12 by 7.2, f. f., a. l.	7	46 08	59 00	4,386 81	5,616 80	July 1, 1876	Part; residue $64.80, (172.) Under act of July 12, 1876. Land-grant road.	285

F.—*Table showing the re-adjustment of the rates of pay per mile on railroa*

Order.	State.	Number of route.	New number of route.	Termini.	Corporate title of company carrying the mail.	Length of route.	Average weight of mails which the
						Miles.	*Pou*
286	Ala...	17003	17003	Montgomery, Eufaula	Montgomery and Eufaula	81.24	
287	Ohio..	9019	21017	Blanchester, Hillsborough.	Marietta and Cincinnati.....	21	
288	Ala...	17002	17002	Montgomery, Selma..	Western, of Alabama	50	
289	N. C ..	13010	13010	Raleigh, Cameron....	Raleigh and Augusta Air Line	58.78	
290	S. C...	14006	14006	Florence, Cheraw....	Cheraw and Darlington	40.88	
291	N. J ..	2113	7021	Elmer, Salem	West Jersey	16.60	
292	Ohio..	9039	21035	Youngstown, Cross Cut.	Pittsburgh, Fort Wayne and Chicago.	22.8	
293	Ky ...	20013	20013	Anchorage, Shelbyville.	Shelby	19	
294	Ind ...	22011	22011	Cambridge City, Columbus.	Jeffersonville, Madison and Indianapolis.	68	
295	Ga....	15009	15009	Dupont, Bainbridge..	Atlantic and Gulf	106.37	
296	Ga....	15018	15018	Thomasville, Albany.	Atlantic and Gulf	58.91	
297	S. C...	14009	14009	Anderson C. H., Walhalla.	Greenville and Columbia	35.06	
298	Ill	23029	.....	White Heath, Decatur.	Indianapolis, Bloomington and Western.	32.35	
299	Ga...	6146	15022	Griffin, Carrollton ...	Savannah, Griffin and North Alabama.	59.86	
300	Ill	23054	.....	Chicago, Byron	Chicago and Pacific	92.75	
301	Pa....	2461	8061	Towanda, Bernice....	Sullivan and Erie Coal and Railroad Company.	29.32	
302	N. C ..	5213	13009	Charlotte, Statesville	Atlantic, Tennessee and Ohio..	49.38	
303	Ala...	6611	17011	Gainesville, Gainesville Junction.	Mobile and Ohio	22	
304	Pa....	2494	.....	Reading, Statington..	Philadelphia and Reading, (lessees Berks County Railroad.)	43.32	
305	Pa....	2489	.....	Hollidaysburgh, Royer.	Pennsylvania.....	21.25	
306	Ala...	17005	17005	Moscow, Somerville..	Memphis and Charleston.....	14.5	
307	Ohio..	9010	21009	Oneida Mills, Carrollton.	Ohio and Toledo.....	12	
308	Ill ...	23032	.....	McLeansboro', Shawneetown.	Saint Louis and Southeastern..	41.25	
309	Pa....	2495a	.....	Larabee's, Clermont.	McKean and Buffalo.....	23.3	
310	N. Y..	1802	.....	Quaker Street, Schenectady.	Delaware and Hudson Canal Company.	15	
311	N. Y..	1803	.....	Nineveh Junction, Jefferson Junction.	.....do.....	21	
312	Fla ...	16003	16003	Pensacola, Whiting Junction.	Pensacola and Louisville	44.05	

in States in which the contract-term expired June 30, 1876, *&c.*—Continued.

Size, &c., of mail-car or apartment.	Trips per week.	Pay per mile per annum.	Former pay per mile per annum.	Amount of annual pay.	Former amount of annual pay.	Date of re-adjustment or adjustment.	Remarks.	Order.
Feet and inches.		*Dolls.*	*Dolls.*	*Dolls.*	*Dolls.*			
9.5 by 6.6, f. f., a. l.	7⅞*	45 90	50 00	3,728 91	4,062 00	July 1, 1876	48 days, 18 from Mar. 15 and 30 from May 15, 1876. Under act of July 12, 1876.	286
h. c.; no r. a.....	12	45 90	81 00	963 90	1,701 00	July 1, 1876	Under act of July 12, 1876.	287
13 by 8.6, f. f., a. l	7	45 00	54 00	2,250 00	2,700 00	July 1, 1876	45 days, 15 from Mar. 15 and 30 from May 15, 1876. Under act of July 12, 1876.	288
11.2 by 9, f. f., a. l	6	45 00	53 00	2,645 10	3,076 34	July 1, 1876	Weight to Sanford, 45.78 miles. 13 miles formerly at $50.	289
13 by 9.9, f. f., a. l.	6	45 00	53 00	1,839 60	2,166 64	July 1, 1876	Under act of July 12, 1876.	290
10.7 by 6.6; no r. a	12	45 00	60 24	747 00	999 98	July 1, 1876	In Mar., 1876. Under act of July 12, 1876.	291
9.4 by 8.10, fixtures, a. l.	6	45 00	53 00	1,026 00	1,208 40	July 1, 1876	Under act of July 12, 1876.	292
12 by 5, fixtures, a. l.	12	45 00	51 00	855 00	969 00	July 1, 1876	....do	293
11 by 6, f. f., a. l ..	6	45 00	40 00	3,060 00	2,720 00	July 1, 1876	....do	294
12 by 7, (av.,) f. f., a. l.	7	45 00	58 00	4,786 65	6,175 84	July 1, 1876	Branch; main route $118.80, (88.) .11 mile decrease. Under act of July 12, 1876.	295
12 by 6, f. f., a. l...	7	45 00	62 00	2,650 95	3,768 98	July 1, 1876	1.88 miles decrease. Under act of July 12, 1876.	296
12 by 8, f. f	6	45 00	40 00	1,577 70	1,360 00	July 1, 1876	1.06 miles increase. Under act of July 12, 1876.	297
8 by 4, furniture, a. l.	6	45 00	40 00	1,455 75	1,294 00	July 1, 1874	Branch; main route $50, (256.) In Nov., 1875. Ordered Dec., 1875.	298
8.6 by 4.6, f. f., a. l.	6	45 00	30 00	2,693 70	1,830 00	July 1, 1875	In Dec., 1875. 1.14 miles decrease. Ordered Feb., 1876.	299
22.4 by 10, f. f., a. l.	6	45 00	.....	.....	.....	July 1, 1875	In Jan., 1876. New; ordered Mar., 1876.	300
8.3 by 7.3, fixtures, a. l.	6	45 00	.....	.....	.....	July 1, 1873	New; ordered July, 1876.	301
9 by 8, f. f., a. l....	6	45 00	40 00	2,222 10	1,940 40	July 1, 1875	In Oct., 1875. .87 mile increase. Ordered Dec., 1875.	302
in h. c.; no r. a...	7	45 00	50 00	990 00	1,100 00	July 1, 1873	In October, 1875. Ordered Nov., 1875.	303
6.9 by 5.2, f. f., a. l.	6	45 00	.....	.....	.....	Oct. 1, 1874	In Aug., 1875. New; ordered Oct., 1875.	304
h. c.; no r. a.....	9.8*	45 00	.....	.....	.....	July 1, 1874	In Aug., 1875. New; ordered Oct., 1875.	305
in h. c.; no r. a...	7	45 00	30 00	652 50	435 00	July 1, 1876	Branch; main route $99, (108.) Under act of July 12, 1876.	306
12 by 10; no r. a..	6	45 00	41 66	540 00	500 00	July 1, 1876	Under act of July 12, 1876.	307
12 by 6.6, f. f., a. l.	6	45 00	50 00	1,856 25	2,062 50	July 1, 1875	Branch; main route $84, (125.) In Mar., 1875. Reported October, 1875. Ordered Oct., 1875.	308
9 by 5.6, (av.,) fixtures, a. l.	6	45 00	.....	.....	.....	Aug. 16, 1875	New; ordered May, 1876.	309
no apt	6	45 00	.....	.....	.....	Mar. 15, 1875	60 days, in May and Aug., 1875. New; ordered Nov., 1875.	310
7 by 7, a. l.....	6	45 00	.....	.....	.....	Mar. 15, 1875	In May, 1875. New; ordered Nov., 1875.	311
7.6 by 7, f. f., a. l...	13	43 20	50 00	1,902 96	2,202 50	July 1, 1876	.05 m. increase. Under act of July 12, 1876. Land-grant road.	312

F.—*Table showing the re-adjustment of the rates of pay per mile on railroa*

Order.	State.	Number of route.	New number of route.	Termini.	Corporate title of company carrying the mail.	Length of route.	Average weight of mails whole rte.
						Miles.	*Pou*
313	Ind...	22032	22033	Frankfort, Kokomo..	Frankfort and Kokomo.....	25.5	
314	Tenn.	19011	19011	Knoxville, Caryville.	Knoxville and Ohio.....	38.94	
315	Ky...	20006	20006	Bardstown Junction, Bardstown.	Louisville and Nashville	17.3	
316	Ala...	17017	17017	Selma, Pine Apple...	Selma and Gulf.....	43.19	
317	S. C...	14003	14003	Kingsville, Camden..	South Carolina	39.25	
318	Ky...	20007	20007	Richmond Junction, Fish Point.	Louisville and Nashville	33.5	
319	Ohio..	9054	21050	Athens, Scott's Landing.	Marietta and Cincinnati.....	37	
320	Ala...	17016	17016	Opelika, Goodwater..	Savannah and Memphis.....	59.65	
321	Ohio..	9040	21036	Logansport. New Straitsville.	Columbus and Hocking Valley.	13.02	
322	Ala...	17008	17008	Columbus, Troy	Mobile and Girard.....	90	
323	N. J ..	2118	.....	Greensburgh Station, New Brunswick.	Pennsylvania.....	29.13	
324	Ala...	6617	17017	Selma, Pine Apple...	Selma and Gulf.....	43.19	
325	Miss..	7009	18009	Durant, Kosciusko...	New Orleans, Saint Louis and Chicago, (operating Mississippi Central.)	21.57	
326	Minn..	26017	.....	Mankato, Wells.....	Central, of Minnesota.....	41.06	
327	N. J ..	2120	.....	New Bridge, Stony Point.	New Jersey and New York....	27.18	
328	Ga....	6012	15013	Cochran, Hawkinsville.	Macon and Brunswick	10	
329	Pa....	2485	.....	Mechanicsburgh, Dillsburgh.	Cumberland Valley	8.85	
330	Ala...	6614	17014	Opelika, Buffalo.....	East Alabama and Cincinnati..	22.50	
331	Pa....	2498	.....	Oxford, Goshen.....	Peach Bottom	16.75	
332	Md ...	3519	.....	Lake Roland, Western Maryland Railroad Junction.	Northern Central.....	8.5	
333	Miss..	7007	18007	Muldon, Aberdeen...	Mobile and Ohio.....	9	
334	Ohio..	9042	21038	Newark, Shawnee ...	Newark, Somerset and Straitsville.	44.045	
335	Ala...	17021	17021	Eufaula, Clayton.....	Vicksburgh and Brunswick....	22.5	
336	Ga....	15017	15017	Fort Valley, Perry...	Southwestern.....	13.32	
337	Ind...	22033	.....	Rockport, Huntingburg.	Cincinnati, Rockport and Southwestern.	31.02	

in States in which the contract-term expired June 30, 1876, *&c.*—Continued.

Size, &c., of mail-car or apartment.	Trips per week.	Pay per mile per annum.	Former pay per mile per annum.	Amount of annual pay.	Former amount of annual pay.	Date of re-adjustment or adjustment.	Remarks.	Order.
Feet and inches.		*Dolls.*	*Dolls.*	*Dolls.*	*Dolls.*			
10.10 by 7.2, f. f., a. l.	12	43 20	40 00	1,101 60	1,020 00	July 1, 1876	Under act of July 12, 1876.	313
6.2 by 3, fixtures, a. l.	6	40 50	40 00	1,577 07	1,557 60	July 1, 1876	... do	314
b. c.; no r. a.....	7	40 50	40 00	700 65	692 00	July 1, 1876	....do	315
7.3 by 6, f. f., ½ l..	4	40 50	40 00	1,749 20	1,727 60	July 1, 1876	48 days, 18 from Mar. 15 and 30 from May 15, 1876. Under act of July 12, 1876.	316
in charge of conductor.	6	40 50	50 00	1,589 63	1,897 50	July 1, 1876	Branch; main route $63, (177.) 1.3 m. increase. Under act of July 12, 1876.	317
b. c.....	6	40 50	54 00	1,356 75	1,809 00	July 1, 1876	Main route; part; res. $69.30, (154;) branch $54.90, (214.) Under act of July 12, 1876.	318
14.6 by 9.6, f. f., a. l.	6	40 50	50 00	1,498 50	1,850 00	July 1, 1876	Under act of July 12, 1876.	319
8.2 by 7, f. f., a. l..	6	40 50	50 00	2,415 83	2,858 80	July 1, 1876	12.37 miles formerly at $40. In March, 1876. Under act of July 12, 1876.	320
in b. c.; no r. a...	15*	40 50	40 00	527 31	520 80	July 1, 1876	Branch; main route $62.10, (182.) Under act of July 12, 1876.	321
13 by 7, f. f., a. l...	6	40 32	50 00	3,628 80	4,500 00	July 1, 1876	49 days, 19 from Mar. 15 and 30 from May 15, 1876. 7 trips from Aug. 1, 1876. Under act of July 12, 1876. Land-grant road.	322
in b. c.; no r. a...	6	40 00	.....	.....	.....	Mar. 1, 1875	In Oct., 1875. New; ordered Feb., 1876.	323
7.3 by 6, fixtures, ½ l.	4	40 00	50 00	1,727 60	2,159 50	July 1, 1875	In Oct., 1875. Under contract to June 30, 1875. Ordered Dec., 1875.	324
b. c.; no r. a.....	6	40 00	.....	.....	.....	Oct. 1, 1874	In Oct., 1875. New; ordered Dec., 1875.	325
8.3 by 7, f. f., a. l...	6	40 00	.....	.....	.....	Mar. 1, 1875	In Oct., 1875. New; ordered Jan., 1876.	326
b. c.; no r. a.....	6	40 00	.....	.....	.....	Nov. 1, 1875	In Mar., 1876. New; ordered May, 1876.	327
no r. a.....	6	40 00	50 00	400 00	500 00	July 1, 1875	In Oct., 1875. Br'ch; main route $65, (170.) Under contract to June 30, 1875. Ordered Dec., 1875.	328
locked box in b. c.	6	40 00	.....	.....	.....	Dec. 16, 1873	In Aug., 1875. New; ordered Feb., 1876.	329
8 by 4, f f., a. l....	6	40 00	30 00	900 00	675 00	July 1, 1875	In Oct., 1875. Ordered Dec., 1875.	330
b. c.; no r. a.....	6	40 00	.....	.....	.....	Apr. 15, 1875	In Jan., 1876. New; ordered Mar., 1876.	331
in b. c.; no r. a...	6	40 00	.....	.....	.....	Jan. 1, 1875	New; ordered June, 1876.	332
in b. c.; no r. a...	14	40 00	50 00	360 00	450 00	July 1, 1873	In Oct., 1875. Ordered Nov., 1875.	333
14 by 9, f. f., a. l...	8¼*	36 00	75 00	1,585 62	3,303 37	July 1, 1876	Under act of July 12, 1876.	334
3 by 4, a. l.....	6	36 00	50 00	810 00	1,125 00	July 1, 1876	50 days, 20 from Mar. 15 and 30 from May 15, 1876. Under act of July 12, 1876.	335
closet 3 by 4; no r. a.	6	36 00	50 00	479 52	666 00	July 1, 1876	Under act of July 12, 1876.	336
10 by 8; in charge of conductor.	6	35 00	.....	.....	.....	Oct. 1, 1875	New; ordered May, 1876.	337

F.—*Table showing the re-adjustment of the rates of pay per mile on railroad-r*

Order.	State.	Number of route.	New number of route.	Termini.	Corporate title of company carrying the mail.	Length of route.	Average weight of mails whole distance per day.	Miles per h
						Miles.	*Pounds.*	
338	Kans	33014	.....	Fort Scott, Memphis	Fort Scott, Southwestern and Memphis.	6.52	32	12
339	Mo ...	28031	.....	Saint Louis, Normandy.	West End Narrow Gauge	10.53	27	15
340	Ga....	15024	15024	Columbus, Hamilton .	North and South.....	23.51	38	15
341	Ark ..	7525a	29003	Chicot, Pine Bluff....	Texas, Mississippi River and Northwestern.	72.78	40	12
342	Ky ...	9605	20001	Ashland, Coalton	Lexington and Big Sandy	11	34	12
343	Pa....	2499	.....	Pittsburgh, Castle Shannon.	Pittsburgh and Castle Shannon	7	15	12
344	Ark ..	7645a	29004	Chicot, Monticello ...	Texas, Mississippi River and Northwestern.	44.28	57	5
345	Fla ...	16002	16002	Tallahassee, Saint Mark's.	Jacksonville, Pensacola and Mobile.	21.89	17	16
346	La....	8003	30005	Baton Rouge, Livonia	Baton Rouge, Grosse Tête and Opelousas.	28	10	10

Excess of present over former amount of annual pay, by re-adjustment.....

Amount of reductions made under act of July 12, 1876, on re-adjusted routes in this table, in on and after July 1, 1876.....

Excess, apart from reductions made under act of July 12, 1876.....

in *States in which the contract-term expired June* 30, 1876, *&c.*—Continued.

Size, &c., of mail-car or apartment.	Trips per week.	Pay per mile per annum.	Former pay per mile per annum.	Amount of annual pay.	Former amount of annual pay.	Date of re-adjustment or adjustment.	Remarks.	Order.
Feet and inches.		*Dolls.*	*Dolls.*	*Dolls.*	*Dolls.*			
in h c	6	35 00	.....	.....	.....	July 1, 1875	In March, 1876. $100 m. m. New; ordered April, 1876.	338
in h c.; no r. a	6	35 00	.....	.....	.....	Jan. 1, 1876	In May, 1876. New; ordered Sept., 1876.	339
16 by 7; no r. a	6	31 50	45 00	740 57	1,057 95	July 1, 1876	Under act of July 12, 1876.	340
8 by 6, f. f., a. l.	3	30 00	45 00	2,183 40	3,275 10	July 1, 1875	In March, 1875. Ordered Jan., 1876.	341
locked box; no r. a.	6	30 00	29 54	330 00	324 94	July 1, 1874	In April, 1875. Ordered Oct., 1875.	342
no r. a	6	30 00	.....	.....	.....	Apr. 1, 1875	New; ordered Sept., 1876.	343
no r. a	2	20 00	40 00	885 60	1,771 20	July 1, 1875	In March, 1875. Ordered Jan., 1876.	344
no apt.; in charge of conductor.	3	20 00	30 00	437 80	656 70	July 1, 1875	60 days, ½ from Nov. 15, 1875, and residue from Jan. 1, 1876 Branch; main route $80, (132.) Ordered Feb., 1876.	345
In passenger-car	3	20 00	12 86	560 00	360 08	July 1, 1875	In Sept., 1875. Ordered Dec., 1875.	346
				4,999,280 67	4,963,152 70			
				4,963,152 70	.....			
.....				36,127 97	.....			
case of re-adjustments taking effect				170,430 52	.....			
.....				206,558 49	.....			

THOS. J. BRADY,
Second Assistant Postmaster-General.

Index to Table F.

Title.	Order.	Number of route.	New number of route.
Adirondack	148	1804	.....
Alabama Central	188	17009	17009
Do	189	17009	17009
Arkansas Valley	190	38005	.....
Ashburnham	271	753	.....
Atchison and Nebraska	141	33009	.....
Atchison, Topeka and Santa Fé	137	33013	.....
Atlanta and Richmond Air Line	128	15001	15001
Atlantic and Great Western	113	9006	21005
Do	120	9038	21034
Do	186	9006	21005
Do	283	9041	21037
Atlantic and Gulf	86	6008	15009
Do	88	15009	15009
Do	184	6016	15018
Do	198	6008	15009
Do	295	15009	15009
Do	296	15018	15018
Atlantic and North Carolina	224	13005	13005
Atlantic and West Point	61	15003	15003
Atlantic, Tennessee and Ohio	302	5213	13009
Baltimore and Ohio	10	3503	.....
Do	14	3503	.....
Do	17	3504	10003
Do	23	3504	10003
Do	27	12002	.....
Do..(lessees Sandusky, Mansfield and Newark)	30	9011	.....
Do	49	9011	.....
Do	114	9011	.....
Do	145	9011	21019
Do..(operating Baltimore, Pittsburgh and Chicago R. R.)	35	9051	.....
Do.....do	46	9051	.....
Baltimore and Potomac	11	3514	.....
Do	16	3514	.....
Bath and Hammondsport	258	1810	.....
Baton Rouge, Grosse Tête and Opelousas	346	8003	30005
Bell's Gap	276	2492	.....
Berks County. (See Philadelphia and Reading.)			
Boston and Albany, (lessees North Bloomfield R. R.)	260	755	.....
Breakwater and Frankford	242	3406	9506
Buffalo and Jamestown	179	1290	.....
Cairo and Saint Louis	209	23053	.....
Carolina Central	277	13003	13003
Cayuga	183	1284	.....
Central, of Minnesota	326	26017	.....
Central, of New Jersey	69	2101	7001
Do	158	2258	7003
Central Ohio	28	9001	21001
Do	112	9001	21001
Central Pacific	18	46001	.....
Central Railroad and Banking Company	123	15012	15012
Do	155	15010	15010
Do	162	15005	15005
Charlotte, Columbia and Augusta	101	13007	13007
Cheraw and Darlington	227	5608	14006
Do	290	14006	14006
Chicago and Canada Southern	251	24036	.....
Chicago and Iowa	109	11913	23036
Chicago and Pacific	300	23054	.....
Chicago and Paducah	254	23043	.....
Chicago, Burlington and Quincy	50	23010	.....
Do	110	27011	.....
Do	134	27011	.....
Chicago, Cincinnati and Louisville	215	22014	22015
Chicago, Rock Island and Pacific	243	27016	.....
Chippewa Falls and Western	245	25026	.....
Cincinnati, Hamilton and Dayton	59	9030	21026
Do	75	9030	21026
Cincinnati, Hamilton and Indianapolis	202	9028	21
Cincinnati, La Fayette and Chicago	37	22028	22
Cincinnati, Richmond and Chicago	129	9029	21
Cincinnati, Rockport and Southwestern	337	22033	....
Cincinnati, Sandusky and Cleveland	122	9013	21
Do	232	9037	21
Cleveland and Pittsburgh	90	9003	21
Do	91	9003	21
Do	221	9009	21
Cleveland, Columbus, Cincinnati and Indianapolis	32	9046	21
Do	54	9018	21
Do	116	9015	21
Cleveland, Tuscarawas Valley and Wheeling, (late Lake Shore and Tuscarawas Valley)	163	9045	21
Columbus and Hocking Valley	182	9040	21
Do	321	9040	21
Columbus and Xenia	21	9016	21
Columbus, Chicago and Indiana Central	25	9017	21
Consolidated European and North American	119	244	...
Cumberland Valley	329	2485	...
Dayton and Michigan	95	9027	21
Dayton and Union	278	9026	21
Delaware and Hudson Canal Company	58	1222	...
Do	62	1221	...
Do	64	1224	...
Do	80	1220	...
Do	99	1224	...
Do	103	1245	...
Do	106	1224	...
Do	142	1224	...
Do	234	1223	...
Do	310	1802	...
Do	311	1803	...
Delaware, Lackawanna and Western	97	2122	7
Detroit, Eel River and Illinois	219	22026	22
East Alabama and Cincinnati	330	6614	17
Eastern Ohio. (See W. H. and C. B. Stevens.)			
East Tennessee, Virginia and and Georgia	53	19002	19
Do	78	19002	19
Emmittsburgh	268	3520	...
Erie	20	1201	...
Do	79	1208	...
Erie and Pittsburgh	82	2445	..
Evansville and Crawfordsville	111	22012	2
Evansville, Terre Haute and Chicago	222	22023	2
Fall River	270	754	...
Flushing, North Side and Central	204	1206	..
Do	250	1296	..
Do	257	1296	..
Fort Scott, Southeastern and Memphis	338	33014	...
Fort Wayne, Jackson and Saginaw	157	24008	...
Do	240	24008	...
Fort Wayne, Muncie and Cincinnati	226	22019	22
Frankfort and Kokomo	313	22032	22
Galena and Southern Wisconsin	261	25025	...
Georgia	68	6001	1
Do	70	15004	1
Do	176	6006	1

Index to Table F—Continued.

Title.	Order.	Number of route.	New number of route.
Georgia	211	15007	15007
Grand Rapids and Indiana	196	22020	22021
Greenville and Columbia	199	5602	14001
Do	212	14001	14001
Do	265	5602	14001
Do	267	5602	14001
Do	297	14009	14009
Hannibal and Saint Joseph	107	28030	.....
Houston and Texas Central	84	8503	31003
Do	117	8505	31004
Do	138	8577*a*	31005
Illinois Midland	252	23048	.....
Indianapolis and Saint Louis	57	23028	.....
Indianapolis and Vincennes	207	22001	22001
Indianapolis, Bloomington and Western	256	23029	.....
Do	298	23029	.....
Indianapolis, Cincinnati and La Fayette	33	22003	22003
Do	34	22005	22005
Indianapolis, Peru and Chicago	146	22004	22004
Jacksonville, Pensacola and Mobile	132	16002	16002
Do	345	16002	16002
Jeffersonville, Madison and Indianapolis	83	22007	22007
Do	213	22006	22006
Do	294	22011	22011
Kent County	238	3513	10012
Kentucky Central	100	20002	20002
Do	185	20002	20002
Knoxville and Ohio	314	19011	19011
Lake Erie and Louisville	281	9024	21020
Lake Shore and Michigan Southern	2	1241	.....
Do	3	1241	.....
Do	6	9008	21007
Do	7	1241	.....
Do	8	9049	21045
Do	47	1241	.....
Do	48	1241	.....
Lexington and Big Sandy	342	9605	20001
Little Rock and Fort Smith	124	29005	.....
Logansport, Crawfordsville and Southwestern	282	22027	22028
Long Island	153	1234	.....
Do	223	1806	.....
Louisville and Nashville	29	20005	20005
Do	41	20008	20008
Do	42	19009	19009
Do	43	19010	19010
Do	74	19010	19010
Do	92	19006	19006
Do	104	19006	19006
Do	154	20007	20007
Do	214	20007	20007
Do	315	20006	20006
Do	318	20007	20007
Louisville, Cincinnati and Lexington	45	20004	20004
Do	55	20018	20018
Do	133	20003	20003
Do	241	9796*a*	20013
Do	279	20017	20017
Louisville, New Albany and Chicago	167	22008	22008
Louisville, Paducah and Southwestern	160	20011	20011
McKean and Buffalo	309	2495*a*	.....
Macon and Brunswick	170	6012	15013
Do	187	15013	15013
Do	328	6012	15013
Macon and Western	98	6011	15012
Marietta and Cincinnati	31	9032	21028
Do	126	9020	21018
Do	175	9053	21049
Do	287	9019	21017
Do	319	9054	21050
Maryland and Delaware	218	3403	9503
Maysville and Lexington	194	20016	20016
Memphis and Charleston	108	17005	17005
Do	306	17005	17005
Mississippi and Tennessee	169	18002	18002
Do	171	7002	18002
Mississippi Central. (See New Orleans, Saint Louis and Chicago.)			
Missouri, Kansas and Texas	52	28011	.....
Do	56	28014	.....
Mobile and Girard	322	17008	17008
Mobile and Montgomery	96	17012	17012
Mobile and Ohio	127	7004	18004
Do	201	18004	18004
Do	249	7004	18004
Do	303	6611	17011
Do	333	7007	18007
Montgomery and Eufaula	286	17003	17003
Montpelier and Wells River	152	528	.....
Morris and Essex	81	2106	7013
Do	192	2106	.....
Nashville and Chattanooga	73	19004	19004
Do	135	19007	19007
Newark and Bloomfield	253	2124	.....
Newark, Somerset and Straitsville	334	9042	21038
Newcastle and Franklin	264	2500	.....
New Jersey and New York	327	2120	.....
New Orleans, Mobile and Texas	77	17013	17013
New Orleans, Saint Louis and Chicago	65	18001	18001
Do., (operating Mississippi Central)	325	7009	18009
Newport and Wickford Railroad and Steamboat Company	200	825	.....
New York Central and Hudson River	1	1217	.....
Do	4	1211	.....
Do	71	1211	.....
Do	233	1811	.....
Northeastern	76	14005	14005
Do	94	5607	14005
North and South	340	15024	15024
Northern Central	85	1255	.....
Do	332	3519	.....
North Pacific Coast	255	46016	.....
Northwestern North Carolina	237	13012	13012
Ohio and Mississippi	40	22010	22010
Do	93	22018	22019
Ohio and Toledo	307	9010	21009
Oregon Central	263	44002	.....
Painesville and Youngstown	284	9050	21046
Paris and Danville	231	23050	.....
Peach Bottom	259	2496	8094
Do	331	2498	.....
Pennsborough and Harrisville	272	12005	.....
Pennsylvania	5	2103	7004
Do	9	2401	8001
Do	12	2401	.....
Do	118	2103	.....
Do	275	2493	.....
Do	305	2489	.....
Do	323	2118	.....
Pennsylvania Co	168	9047	21043
Pensacola and Louisville	312	16003	16003
Peoria, Pekin and Jacksonville	193	23038	.....
Philadelphia and Reading, (lessees Berks County Railroad)	304	2494	.....
Pittsburgh and Castle Shannon	343	2499	.....
Pittsburgh, Cincinnati and Saint Louis	13	9036	21032
Do	19	9031	21027
Do	147	22009	22009
Do	159	22013	22014
Do	203	9012	21011
Do	208	9033	21029

Index to Table F—Continued.

Title.	Order.	Number of route.	New number of route.
Pittsburgh, Cincinnati and Saint Louis	225	22016	22017
Do	236	9034	21030
Pittsburgh, Fort Wayne and Chicago	38	9002	.....
Do	44	9002	.....
Do	51	9002	.....
Do	66	2429	.....
Do	105	2429	.....
Do	228	9039	.....
Do	292	9039	21035
Port Royal	235	14010	14010
Raleigh and Augusta Air Line	289	13010	13010
Raleigh and Gaston	195	13001	13001
Reading and Columbia	280	2431	8031
Rhinebeck and Connecticut	247	1812	.....
Richmond and Danville	87	13004	13004
Do	161	13004	13004
Richmond and Petersburg	36	4409	11008
Rome, Watertown and Ogdensburg	210	1287	.....
Saint Louis and Southeastern	125	23032	.....
Do	149	19008	19008
Do	165	20010	20010
Do	308	23032	.....
Saint Louis, Rock Island and Chicago	151	23005	.....
San Francisco and North Pacific	139	46011	.....
Do	140	46011	.....
Savannah and Charleston	89	14004	14004
Savannah and Memphis	320	17016	17016
Savannah, Griffin and North Alabama	299	6146	15022
Seaboard and Roanoke	197	4415	11015
Selma and Gulf	316	17017	17017
Do	324	6617	17017
Selma, Rome and Dalton	143	6610	17010
Do	217	17010	17010
Shelby	293	20013	20013
Somerset	239	231	.....
South and North Alabama	216	17004	17004
South Carolina	156	14003	14003
Do	177	14003	14003
Do	178	14003	14003
Do	317	14003	14003
Southern, of Long Island	244	1295	.....
Southern Pacific	191	46017	.....
Southwestern	164	15011	15[illegible]
Do	173	15016	15[illegible]
Do	174	15016	15[illegible]
Do	273	6088	15[illegible]
Do	336	15017	15[illegible]
Stevens, W. H. and C. B., proprietors Eastern Ohio Railroad	269	9052	21[illegible]
Sullivan and Erie Coal and Railroad Company	301	2461	8[illegible]
Terre Haute and Indianapolis	22	22002	22[illegible]
Do	24	23031	.....
Texas, Mississippi River and Northwestern	341	7525a	29
Do	344	7645a	29
Toledo, Canada Southern and Detroit	102	24035	...
Do	115	24035	...
Union Pacific	15	34001	...
Utah Northern	150	41003	...
Utah Southern	180	41002	...
Do	230	41002	...
Utica and Black River	144	1288	...
Do	205	1288	...
Do	262	1288	...
Vaca Valley	266	46015	...
Vicksburgh and Brunswick	335	17021	17
Vicksburgh and Meridian	172	18003	18
Do	285	18003	18
Virginia and Truckee	131	16419	45
West End Narrow Gauge	339	28031	...
Western	274	5216	13
Western Maryland	166	3507	10
Western North Carolina	206	5006	13
Do	229	13006	13
Western, of Alabama	63	17001	17
Do	288	17002	17
West Jersey	136	2111	7
Do	220	2112	7
Do	291	2113	7
West Wisconsin	121	25014	...
White Water Valley	181	9035	21
Wilmington and Weldon	60	13002	13
Wilmington, Columbia and Augusta	67	14002	14
Do	130	14002	14
Woodstock	248	532	...
Worcester	246	3517	...

G.—*Statement of the number, description, and prices of mail-bags, mail-bag-catchers, mail locks and keys purchased, and of the expense incurred on account thereof during the fiscal year ended June 30, 1876, viz:*

Number.	Description.	Size.	Price.	Cost.	Aggregate.
200	Leather mail-pouches	No. 1	$6 56	$1,312 00	
400	.....do	No. 2	5 16	2,064 00	
600	.....do	No. 3	4 40	2,640 00	
600	.....do	No. 4	3 48	2,088 00	
500	.....do	No. 5	2 56	1,280 00	
2	.....do	No. 1	6 50	13 00	
3,202	.....do	No. 2	5 70	18,151 40	
4,602	.....do	No. 3	4 75	21,859 50	
3,502	.....do	No. 4	3 80	14,167 60	
2,602	.....do	No. 5	2 70	7,025 40	
	Royalty of patent 14,110 leather pouches	.....	10	1,411 00	
16,410					$72,011 90
400	Leather horse-mail-bags	No. 1	6 60	2,640 00	
500	.....do	No. 2	5 60	2,800 00	
200	.....do	No. 3	5 10	1,020 00	
1,100					6,460 00
202	Canvas (through registered) mail-pouches	No. 1	8 00	1,616 00	
1,802	.....do	No. 3	5 45	9,820 90	
					11,436 90
3,300	Canvas mail-catcher pouches	.....	4 25	14,025 00	
5,304					14,025 00
45,000	Jute canvas mail-sacks	No. 1	78	35,100 00	
5,456	.....do	No. 1	50	2,728 00	
11,000	.....do	No. 2	52	5,720 00	
3,403	.....do	No. 2	40	1,361 20	
3,500	.....do	No. 3	15	525 00	
626	.....do	No. 3	14	87 64	
68,985					45,521 84
5,000	Cotton canvas mail-sacks	No. 1	1 32	6,600 00	
1,500	.....do	No. 2	1 02	1,530 00	
2,500	.....do	No. 3	21	525 00	
*495	.....do	No. 3	62	306 90	
†2,500	.....do	No. 3	38	950 00	
11,995					9,911 90
	Repairs of mail-bags of every description	.....	.....	30,161 92	
	Advertised samples and miscellaneous expenses incident to mail-bags.	.....	.....	2,065 30	
					32,227 22
57,585	Printed wooden tags	.....	11-16 c.	602 15	
102,445	.....do	.....	11-16	979 30	
2,200	.....do	.....	2½	55 00	
600	.....do	.....	1 3-16	7 12	
18,100	.....do	.....	½	90 50	
250,930					1,734 07
35,000	Mail-bag label-cases	.....	12	4,200 00	
					4,200 00
650	Mail-bag-catchers	.....	15 00	9,750 00	
300	Sockets for mail-bag-catchers	.....	40	120 00	
20	Elongated sockets for mail-bag-catchers	.....	70	14 00	
200	Handles for mail-bag-catchers	.....	40	80 00	
18	Springs for mail-bag-catchers	.....	60	10 80	
	Personal service for mail-bag-catchers	.....	.....	1,174 96	
	Repairs of mail-bag-catchers	.....	.....	168 90	
					11,318 66
	Total expense of mail-bags and mail-catchers	.....	.....	.....	208,847 49
	MAIL LOCKS AND KEYS.				
9,625	Brass mail-locks for street letter-boxes	.....	1 25	12,031 25	
250	Steel keys for street letter-boxes	.....	15	37 50	
20	Brass safety key-chains	.....	86½	17 30	
500	Brass mail-locks for registered through mails	.....	1 75	875 00	
					12,961 05
	Repairs of 12,533 mail-locks	.....	.....	3,759 90	
					3,759 90
	Total expense of mail locks and keys	.....	.....	.....	16,720 95

* Red striped. † Black striped.

THOS. J. BRADY,
Second Assistant Postmaster-General.

H.—*Railway post-office lines in the United States June 30, 1876, showing the increase in the service since June 30, 1875.*

Terminal points.	Miles of route.	Miles of service.	Service each way.	Number of clerks.			Increase of miles of route from June 30, 1875, to June 30, 1876.	Increase of miles of service from June 30, 1875, to June 30, 1876.	Increase in number of clerks from June 30, 1875, to June 30, 1876.			Increase in lines of railway post-offices from June 30, 1875, to June 30, 1876.
				$1,400.	$1,200.	$1,000			$1,400.	$1,200	$1,000.	
Albany to Buffalo, N. Y	298	1,192	Twice daily	12	10	20				2	12	
Atlanta to Augusta, Ga	171	342	Daily		4							
Baltimore, Md., to Canandaigua, N. Y	325	650	... do	3	2	5			(a)	(a)	2	
Baltimore, Md., to Grafton, W. Va	280	1,120	Twice daily	10	8	3			2	4	(d)	
Bangor to Vanceborough, Me	118	236	Daily		4					4	(d)	
Bloomington, Ill., to Mexico, Mo	200	400	....do	2	3	1				(a)	1	
Boston, Mass., to Portland, Me	116	232	....do	4	3	3				(a)	2	
Boston, Mass., to Saint Albans, Vt	290	580	....do	4	8							
Boston, Mass., to Albany, N. Y	200	800	Twice daily	12	4	12			2	(d)	4	
Boston to Wellfleet, Mass	122	244	Daily		6							
Boston to Fitchburgh, Mass	50	100	....do			1						
Boston, Mass., to Bangor, Me	249	996	Twice daily	11	13							
Bristol to Chattanooga, Tenn	242	484	Daily	4	2	2				(f)	2	
Buffalo, N. Y., to Toledo, Ohio	295	1,180	Twice daily	14	20	27			2	2	5	
Burlington to Council Bluffs, Iowa	291	582	Daily	4	4							
Cairo to Centralia, Ill	112	224	... do	3	5	1			1		1	
Chattanooga, Tenn , to Atlanta, Ga	140	280	....do	4	4				1	1		
Chicago, Ill., to Fort Howard, Wis	242	484	....do	4	11	1				1	1	
Chicago, Ill., to Toledo, Ohio	243	972	Twice daily	14	19	20			5	3	9	
Chicago to Quincy, Ill	263	526	Daily	6	13	2				2	2	
Chicago to Freeport, Ill	121	242	....do	3	4							
Chicago, Ill., to Cincinnati, Ohio	310	620	....do	5	8	‡2			1	1	‡2	
Chicago, Ill., to Iowa City, Iowa	237	474	....do	5	8				(a)	1		
Chicago, Ill., to Cedar Rapids, Iowa	219	438	....do	5	6							
Chicago to Centralia, Ill	258	516	....do	6	9	3			1	(a)	3	
Chicago, Ill., to Saint Louis, Mo	280	560	....do	7	8				1	(a)		
Cleveland to Cincinnati, Ohio	244	488	....do	5	6	1				(a)		
Cleveland, Ohio, to Indianapolis, Ind	282½	565	....do	4	6				1	1		
Cincinnati, Ohio, to Saint Louis, Mo	340	680	....do	3	14				(a)	4		
Clinton to Council Bluffs, Iowa	350	700	....do	5	4							
Davenport to Council Bluffs, Iowa	307	614	....do	4	7					1		
Detroit, Mich., to Chicago, Ill	284	568	...do	4	5	1			1	(a)	1	
Dubuque to Fort Dodge, Iowa	214	428	....do	4	2				1	(a)		
Dubuque, Iowa, to Centralia, Ill	345	690	....do	6	5							
Grafton, W. Va., to Cincinnati, Ohio	309	1,236	Twice daily	5	8	1			1			
Grafton, W. Va., to Chicago, Ill	559	1,118	Daily	9	7	3			4	(c)	3	

Indianapolis, Ind., to Galesburgh, Ill	204	528	...do		7							
Kansas City, Mo., to Council Bluffs, Iowa	200	400	...do	4	3					(a)		
La Fayette, Ind., to Quincy, Ill	273	546	...do	5	15	1					1	
Louisville, Ky., to Nashville, Tenn	185	370	...do	7	9				2	4		
Lynchburgh, Va., to Bristol, Tenn	203	406	...do	4	4					(a)		
Louisville, Ky., to Milan, Tenn	284	568	...do	3	4		284	568	3	4		1
Milwaukee, Wis., to Saint Paul, Minn	324	648	...do	8	12					3		
New Orleans, La., to Cairo, Ill	548	1,096	...do	8	13				1	1		
New York, N. Y., to Boston, Mass	234	936	Twice daily	11	18	11				(b)	2	
New York, N. Y., to Washington, D. C	232	928	...do	14	8	§16			2	(a)	6	
New York to Buffalo, N. Y	422	1,688	...do	13	16	20			(b)	2	2	
New York to Albany, N. Y	144	576	...do	6	4	6			1	(a)	1	
Omaha, Nebr., to Ogden, Utah	1,032	2,064	Daily	15	20	1			1	(a)	1	
Philadelphia, to Pittsburgh, Pa	358	716	...do	7	5	23			2		18	
*Peoria, Ill., to Burlington, Iowa	43	86	...do	1	1							
Pittsburgh, Pa., to Saint Louis, Mo	620	1,240	...do	6	8	15	620	1,240	6	8	15	1
Pittsburgh, Pa., to Cincinnati, Ohio	313	626	...do		6	5	313	626		6	5	1
Quincy, Ill., to Kansas City, Mo	261	522	Daily	4	5					(a)		
Quincy, Ill., to Denison, Tex	593	1,186	...do	10	4				1	(e)		
Rochester to Niagara Falls, N. Y	77	154	...do		3							
San Francisco, Cal., to Ogden, Utah	881	1,762	...do	12	15	2			1	(a)	2	
Saint Louis, Mo., to Atchison, Kans	330	660	...do	7	7				1			
Toledo, Ohio, to La Fayette, Ind	203	406	...do	4	9	1				(c)	1	
Washington, D. C., to Weldon, N. C	216	864	Twice daily	13	9	5			1		3	
Washington, D. C., to Lynchburgh, Va	178	356	Daily	4	3	1				(a)		
†Hornellsville to Dunkirk, N. Y	128	256	...do									

Recapitulation and comparative statement of the service of June 30, 1875, and June 30, 1876, showing the increase.

	June 30, 1875.	June 30, 1876.	Increase.
Number of lines of railway post-offices	62	63	1
Aggregate number of miles of the above	16,932	17,713	781
Number of miles of actual service performed daily	40,109	41,671	1,562
Number of miles of actual service performed annually	14,639,785	15,209,915	570,130
Number of head clerks at $1,400 per annum	326	361	35
Number of clerks at $1,200 per annum	457	463	6
Number of assistant clerks at $1,000 per annum	117	216	99
‡An assistant clerk at $500 per annum	....	1	1
§An assistant clerk at $840 per annum	1	1	.....
Making total number of clerks	901	1,042	141
With an annual compensation amounting to	$1,122,640	$1,278,340	$155,700

a Reduction of one. *b* Reduction of two. *c* Reduction of three. *d* Reduction of four. *e* Reduction of five. *f* Reduction of 14.

* Distance from Peoria to Galesburgh, included in Indianapolis, Ind., to Galesburgh, Ill. † Number of clerks included in New York to Buffalo, N. Y.

NOTE.—Since last report the following railway post-office lines have been discontinued, viz: Cincinnati, Ohio, to Louisville, Ky., having a force of six clerks; Memphis to Chattanooga, Tenn., having a force of six clerks and six head clerks.

THOS. J. BRADY,
Second Assistant Postmaster-General.

POST-OFFICE DEPARTMENT,
OFFICE GENERAL SUPERINTENDENT RAILWAY MAIL SERVICE,
Washington, D. C., October 27, 1876.

SIR: During the year ending June 30, 1876, there were employed in the distribution, delivery, and transfer of the mails upon and between railroad and steamboat routes 1,042 railway post-office clerks, at an annual compensation of $1,278,340, an increase of 13.87 per cent. over the preceding year, and an average salary of $1,226 per annum; 1,017 route agents, at an annual compensation of $975,280, an increase of 3.33 per cent. over the preceding year, and an average salary of $958 per annum; 219 mail route messengers, at an annual compensation of $145,610, a decrease of 1.22 per cent. under the preceding year, and an average salary of $665 per annum; and 137 local agents, at an annual compensation of $104,910, an increase of 8.62 per cent. over the preceding year, and an average salary of $765 per annum. The percentage of increase in the expenses of the different classes of service for the year ending June 30, 1875, over that of the year ending June 30, 1874, were as follows:

	Per cent.
Railway post-office clerks	6.09
Route-agents	5.25
Mail-route messengers	8.00
Local agents	1.97

The cause of the much greater increase of compensation to railway post-office clerks for the year ending June 30, 1876, over that of the year ending June 30, 1875, was the extension of the service over lines of railroad that had heretofore declined to furnish proper facilities for the service, and the establishing of the fast railway post-office service between New York and Chicago, and New York, Saint Louis, and Cincinnati. The increase of expenses for clerical force necessitated by this extension was in a measure offset by the reduction in force on or entire discontinuance of other lines.

The table accompanying, which gives in detail the number of clerks, &c., upon the different lines of railway post-offices, will not show all the decrease on different lines, as transfers were made to a great extent by detail as actual experience made them possible.

The placing of railway post-office service upon new lines, taking the place of and performing the work of route-agents and mail-messenger service, materially lessened the increase of expense for route-agent service, and actually decreased the expense of mail messenger service, while the establishing of new lines of service, rendering an increase in the number of local agents necessary at the principal junctions, caused the increase of 8.62 per cent. for the year ending June 30, 1876, as against 1.97 per cent. for the year ending June 30, 1875.

Appropriations for 1877 *and estimates for* 1878.

RAILWAY POST-OFFICE CLERKS.

The appropriation for the salaries of railway post-office clerks for the year ending June 30, 1877, is $1,225,000, as against an expense for the year ending June 30, 1876, of $1,278,340. This material decrease made it necessary to reduce both salaries and force. Head railway post-office clerk's salaries were reduced from $1,400 to $1,300 per annum. Railway post-office clerks were reduced from $1,200 to $1,150 per annum. Assistant clerks were left at the old rate, $1,000 per annum, and at the

same time considerable reductions were made in force. This latter was possible on account of the withdrawal of our best postal-car facilities from the New York Central and Hudson River Railroad, Lake Shore and Michigan Southern Railroad, Pennsylvania Railroad and its connections.

In making estimates for the year ending June 30, 1878, the strong probabilities of the restoration of this service should be considered.

It is also due to the class of officers who perform this work of distribution of mail upon the railroads that the nature of their duties, the expense involved by absence from home, the risk and dangers continually attending them, should be considered in adjusting the salaries.

A railway post-office clerk travels on the cars, on an average, a distance of 131 miles daily, which at least consumes an average of 5 hours, is called upon to be on duty from 2 to 5 hours before the starting-time of his train, and is oftentimes on duty an hour or more after the arrival of his train at destination, making his daily average time on duty never less than 7 hours, and averaging 8 or 9. The work he is called upon to perform is different in every respect from any other labor on railroads, requiring him, as it does, to be constantly on his feet while the train is in motion. "The time during which almost every other class of railroad-employé is at rest." So that, in addition to his work as distributing-clerk, which is of itself sufficiently hard and tiresome when followed closely the day through, the exertion to maintain his perpendicular while the train is in motion intensifies the effect of continual jar upon the system; and experience shows that there are but few clerks who have been continually employed in this service for five years or over that do not feel very seriously the effect, and in very many cases have been forced to abandon their occupation on account of breaking down.

The railway post-office clerk when on duty is absent from home traveling and on expense, which is additional in every respect. This expense in England is commuted to the "traveling sorters," as his duty calls him from home at least half of the time, his salary is reduced from $150 to $200 annually. In addition, the head railway post-office clerk furnishes, at his own expense, all the stationery, &c., necessary to perform his work, which is a considerable item. It will be thus seen that the average pay of $1,226 per annum nets the clerk little over $1,000 per annum.

For these reasons, the estimates for the year ending June 30, 1878, should be made upon the basis of the old salary, $1,400 for head clerks, $1,200 for clerks, and $1,000 for assistant clerks, and allowing for a small increase to allow the extensions of the service, in case the railroads grant the necessary facilities. An increase of 6 per cent. over the expense of the year ending June 30, 1876, will be adequate. The estimate for the salaries of railway post-office clerks for the year ending June 30, 1878, will therefore be $1,355,040.

ROUTE-AGENTS.

The appropriation for the salaries of route-agents for the year ending June 30, 1877, is $972,500, as against an expense of $975,280 for the year ending June 30, 1876. In order that the expense for the fiscal year ending June 30, 1877, might be brought within the appropriation, the pay for route-agents was reduced according to the following scale:

A route-agent making a daily average run of 90 miles receives $900 per annum, with $20 per annum additional compensation to $900 per annum for each additional 10 miles per day to the daily average of 90

miles per day, up to a daily average of 140 miles per day, for which he receives $1,000 per annum, without increase of compensation for increase of daily average miles run.

Prior to June 30, 1876, the compensation to route-agents had been increased $30 per annum for each additional 10 miles to their daily average run over 90 miles per day to a sum not exceeding $1,080 per annum.

As the same statement, to a modified extent, regarding their expenses, risk, and work, which was made of railway post-office clerks, and at the old rates, their average pay only being $958 per annum, ranging from $900 to $1,200 per annum, the estimates for the year ending June 30, 1878, should be made upon the old basis. As the railway post-office service will displace this service to a great extent, an increase of 2 per cent. over the estimate for the fiscal year ending June 30, 1877, will be sufficient.

The estimates for the salaries of route-agents for the fiscal year ending June 30, 1878, will therefore be $1,071,000.

MAIL-ROUTE MESSENGERS.

The appropriation for the salaries of this class of employés for the fiscal year ending June 30, 1877, is $153,500. As these employés perform the work on short lines at a comparatively low salary, where otherwise route-agents, at a salary of at least $900 per annum, would be employed, an increase on the appropriation of the present year is necessary. An increase of 5 per cent. on the appropriation for the fiscal year ending June 30, 1877, will be ample.

In connection with these estimates the revival of railroad building should be considered, as it has a very important influence upon the expense of this class of service.

The estimate for the salaries of *mail-route messengers* for the fiscal year ending June 30, 1878, is therefore $161,175.

LOCAL AGENTS.

The appropriations for the salaries of local agents for the fiscal year ending June 30, 1877, is $109,000, as against an expense of $104,910 for the year ending June 30, 1876.

The great increase in the bulk of mail-matter, the improvement each year in railroad connections, and the importance of the mail-transfers made under the charge of this class of offices call for an increase in this class of employés. An increase of 5 per cent. over the appropriation for the year ending June 30, 1877, will be ample.

The estimate for the salaries of the local agents for the year ending June 30, 1878, will therefore be $114,450.

During the past year negotiations for the establishing of a fast-mail service were brought to a successful close, and on September 16, 1875, an exclusive postal-car train was started upon the New York Central and Hudson River and Lake Shore and Michigan Southern Railroads between New York and Chicago, via Albany, Buffalo, Cleveland, and Toledo. Postal-car lines were also started between New York, Saint Louis, and Cincinnati, over the Pennsylvania Railway and its connections, via Philadelphia, Pittsburgh, Columbus, and Indianapolis. These were run at a high rate of speed, and made connections at all important junctions with the regular trains to and from all parts of the country advancing the mails between the different sections from twelve to twenty-four and forty-eight hours.

The inauguration of these trains was as important a step on the improvement of the interior mail system as the inauguration of the railway post-office service itself. It was established as an experiment, but so fully did it accomplish all that was expected, and so much more, that it is greatly to be deplored that it could not have been continued. Though withdrawn July 22, 1876, it was in operation sufficiently long to thoroughly establish itself in the confidence of the business public.

Since the close of the last fiscal year, the action of the trunk lines of railroads over which the fast-mail service was in operation, not only by the withdrawal of the fast-mail service, but the most important lines of railway post-offices on other trains, and the denial of the use of some of the best trains, even for the forwarding of ordinary closed mails, has greatly embarrassed this service, and it is only by the utmost exertion on the part of the officers in charge that serious confusion does not result.

It is greatly to be hoped that Congress will, during the approaching session, take such action in regard to compensation for mail transportation on railroad routes as will obtain the best possible facilities, not only for railway post-office service, but for the forwarding of mails in bulk on all trains that may be run on any road. A continuance of the present delays and irregularities resulting from deficient accommodations on railroad lines cannot but affect disastrously all business interests.

Up to the time of the discontinuance of the fast-mail service and its accompanying lines of post-office cars on other trains, the great bulk of mails forwarded by railroad routes was distributed and arranged for final delivery while in transit.

The following statement of the number of packages of letters and sacks of papers that were distributed on the fast-mail line for six months ending April 30th, 1876, will give some idea of the immense work performed on the cars.

TABLE A.—*Report of mails distributed in New York and Chicago, ("the Fast Mail,") Buffalo and Toledo, and Toledo and Chicago railway post-offices, for six months ending April 30, 1876.*

MONTHLY TOTALS.

Date.	Papers.		Letters.		No. regs. in transit.
	Number of sacks.	Number of pieces.	Number of packages.	Number of letters.	
November, 1875	29, 024	5, 804, 800	146, 160	8, 769, 600	.....
December, 1875	31, 726	6, 345, 200	156, 976	9, 418, 560	.....
January, 1876	31, 384	6, 276, 800	163, 689	9, 821, 340	.....
February, 1876	31, 156	6, 231, 200	158, 451	9, 507, 060	37, 649
March, 1876	34, 670	6, 935, 800	175, 334	10, 570, 040	45, 014
April, 1876	33, 708	6, 741, 600	164, 882	9, 892, 920	44, 258
Total	191, 668	38, 335, 400	965, 492	57, 979, 520	126, 921

TABLE A.—*Report of mails distributed, &c.*—Continued.

MONTHLY TOTALS ARRANGED BY STATES.

Month.	Number of paper sacks.									
	New England.	New York.	New Jersey.	Pennsylvania.	Ohio.	Michigan.	Indiana.	Illinois.	Iowa.	Wisconsin.
November	1,679	2,649	95	651	3,134	2,490	1,660	2,573	2,070	1
December	1,816	3,296	113	623	3,331	2,886	1,819	2,890	2,434	1
January	1,650	2,849	131	732	3,201	2,892	1,798	2,721	2,249	1
February	1,707	2,560	130	679	2,989	2,754	1,631	2,613	2,225	1
March	1,494	3,450	64	762	3,566	3,299	2,026	2,934	2,604	1
April	1,643	4,192	51	758	3,137	2,808	1,807	2,929	2,365	1
Total	9,989	18,996	584	4,205	19,298	17,129	10,741	16,660	13,947	8

Month.	Missouri.	Kansas.	Minnesota.	Nebraska.	Dakota.	Colorado.	Territories.	Mixed.	Local.	Estimated
November	849	619	23	451	138	.....	63	2,760	5,697	
December	963	689	28	533	134	.....	682	2,647	4,787	
January	949	767	21	519	200	.....	993	3,239	4,463	
February	1,053	840	.....	520	204	.....	1,358	3,054	4,650	
March	1,285	910	.....	651	68	179	1,129	3,845	4,224	
April	1,204	842	20	667	120	203	1,105	3,535	3,178	1,
Total	6,303	4,667	92	3,341	864	382	5,330	19,080	26,999	4,

Month.	Number of letter-packages.									
	New England.	New York.	New Jersey.	Pennsylvania.	Ohio.	Michigan.	Indiana.	Illinois.	Iowa.	Wisconsin.
November	14,258	23,337	1,463	8,241	16,870	13,702	8,903	10,519	7,253	5,
December	16,328	24,494	2,195	8,360	20,666	14,128	10,081	10,223	7,666	6,
January	18,329	23,774	2,479	8,383	18,984	14,638	9,213	10,169	8,078	7,
February	18,148	21,837	2,259	7,117	20,063	13,750	9,719	9,769	8,306	6,
March	20,584	25,896	2,373	9,367	23,025	15,283	10,316	10,886	8,787	6,
April	20,708	25,725	2,422	8,184	20,570	14,440	9,973	9,602	8,113	6,
Total	108,355	145,063	13,191	49,652	120,178	85,941	58,205	61,177	48,203	37,

Month.	Missouri.	Kansas.	Minnesota.	Nebraska.	Dakota.	Colorado.	Territories.	Mixed.	Local.	Estimated.
November	1,762	1,205	1,687	1,689	423	.....	1,041	15,941	11,426	
December	1,963	1,373	2,150	1,843	456	.....	1,148	15,665	10,714	1
January	2,261	1,716	2,976	1,722	551	.....	1,792	16,821	13,298	1
February	2,033	1,731	3,160	2,100	623	.....	1,273	16,164	11,815	2
March	2,110	2,008	3,555	2,214	352	707	681	19,089	11,059	
April	2,223	1,941	3,415	2,316	413	1,330	245	17,441	8,299	1
Total	12,352	9,974	16,943	11,884	2,818	2,037	6,180	101,121	66,611	7

By this it will be seen that 965,492 packages, containing 57,979,520 letters, and 191,668 sacks, containing 38,335,400 packages of papers and other miscellaneous matter, 96,314,920 separate pieces of mail matter in all, giving an average of 529,200 pieces handled daily. This was in addition to the through mail or mails made up for direct exchange in pouches, between the different large cities, and the mail in transit for final distribution upon lines beyond. These figures are obtained from a record kept of each day's work.

Upon each package of mail made up on any postal or route agent's line for final delivery on any other postal or route agent's route to offices local to such route, or for final distribution in any post-office, is placed a slip bearing the post-mark of the route, date, and name of the clerk or agent making the distribution. The clerk, agent, or offiec receiving this package notes all errors, if any, upon this slip, and certifies to the same. If no errors are made it is marked "O. K.," and returned to the division superintendent. These errors are entered against each clerk or agent, and a record thus kept of the work performed upon the cars. These slips are not put upon packages of letters made up for offices direct. During the same six months ending April 30, 1876, the same six months given in the table above, the number of slips returned, which covered packages of letters made up on the fast-mail line, with he number of letters missent, is contained in the following table:

TABLE B.—*Fast-mail facing-slip report for six months ending April* 30, 1876.

Date.	Number of slips covering packages returned.	Number of slips covering packages correct.	Number of slips covering packages incorrect.	Number of letters sent wrong.	Number of packages sent wrong.
November, 1875	57,400	54,402	2,998	8,277	6
December, 1875	51,276	49,009	2,267	5,050	53
January, 1876	58,420	56,179	2,241	3,818	67
February, 1876	75,012	72,447	2,565	4,156	58
March, 1876	83,203	80,474	2,729	5,693	74
April, 1876	78,922	76,559	2,363	4,455	106
Total	404,233	389,070	15,163	31,449	422

Total number of slips covering packages returned	404,233
Total number of letters contained in packages covered by slips returned	24,253,980
Total number of packages which contained any errors	15,163
Total number of letters sent wrong	31,449
Number of letters correctly distributed to each letter sent wrong	800

This table shows that but one letter out of each 800 distributed was missent, which, considering the rapidity with which the clerks performed their work, is certainly remarkable. On lines where the clerks can take more time and work more deliberately the records stand one error to each 1,500 to 2,000 letters distributed.

Some conception of the immense bulk of mail-matter in transit can be formed from the following statement of mails originating at New York destined for dispatch on the three trunk lines, viz, New York Central, Pennsylvania, and Erie Railway lines to the West only, during the period commencing December 1, 1875, and ending February 8, 1876.

This does not include any mail arriving on other roads transferre through the city. The figures represent pounds:

Date.	Total for each month.	Daily averag for each.
December 1 to 31	2,030,384	65,
January 1 to 31	1,930,937	62
February 1 to 8	487,779	60
Total	4,449,100	63

The following is a statement of the total weight of mails for Decemb 1875, departing from and arriving at New York over the same road (New York Central and Hudson River, Pennsylvania, and Erie,) inclu ing both the mails originating at New York and those arriving on othe roads and transferred through the city to those roads.

This is for the month of December only.

Weight of mail forwarded from New York	2,803,17
Daily average	90,48
Weight of mails arriving at New York	1,234,83
Daily average	37,40
Total weight of mails arriving at and departing from New York	4,038,00
Daily average	127,89

A great difficulty to contend with in the railway mail-service on thos lines where there is night service, is the lighting of the cars. On almos every line either the lamps are inadequate to the proper lighting of th cars, or the oil is of an inferior quality. Several of the larger lines hav gone to a considerable expense in providing lamps, &c., that would in sure against trouble in this, but none have been entirely successful. A small appropriation of $500 for the purpose of testing fully, differen lamps and oil for this purpose, would result in immense benefit to th service, if made with a view to furnishing the lighting fixtures and ma terial for all postal cars. The expense would probably not excee $2,000 per annum for this purpose, and would be more than balanced b the saving in time of clerks who are compelled to perform their labo by poor and uncertain light. Another and very important object woul be the lessening of risk to postal clerks in case of accident, as durin the past two years two postal clerks have been burned to death i wrecks where the oil used in the lamps ignited and spread the fire s that rescue was impossible. In one instance the clerk would have e caped with hardly a bruise, but being so wedged in that he could n extricate himself, the heat of the burning wreck rendering aid impossibl

The project of owning the cars used for railway post-offices has bee frequently discussed by officers of this service, and is worthy of caref consideration, as it would be beneficial in many ways. It would co the Government nothing, as the same arrangement could be made wi the different companies that is now made by through freight lines, pa ace car, or other companies controlling their own cars, by which reduction in the compensation to railroads for mail transportation coul be made sufficient to cover depreciations and replacement.

Herewith is submitted a table showing in detail the changes made i railway post-office service for the last fiscal year.

Finally, it is but due to the employés of the Department in this branc of the service that a recognition be made of their fidelity to duty an

the trust reposed in them. The faithful manner in which they perform their service, and oftentimes under very trying circumstances, is unequaled in any other service, and instances of heroic devotion to duty are by no means rare. They seem to appreciate the fact that upon the careful performance of their duties are dependent interests of a magnitude that cannot be estimated, and that a single error on their part, resulting in the delay or missending of a single letter, no matter how unimportant it may look, may result disastrously to some individual or corporation.

Very respectfully,

THEO. N. VAIL,
Gen'l Supt.

Hon. THOS. J. BRADY,
Second Assistant Postmaster-General.

Statement of the weights of mails dispatched to Postal Union countries during the year.

	Letters. Grams.	Newspapers and printed matter. Grams.
To Great Britain and Ireland	44,258,757	203,014,405
Germany	27,085,027	83,922,270
France, (6 months from January 1, 1876)	6,438,109	24,617,02[illegible]
Italy	1,896;310	6,025,39[illegible]
Switzerland	1,752,586	7,426,46[illegible]
Sweden	2,437,144	3,519,00[illegible]
Norway	1,866,000	2,890,53[illegible]
Netherlands	1,263,326	3,245,53[illegible]
Denmark	1,210,744	2,254,31[illegible]
Belgium	823,714	2,541,37[illegible]
Spain, (6 months from January 1, 1876)	257,180	1,239,57[illegible]
	89,288,897	340,695,887
Estimating for 6 months' weight of mails to France and Spain	6,695,289	25,856,599
Total	95,984,186	366,552,486

ARRANGEMENT CONCERNING THE ENTRANCE INTO THE GENERAL POSTAL UNION OF BRITISH INDIA AND THE FRENCH COLONIES.

The postal administration of British India having communicated, in conformity with Article XVII of the treaty concerning the formation of a General Postal Union, concluded at Berne, October 9, 1874, its intention to enter the General Postal Union, and the French Government having made a similar declaration in the name of its colonies,

The undersigned delegates have established, subject to approval, the following provisions:

ARTICLE I.

British India and the French colonies accede to the stipulations of the treaty concerning the formation of a General Postal Union, concluded at Berne the 9th October, 1874, and also to the provisions of the regulations of detail and order established for the execution of said treaty.

ARTICLE II.

The correspondence originating in one of the countries mentioned in Article I, addressed to another country of the Union, and vice-versa, shall be subject to the Union postages adopted by each of the administrations, by virtue of paragraphs 1, 2, 3, 4, and 5 of Article III, and of paragraphs 1, 2 and 3 of Article IV of the treaty of Berne of October 9, 1874.

Each administration shall have the power to add to these postages, as maritime rate, an additional postage which shall not exceed the maximum fixed by Article III, second paragraph, and Article IV, second paragraph, of the Berne treaty, for the prepaid dispatches.

When, however, the conversion of the postages into the national money shall produce fractions, these fractions may be forced to a whole.

It is expressly understood that the additional maritime-postage shall be levied but once, even when several maritime services participate in the transportation.

ARTICLE III.

Under the head of maritime transportation of the correspondence entioned in Article II, preceding, the despatching administration shall ıy to the administration or to the administrations providing this transrtation, a bonification:

1st, of 25 francs per kilogramme, net weight, of letters and post-cards; ıd

2d, of 1 franc per kilogramme, net weight, of matter described in arti- ɜ 4 of the treaty concluded at Berne, October 9, 1874.

When the maritime transportation shall be performed by two or more lministrations, the bonification shall be divided among them upon the ıses of the distances traversed, without prejudice to the various arıngements which may intervene between the administrations conɜrned.

No bonifications, however, shall be due for the maritime transportaions not exceeding 300 nautical miles.

ARTICLE IV.

The correspondence, which, by virtue of the final paragraph of Article X of the treaty of Berne, of October 9, 1874, shall have extraordinary transportation expenses to support, may be subjected to an additional charge in proportion to such expenses.

ARTICLE V.

In regard to the stipulations of Article XXVII of the regulations annexed to the treaty of Berne, concerning the division of the expenses of the International Bureau of the General Postal Union, it is agreed that India shall belong to the 1st class, and the whole of the French colonies to the 3d class, as provided by that article.

ARTICLE VI.

The present arrangement shall take effect from July 1, 1876.

Done and signed at Berne, in 14 copies, January 27, 1876.

For the German Postal Administration	GÜNTHER.
For the Austrian Postal Administration	DEWÉZ.
For the Hungarian Postal Administration.....	HEIM.
For the Belgian Postal Administration.....	FASSIAUX. GIFE.
For the Egyptian Postal Administration	EUGÉNE BOREL.
For the Spanish Postal Administration	J. DE HOYOS. VTE-DE MANZANERA.
For the French Postal Administration	ANSAULT.
For the Ministry of Marine and Colonies of France, in the name of the French Colonies..	E. ROY.
For the Postal Administration of Great Britain.	ALAN MACLEAN.
For the Postal Administration of British India..	ALAN MACLEAN.
For the Italian Postal Administration.....	TANTESIO.
For the Netherland Postal Administration	HOFSTEDE.
For the Postal Administrations of Sweden and Norway.....	M. BJORNSTJERNA.

COUNTRIES BEYOND SEA TO WHICH THE ARRANGEMENT CONCLUDED AT BERNE 27 JANUARY, 1876, IS APPLICABLE.

I. BRITISH INDIA.

Hindostan, British Burmah, Aden.

II. FRENCH COLONIES.

America—Martinique, Guadaloupe, and dependencies, French Guiana, St. Pierre, and Miquelon.

Africa—Senegal and dependencies, Gaboon, Réunion, Mayotte and dependencies, Ste. Marie de Madagascar.

Asia—French establishments in India (Pondicherry, Chandernagor, Karikal, Mahé, and Yanaon) and in Cochin China.

Oceanica—New Caledonia and dependencies, Marquesas Islands, Tahiti, and the Archipelagoes subject to the protectorate of France.

DEPARTMENT OF STATE,
Washington, August 12, 1876.

SIR: I have the honor to inclose herewith a copy of a letter dated July 12, received from the President of the Swiss Confederation, through the minister of the United States at Berne, announcing the adhesion of the French colonies and the British Indies to the General Postal Union treaty.

I will thank you to notify me of anything you may desire to have done concerning this subject.

I have the honor to be, sir, your obedient servant,
HAMILTON FISH.

Hon. JAMES N. TYNER,
Postmaster-General.

[Inclosure.]

Letter of President of Swiss Confederation July 12, 1876.

BERNE, *July* 12, 1876.

British India and the French colonies having asked to be admitted into the general postal union, a conference between their administrations and the other administrations interested assembled at Berne in the month of January last, and adopted on the 27th of said month an arrangement which fixes the conditions of the adhesion of those two countries to the stipulations of the treaty of Berne of 9th October, 1874. This arrangement, communicated to all the members of the union by circular of 29th January, encountered no objection within the period of six weeks prescribed by Article XVII of the postal-union treaty, so that, by virtue of this same article, the adhesion of British India and the French colonies, being considered as accomplished, was to be attested by a diplomatic act between the government of the managing administration and the governments of the two administrations admitted into the union.

Consequently, the federal council, in the name of the members of the union, exchanged on the 8th of April with the government of the French Republic, and on the 1st of July with the government of the United Kingdom of Great Britain and Ireland and the government of British

ıdia, acts attesting the definitive adhesion of British India and the rench colonies to the stipulations of the treaty of Berne of 9th October, 874. The federal council has the honor to transmit with the present ote to his excellency the Minister of Foreign Affairs of the United tates the text of these acts, the duplicates of which, intended for the deral council, in its character of representative of the members of the nion, are deposited in the archives of the Swiss Confederation.

The federal council avails itself of this occasion, &c.

In the name of the Swiss federal council.

WELTI,

The Chancellor of the Confederation Schiess.

An arrangement concerning the entrance of the French colonies into he general postal union having been concluded at Berne on the 27th January, 1876, between the delegates of the French government and the lelegates of the administrations interested forming a part of the postal ınion, and no objection against this arrangement in consequence of the communication thereof made to all the members of the union by circular of 29th January, 1876, having been presented within the period of six weeks prescribed by Article XVII, paragraph 6, of the treaty of Berne of 9th October, 1874:

The undersigned, duly authorized for that purpose, do attest, by the present diplomatic act, the definitive adhesion of the French government, for its colonies, to the stipulations of the treaty concerning the creation of a general postal union concluded at Berne the 9th of October, 1874, as well as to the provisions of the detailed regulations for the execution of the said treaty.

Done at Berne the 8th of April, 1876.

For the Swiss federal council, in the name of the members of the union:

The president of the confederation,

[L. S.] WELTI.

For the government of the French Republic:

The ambassador of France to the Swiss Confederation,

[L. S.] B. D'HARCOURT.

An arrangement concerning the entrance of British India into the general Postal Union having been concluded at Berne on the 27th January, 1876, between the delegates of the British government and the delegates of the administrations interested forming part of the Postal Union, and no objection against this arrangement, in consequence of the communication thereof made to all the members of the union by circular of 29th January, 1876, having been presented within the period of six weeks prescribed by Article XVII, paragraph 6, of the treaty of Berne of 9th October, 1874:

The undersigned, duly authorized for that purpose, do attest by the present diplomatic act, the definitive adhesion of the British government for British India to the stipulations of the treaty concerning the creation of a general Postal Union concluded at Berne the 9th of October, 1874, as well as to the provisions of the detailed regulations for the execution of said treaty.

Done at Berne the 1st of July, 1876.

For the Swiss Federal Council, in the name of the members of the union:

The President of the confederation,

[L. S.] WELTI.

For the government of the United Kingdom of Great Britain and I land, and for the government of British India:

Her British Majesty's minister resident in the Swiss Confederation.

[L. S.] EDWIN CORBETT.

POSTAL CONVENTION BETWEEN THE UNITED STATES OF AMERICA AND THE COLONIAL GOVERNMENT OF QUEENSLAND.

The undersigned, being thereunto duly authorized by their respective Governments, have agreed upon the following articles, establishing and regulating the exchange of correspondence between the United States of America and the colony of Queensland:

ARTICLE I.

There shall be an exchange of correspondence between the United States of America and Queensland by means of the direct line of colonial mail-packets plying between San Francisco and New South Wales, as well as by such other means of direct mail-steamship transportation between the United States and New South Wales as shall hereafter be established with the approval of the respective post departments of the countries concerned, comprising letters, newspapers, printed matter of every kind, and patterns and samples of merchandise, originating in either country and addressed to and deliverable in the other country, as well as correspondence in closed mails originating in Queensland and destined for foreign countries by way of the United States.

ARTICLE II.

The post-office of San Francisco shall be the United States office of exchange, and Brisbane the office of exchange of the colony of Queensland for all mails transmitted under this arrangement.

ARTICLE III.

No accounts shall be kept between the post-departments of the two countries upon the international correspondence, written or printed, exchanged between them, but each country shall retain to its own use the postages which it collects.

The single rate of international letter-postage shall be twelve cents in the United States and sixpence in Queensland on each letter weighing half an ounce or less, and an additional rate of twelve cents (sixpence) for each single weight of half an ounce or fraction thereof, which shall in all cases be prepaid at least one single rate by means of postage-stamps at the office of dispatch in either country. Letters unpaid, or prepaid less than one full rate of postage, shall not be forwarded, but insufficiently-paid letters, on which a single rate or more has been prepaid, shall be forwarded, charged with the deficient postage, to be collected and retained by the post-department of the country of destination.

The United States post-office shall levy and collect to its own use on newspapers addressed to Queensland a postage charge of two cents, and on all other articles of printed matter, patterns and samples of merchandise, addressed to Queensland, a postage charge of four cents per each weight of four ounces or fraction of four ounces.

The post-office of Queensland shall levy and collect to its own use on

newspapers addressed to the United States a postage charge of two cents, and on other articles of printed matter, patterns and samples of merchandise, addressed to the United States, a postage charge of four cents per each weight of two ounces or fraction of two ounces.

Letters, newspapers, and other articles of printed matter, patterns and samples of merchandise, fully prepaid, which may be received in either country from the other, shall be delivered free of all charge whatsoever.

Newspapers and all other kinds of printed matter, and patterns and samples of merchandise, are to be subject to the laws and regulations of each country, respectively, in regard to their liability to be rated with letter postage when containing written matter, or for any other cause specified in said laws and regulations, as well as in regard to their liability to customs duty under revenue laws.

ARTICLE IV.

The United States office engages to grant the transit through the United States, as well as the conveyance by the United States mail-packets, of the correspondence in closed mails which the Queensland post-office may desire to transmit via the United States to British Columbia, the British North American provinces, the West Indies, Mexico, Central and South America, and at the following rates of United States transit-postage, viz:

For the United States territorial transit of closed mails from Queensland for Mexico, British Columbia, Canada, or other British North American provinces, when transmitted entirely by land-routes, six cents per ounce for letter-mails, and sixteen cents per pound for all kinds of printed matter.

For the United States territorial and sea transit of closed mails from Queensland for British Columbia or other British North American provinces, Mexico, Central and South America, or the West India Islands, when transmitted from the United States by sea, twenty-five cents per ounce for letter-mails, and twenty cents per pound for all kinds of printed matter.

The Queensland post office shall render an account to the United States post office, upon letter-bills to accompany each mail, of the weight of the letters, and also of the printed and other matter contained in such closed mails, forwarded to the United States for transmission to either of the above-named countries and colonies, and the accounts arising between the two offices on this class of correspondence shall be stated, adjusted, and settled quarterly, and the amounts of the United States transit-charges found due on such closed mails shall be promptly paid over by the Queensland post office to the United States post office in such manner as the Postmaster-General of the United States shall prescribe.

ARTICLE V.

Prepaid letters from foreign countries received in and forwarded from the United States to Queensland shall be delivered in said colony free of all charges whatsoever, and letters received in Queensland from the United States addressed to other colonies of Australia will be forwarded to destination subject to the same conditions as are applicable to correspondence originating in Queensland and addressed to those countries.

ARTICLE VI.

The two post-departments may, by mutual agreement, provide for the transmission of registered articles in the mails exchanged between the two countries.

The register-fee for each article shall be ten cents in the United States and fourpence in Queensland.

ARTICLE VII.

The two post-departments shall settle by agreement between them all measures of detail and arrangement required to carry this convention into execution, and may modify the same in like manner, from time to time, as the exigencies of the service may require.

ARTICLE VIII.

Every fully prepaid letter dispatched from one country to the other shall be plainly stamped with the words "paid all," in *red ink*, on the right-hand upper corner of the address, in addition to the date-stamp of the office at which it was posted, and on insufficiently-paid letters the amount of the deficient postage shall be inscribed in *black ink*.

ARTICLE IX.

Dead letters, which cannot be delivered from whatsoever cause, shall be mutually returned, without charge, monthly, or as frequently as the regulations of the respective offices will permit.

ARTICLE X.

This convention shall come into operation on the 1st day of January, 1876, and shall be terminable at any time on a notice, by either office, of six months.

Done in duplicate and signed in Brisbane, the eighth day of December, in the year of our Lord one thousand eight hundred and seventy-five, and in Washington on the second day of February, one thousand eight hundred and seventy-six.

[SEAL.] MARSHALL JEWELL,
Postmaster-General of the United States.
GEORGE THORN, JUNIOR,
Postmaster-General of Queensland.

Approved.
EWD. CAIRNS.

I hereby approve the aforegoing convention, and in testimony thereof I have caused the seal of the United States to be affixed.

[SEAL.] U. S. GRANT.

By the President:
HAMILTON FISH,
Secretary of State.

WASHINGTON, *February* 5, 1876.

DDITIONAL AGREEMENT BETWEEN THE UNITED STATES OF AMERICA AND THE EMPIRE OF JAPAN, MODIFYING THE PROVISIONS OF THE POSTAL CONVENTION OF THE 6TH AUGUST 1873, AND ALSO OF THE AGREEMENT OF APRIL 26TH 1875 BETWEEN THE TWO COUNTRIES.

The undersigned being thereunto duly authorized by their respective overnments have agreed to modify the provisions of the Postal Conention between the United States and Japan, concluded the 6th day f August, A. D. 1873, or the 6th day of the 8th month of the 6th ear of Meiji, and of the Agreement between the United States and apan, signed at Washington the 26th day of April A. D. 1875, as folows:

1st. It is agreed that the second paragraph of Article III of the said onvention be so modified that the single rate of international letter ostage shall be reduced to five cents in the United States and five sen i Japan, on each letter weighing fifteen grammes (one half ounce) or ss, and an additional rate of five cents or five sen for each additional eight of fifteen grammes, (one half ounce) or fraction thereof.

Also that the Agreement between the United States and Japan, signed t Washington the 26th day of April A. D. 1875, relative to the interational postage on newspapers and other printed matter, patterns and amples of merchandize exchanged between the two countries be so odified that the postage to be levied, collected, and retained by the ost Office of the country of origin shall be reduced to two cents in the nited States and two sen in Japan on each newspaper not exceeding our ounces in weight, and two cents or sen for each weight of two unces or fraction of two ounces on all other articles of printed matter, atterns and samples of merchandize.

2nd. It is further agreed, in view of the fact that the Japanese Government is about to establish a Postal Agency at Shanghai, China; that the same rates of postage and conditions of exchange shall be applied to correspondence of every kind originating in said Japanese Postal Agency, and despatched through the exchange office of Yokohama to the United States or to foreign countries via the United States, as are applied to the correspondence similarly addressed, originating in the Empire of Japan.

3rd It is further agreed that the respective Japanese post offices of Yokohama, Hiogo, and Nagasaki may exchange correspondence by means of American or Japanese mail packets with the Japanese Postal Agency at Shanghai.

And it is also agreed, that the single rate of letter postage to be levied and collected at the United States Postal Agency at Shanghai on letters addressed to Japan, shall be five instead of six cents as stipulated in Article V of the Postal Convention between the two countries—and in like manner, a reduced single letter rate of five sen shall be levied and collected in Japan on letters for Shanghai when despatched in the mails to the United States Postal Agency at that port.

4th It is also hereby agreed that the provisions of Article V of the Postal Convention of August 6th 1873, as herein modified, shall continue in force until the 31st of December, 1876, the date of expiration of the existing contract between the United States and the Pacific Mail Steamship Company, for the mail service between Yokohama and Shanghai, touching at the ports of Hiogo and Nagasaki; and that on and after January 1, 1877, its provisions shall apply only to such mails, if any, as shall after that date be exchanged between the Japanese post office at Yokohama, and the United States Postal Agency at Shanghai, by means

of mail packets under contract with the United States Post Off
partment performing regular trips between the port of Yokohama,
and the port of Shanghai, China.

This agreement shall be carried into operation on the 1st day of
A. D. 1876, or on the 1st day of the 4th month of the 9th year of

Done in duplicate original and signed at Washington this eigh
of February one thousand eight hundred and seventy six, or the 8
of the 2nd month of the 9th year of Meiji.

[L. S.] MARSHALL JEWELL
Postmaster General of the United St
YOSHIDA KIYONARI
His Imperial Japanese Majesty's Envoy Extraordinary a
Minister Plenipotentiary to the United States of Ame

I hereby approve the aforegoing Agreement, and in testimony t
I have caused the seal of the United States to be hereto affixed.

[L. S.] U. S. GRA

By the President
HAMILTON FISH,
Secretary of State.

WASHINGTON, *February 8th* 1876.

Translation.

I hereby approve the foregoing Agreement and in testimony t
I have caused the seal of the Empire of Japan to be affixed.

[L. S.] MUTSUHI

The 31st day of the 3rd month of the 9th year, Meiji.

By order of His Majesty
TERASHIMA MUNENORI.
Minister for Foreign Affairs.

POSTAL CONVENTION BETWEEN THE UNITED STATES OF AMI
BERMUDA.

The undersigned, being thereunto duly authorized by thei
governments, have agreed upon the following articles, estal
regulating the exchange of correspondence between the U
of America and Bermuda:

ARTICLE I.

There shall be an exchange of mails between the Un
America and Bermuda, by such means of transportatio
or shall hereafter be, established with the approval of
Post Departments of the two countries, comprising lett
script subject by the laws of either country to letter r
newspapers, books, printed matter of every kind, shee
gravings, lithographs, photographs, drawings, maps, an
ing in either country and addressed to and delivera
-ntry.

-hall make its own arrangements for, a

ARTICLE II.

New York shall be the office of exchange on the side of the United States, and Hamilton shall be the office of exchange on the side of Bermuda, for all mails transmitted between the two countries under this arrangement; and all mail matter transmitted in either direction between the respective offices of exchange shall be forwarded in closed bags or pouches, under seal, addressed to the corresponding exchange office..

The two Post Departments may at any time discontinue either of said offices of exchange or establish others.

ARTICLE III.

The standard weight for the single rate of postage and rule of progression shall be:

1. For letters or manuscripts subject by law to letter rate of postage, fifteen grammes, (one half ounce avoirdupois.)

2. For all other correspondence mentioned in the first article, that which each country shall adopt for the mails which it despatches to the other, adapted to the convenience and habits of its interior administration. But each country shall give notice to the other of the standard weight it adopts, and of any subsequent change thereof. The weight stated by the despatching exchange office shall always be accepted, except in cases of manifest error.

ARTICLE IV.

No accounts shall be kept between the Post Office Departments of the two countries, on the international correspondence, written or printed, exchanged between them; but each country shall levy, collect, and retain to its own use, the following postal charges, viz:

1. The rate of postage to be charged and collected in the United States on each prepaid letter or manuscript subject to letter postage, addressed to Bermuda, shall be five (5) cents United States currency, for each weight of fifteen grammes or fraction thereof; and the rate of postage to be charged and collected in Bermuda on each prepaid letter or manuscript subject to letter postage, addressed to the United States of America, shall be two pence, the same to be in each case in full of all charges whatever, to the place of destination in either country.

The charge on unpaid letters shall be double the rate levied in the country of destination on prepaid letters.

2. On all other articles of correspondence mentioned in the first article, the Post Departments of the United States and Bermuda may respectively levy, collect, and retain to their separate and exclusive use, such rates of postage adapted to their interior administration and to the cost of sea transportation, as they shall deem advisable; which rates shall, in like manner, be in full of all charges whatever, to the place of destination in either country. But each office shall give notice to the other of the rates it adopts for such correspondence, and of any subsequent change thereof. The maximum weight of such correspondence is fixed at 4 pounds.

Newspapers and other correspondence of the class referred to in the preceding paragraph, shall be sent in narrow bands, or covers open at the sides or ends, so that they may be easily examined; and packages of such correspondence shall be subject to the laws and regulations of each country in regard to their liability to pay customs duty, if contain-

ing dutiable goods; or to be rated with letter postage when containin written matter, or for any other cause specified in said laws and regul tions.

ARTICLE V.

Prepayment of postage of every description of article can be effect only by means of postage stamps or stamped envelopes valid in t country of origin.

The correspondence to be reciprocally exchanged, shall be impress on the upper part of the address with a stamp indicating the place origin and date of posting.

Unpaid or insufficiently paid letters, or manuscripts subject by law letter rate of postage, shall, in addition, be impressed with the stamp (tax to be paid), the application of which shall devolve upon the e change office of the country of origin.

Every international letter, or manuscript subject to letter postage which does not bear the stamp T, shall be considered as fully paid t destination, and treated accordingly, unless there be an obvious error

When a letter, or any manuscript subject by law to letter postage, un paid or insufficiently paid, shall be liable, by reason of its weight, t more than a single rate of postage, the despatching office shall indicate i the upper right-hand corner of the address, in ordinary figures, th number of rates to which it is liable.

When a letter shall be insufficiently prepaid by means of postag stamps, the despatching office shall indicate, in figures in black in placed by the side of the postage stamps, their total value expressed i the currency of the country of destination.

In case postage stamps may be used which are not of any value in th country of origin, no account shall be taken of them. This fact shall b indicated by the figure "0," placed by the side of the postage stamps.

The office of the country of destination shall charge the insufficient paid letters with the amount of the deficient postage calculated at th rate of an unpaid letter of the same weight.

In case of need, fractions may be raised to the necessary unit of char in force in the country of destination.

ARTICLE VI.

Letters, and other communications in manuscript, which, from an cause, cannot be delivered to their address, after the expiration of proper period to effect their delivery shall be reciprocally returned ever month, unopened and without charge, to the Post Office Department the despatching country; but newspapers and all other articles of printe matter shall not be returned, but remain at the disposal of the recei ing office.

Letters erroneously transmitted or wrongly addressed, shall be prompt returned to the despatching office without charge.

ARTICLE VII.

To accommodate the Bermuda Government, and at the same tim maintain the condition that postage accounts shall not be kept betwe the two countries, the Post Office Department of the United States w forward, without charge, to the Canada frontier and *vice-versa*, such co respondence, in sealed bags of small weight and bulk, as the Bermu Post Office may exchange directly with the Dominion of Canada, throug the United States; but should the weight and bulk of such mails at a

time be deemed too great to justify this concession, the Post Office Department of the United States reserves the right to withdraw it, upon giving notice to that effect.

ARTICLE VIII.

Letters originating in foreign countries and addressed to the United States or to Bermuda respectively, on which the foreign and international postage charges are fully prepaid, shall, when forwarded in the mails of either country to the other, be delivered in the country of destination free of charge.

Official correspondence between the two Post Departments relating exclusively to the postal service, shall be exempt from postage charges.

ARTICLE IX.

Neither Post Department shall be required to deliver any article received in the mails, the circulation of which shall be prohibited by the laws in force in the country of destination. And any article subject, by the laws of either country, to customs duty or to confiscation, shall, when received in the mails from the other, be treated in accordance with the laws of the receiving country.

ARTICLE X.

The two Post Departments may provide for the transmission of registered articles in the mails exchanged between the two countries.

The registration fee for each article shall be ten cents in the United States and six pence in Bermuda.

ARTICLE XI.

The two Post Departments shall settle, by agreement between them, all measures of detail and arrangement required to carry this Convention into execution, and may modify the same, in like manner, from time to time, as the exigencies of the service may require.

ARTICLE XII.

This Convention shall come into operation on the first day of October, and shall be terminable at any time on a notice, by either office, of six months.

Done in duplicate and signed in Washington on the twenty-ninth day of August, 1876, and in Hamilton on the ninth day of August, 1876.

[SEAL.] JAS. N. TYNER,
Postmaster-General of the United States.
J. H. LEFROY,
Major-General,
Governor and Commander-in-Chief of the Bermudas.

I hereby approve the aforegoing Convention, and in testimony thereof I have caused the seal of the United States to be affixed.

[SEAL.] U. S. GRANT.

By the President:
W. HUNTER,
Acting Secretary of State.

WASHINGTON, *Sept. 4th*, 1876.

ADDITIONAL ARTICLE OF AGREEMENT BETWEEN THE POST-OFFICE DEPARTMENTS OF THE UNITED STATES OF AMERICA AND NEWFOUNDLAND.

SOLE ARTICLE.

It is agreed that the single rate of international letter-postage, in fr to destination, shall be five cents on each letter weighing half an our (15 grammes) or less, and an additional rate of five cents for each ad tional weight of half an ounce (15 grammes) or fraction thereof, the p payment of which shall be compulsory at the office of mailing in eit country.

This article shall take effect immediately, superseding the provisio of the second paragraph of article 3 of the Postal Convention of 20-3 November, 1872, which paragraph is hereby rescinded.

In witness whereof the Postmaster General of the United States o America and the Postmaster General of Newfoundland have heret set their hands and affixed their seals at the date set opposite to each respectively.

[L. S.] JAS. N. TYNER,
Postmaster General of the United States of America.

October 6, 1876.

JOHN DELANEY,
Postmaster General Newfoundland.

September 22, 1876.

I hereby approve the aforegoing additional article, and in testimony thereof I have caused the seal of the United States to be affixed.

[L. S.] U. S. GRANT.

By the President:

JOHN L. CADWALADER,
Acting Secretary of State, Washington.

SPECIAL ARRANGEMENT BETWEEN THE GENERAL POST-OFFICES OF THE UNITED STATES AND THE UNITED KINGDOM, FIXING RATES OF TERRITORIAL TRANSIT-CHARGES ON BRITISH CLOSED MAILS CONVEYED ACROSS THE AMERICAN CONTINENT BETWEEN BOSTON OR NEW YORK AND SAN FRANCISCO.

Whereas Article X of the treaty concerning the formation of a general postal union, signed at Berne October 9, 1874, provides that the territorial transit-charges on the mails conveyed across the United States of America by the railways between New York and San Francisco shall continue to form the object of special arrangements between the post offices concerned; and whereas the territorial transit-rates for the conveyance of correspondence in closed mails through the United States fixed by the eleventh article of the postal convention of November 7-2 1868, between the General Post-Office of the United States of America and the general post-office of the United Kingdom of Great Britain and Ireland, were, by a notice of one year, terminated on the 24th of August, 1876: The undersigned, being thereunto duly authorized by the respective governments and acting for and in behalf of the General Post-Offices of the United States and of the United Kingdom, respectively, do hereby agree that the territorial transit-charges to be paid the British post-office to the United States Post-Office on the Brit

closed mails conveyed on and after the 24th of August, 1876, across the territory of the United States, between Boston or New York and San Francisco, shall be 6 francs per kilogramme of letters and 2 francs per kilogramme of newspapers, other printed matter, and patterns and samples of merchandise.

This agreement shall be terminable at any time on a notice by either office of one year.

In testimony whereof the undersigned have subscribed their names and affixed their seals hereto, at Washington, in duplicate original, this 6th day of October, 1876.

[SEAL.]

JAS. N. TYNER,
Postmaster-General of the United States.
EDW'D THORNTON,
Her Britannic Majesty's Minister.

Table showing the increase and decrease of post-offices in the several States and Territorie also the number of post-offices at which appointments are made by the President and by t Postmaster-General for the year ended June 30, 1876.

States and Territories.	Whole number of post-offices in the United States June 30, 1875.	Whole number of post-offices in the United States June 30, 1876.	Increase.	Decrease.	Number of postmasters appointed by the President June 30, 1875.	Number of postmasters appointed by the President June 30, 1876.	Increase.	Decrease.	Number of postmasters appointed by the Postmaster-General June 30, 1875.	Number of postmasters appointed by the Postmaster-General June 30, 1876.	Increase.	Decrea
Alabama	785	796	11	....	17	17	....	....	768	779	11	....
Alaska	2	2	....	....	.....	.....	....	....	2	2	....	....
Arizona	42	39	....	3	3	3	....	....	39	36	....	3
Arkansas	663	636	....	27	9	9	....	....	654	627	....	27
California	731	763	32	....	32	35	3	....	699	728	29	....
Colorado	188	212	24	....	9	12	3	....	179	200	21	....
Connecticut	435	444	9	....	44	45	1	....	391	399	8	....
Dakota	133	148	15	....	2	2	....	....	131	146	15	....
Delaware	101	102	1	....	6	6	....	....	95	96	1	....
District of Columbia	6	6	....	....	2	2	....	....	4	4	....	....
Florida	206	222	16	....	6	6	....	....	200	216	16	....
Georgia	715	754	39	....	23	23	....	....	692	731	39	....
Idaho	68	74	6	....	2	3	1	....	66	71	5	....
Illinois	1,865	1,887	22	....	136	138	2	....	1,729	1,749	20	....
Indiana	1,494	1,523	29	....	67	68	1	....	1,427	1,455	28	....
Indian Territory	.....	55	55	....	.....	.....	....	....	.....	55	55	....
Iowa	1,352	1,370	18	....	80	84	4	....	1,272	1,286	14	....
Kansas	1,064	1,104	40	....	38	38	....	....	1,026	1,066	40	....
Kentucky	1,062	1,110	48	....	28	28	....	....	1,034	1,082	48	....
Louisiana	338	345	7	....	6	6	....	....	332	339	7	....
Maine	869	877	8	....	28	28	....	....	841	849	8	....
Maryland	606	619	13	....	14	14	....	....	592	605	13	....
Massachusetts	715	721	6	....	100	102	2	....	615	619	4	....
Michigan	1,202	1,225	23	....	70	70	....	....	1,132	1,155	23	....
Minnesota	814	832	18	....	23	23	....	....	791	809	18	....
Mississippi	560	576	16	....	21	21	....	....	539	555	16	....
Missouri	1,525	1,510	....	15	46	46	....	....	1,479	1,464	....	15
Montana	100	94	....	6	4	4	....	....	96	94	....	[illegible]
Nebraska	559	584	25	....	14	15	1	....	545	569	24	....
Nevada	88	92	4	....	9	9	....	....	79	83	4	....
New Hampshire	434	436	2	....	23	23	....	....	411	413	2	....
New Jersey	654	655	1	....	46	47	1	....	608	608	....	....
New Mexico	66	72	6	....	3	3	....	....	63	69	6	....
New York	2,815	2,835	20	....	179	182	3	....	2,636	2,653	17	....
North Carolina	1,045	1,134	89	....	13	13	....	....	1,032	1,121	89	....
Ohio	2,164	2,189	25	....	113	113	....	....	2,051	2,076	25	....
Oregon	268	291	23	....	6	6	....	....	262	285	23	....
Pennsylvania	3,113	3,155	42	....	132	131	....	1	2,981	3,024	43	....
Rhode Island	104	104	....	....	11	11	....	....	93	93	....	....
South Carolina	460	496	36	....	13	13	....	....	447	483	36	....
Tennessee	1,046	1,076	30	....	19	19	....	....	1,027	1,057	30	....
Texas	861	908	47	....	30	30	....	....	831	878	47	....
Utah	171	171	....	....	3	3	....	....	168	168	....	....
Vermont	484	488	4	....	21	21	....	....	463	467	4	....
Virginia	1,404	1,441	37	....	24	24	....	....	1,380	1,417	37	....
Washington	155	148	....	7	3	3	....	....	152	145	....	
West Virginia	746	774	28	....	10	10	....	....	736	764	28	—
Wisconsin	1,229	1,244	15	....	56	56	....	....	1,173	1,188	15	—
Wyoming	40	44	4	....	3	3	....	....	37	41	4	—
Total	35,547	36,383	894	58	1,547	1,568	22	1	34,000	34,815	873	

Total operations of the appointment-office for the year ended June 30, 1876.

States and Territories.	Post-offices.				Postmasters.			Total number of cases.
	Established.	Discontinued.	Names and sites changed.	Appointments on change of names and sites.	Resigned and commissions expired.	Removed.	Deceased.	
.....	65	54	9	7	151	45	8	332
.....	.....	.....	.....	.....	.....	.....	.....	.....
.....	6	9	3	3	7	.....	1	26
.....	83	59	12	2	125	33	7	319
.....	68	36	20	12	132	14	7	277
.....	37	13	8	7	62	5	2	127
.....	11	2	9	1	36	3	4	65
.....	24	9	1	.....	38	8	3	83
.....	2	1	3	3	10	.....	1	17
Columbia.....	.....	.....	.....	.....	.....	.....	.....	.....
.....	31	15	5	2	48	13	3	115
.....	71	32	7	5	123	18	6	257
.....	10	4	.....	.....	11	1	.....	26
.....	80	58	25	24	315	33	19	530
.....	63	34	10	7	314	35	20	476
itory.....	10	6	2	1	8	4	1	31
.....	63	45	17	8	217	49	7	398
.....	78	38	37	23	250	35	11	449
.....	83	35	9	5	159	45	8	339
.....	31	24	6	4	62	25	2	150
.....	13	5	4	2	55	5	11	93
.....	27	14	11	7	82	5	4	143
tts	7	1	7	.....	23	7	1	46
.....	50	27	14	7	158	28	8	285
.....	47	29	10	7	132	29	1	246
.....	40	24	5	4	105	24	6	204
.....	77	92	19	5	249	81	17	535
.....	6	12	3	.....	15	9	.....	45
.....	57	32	14	12	98	27	2	230
.....	5	1	1	1	8	6	1	22
hire	5	3	.....	.....	35	7	4	54
.....	8	7	6	.....	37	15	6	79
.....	10	4	1	.....	16	7	3	41
.....	40	20	15	6	221	70	30	396
ina	138	49	15	12	142	48	12	404
.....	39	14	14	9	278	81	21	447
.....	38	15	8	6	68	4	2	135
ia	80	38	36	18	299	83	36	572
d	1	1	1	.....	7	2	1	13
ina.....	56	20	5	1	84	6	.....	171
.....	98	68	9	5	156	23	12	366
.....	95	48	10	5	239	31	16	439
.....	6	6	1	1	19	7	3	42
.....	5	1	7	6	33	14	2	62
.....	100	63	20	3	180	26	11	400
.....	9	16	5	4	39	1	.....	70
ia	72	44	6	2	99	12	6	239
.....	42	27	14	13	176	20	6	285
.....	6	2	2	1	19	1	1	31
otal	1,993	1,157	446	251	5,140	1,045	333	10,114

Statement of the operations of the free-

Post-offices.	Number of carriers in service June 30, 1876.	Delivered.					
		Mail.		Local.		Registered letters.	
		Letters.	Postal cards.	Letters.	Postal cards.		
Albany, N. Y	25	2, 471, 979	244, 567	279, 990	173, 603	3, 962	1,
Allegheny, Pa	11	960, 459	89, 611	120, 487	39, 358	2, 795	
Atlanta, Ga	6	646, 415	108, 454	32, 485	38, 767	9, 133	
Baltimore, Md	62	5, 484, 974	544, 693	940, 799	553, 257	23, 261	1,
Bangor, Me	4	258, 727	41, 592	16, 651	5, 858	2, 797	
Boston, Mass	154	10, 401, 673	1, 673, 978	4, 423, 901	1, 511, 184	73, 120	4,
Bloomington, Ill	6	393, 318	95, 505	32, 449	16, 617	2, 272	
Brooklyn, N. Y	89	4, 668, 435	743, 405	1, 098, 752	592, 869	18, 792	2,
Buffalo, New York	34	3, 486, 200	314, 603	369, 604	239, 189	29, 315	1,
Burlington, Iowa	6	554, 861	73, 527	36, 689	29, 627	2, 482	
Camden, N. J	6	448, 371	78, 465	54, 799	32, 300	1, 085	
Charleston, S. C	8	430, 492	55, 601	46, 179	27, 558	2, 699	
Chicago, Ill	157	16, 788, 399	2, 143, 540	2, 906, 115	1, 332, 709	137, 569	4,
Cincinnati, Ohio	72	6, 475, 708	719, 581	1, 135, 652	585, 684	23, 240	1,
Cleveland, Ohio	32	3, 568, 666	666, 646	488, 627	229, 187	34, 465	1,
Columbus, Ohio	12	841, 005	150, 916	71, 682	47, 079	3, 811	
Covington, Ky	4	247, 943	34, 034	14, 316	4, 216	942	
Davenport, Iowa	7	468, 816	86, 277	30, 818	19, 841	2, 002	
Dayton, Ohio	12	1, 045, 370	161, 922	122, 626	65, 010	8, 755	
Des Moines, Iowa	6	510, 673	104, 695	49, 307	26, 920	3, 128	
Detroit, Mich	31	4, 471, 074	667, 318	480, 192	150, 433	33, 748	2,
Dubuque, Iowa	5	438, 051	87, 592	22, 409	20, 139	2, 991	
Easton, Pa	6	660, 856	114, 369	43, 844	14, 117	1, 220	
Elizabeth, N. J	6	469, 828	62, 899	72, 044	16, 836	1, 065	
Elmira, N. Y	6	674, 920	105, 862	44, 730	23, 137	3, 447	
Erie, Pa	7	596, 295	42, 735	50, 361	32, 684	711	
Evansville, Ind	7	535, 997	91, 696	18, 654	23, 047	2, 717	
Fall River, Mass *	4	327, 004	27, 814	35, 176	12, 700	786	
Fort Wayne, Ind	7	802, 366	89, 912	96, 317	84, 070	2, 807	
Grand Rapids, Mich	8	968, 799	160, 769	109, 396	42, 817	5, 409	
Harrisburgh, Pa	6	350, 068	60, 988	26, 473	12, 989	820	
Hartford, Conn	11	884, 462	157, 353	192, 719	89, 452	2, 501	
Hoboken, N. J	4	235, 138	40, 804	16, 072	21, 202	1, 213	
Indianapolis, Ind	28	2, 925, 542	387, 378	281, 473	166, 320	24, 851	1,
Jersey City, N. J	14	1, 262, 889	88, 903	117, 405	66, 179	2, 651	
Kansas City, Mo	11	1, 333, 137	173, 305	88, 374	55, 057	7, 560	
La Fayette, Ind	5	331, 319	73, 454	28, 714	6, 810	1, 181	
Lancaster, Pa	5	513, 389	67, 090	23, 894	16, 000	1, 279	
Lawrence, Mass	8	656, 055	56, 810	38, 101	45, 013	887	
Leavenworth, Kans	5	330, 972	62, 182	16, 361	11, 165	1, 545	
Louisville, Ky	30	2, 835, 060	457, 916	300, 596	255, 063	16, 502	1,
Lowell, Mass	10	664, 068	90, 434	66, 477	39, 226	1, 649	
Lynn, Mass	7	522, 844	92, 090	35, 463	45, 401	420	
Manchester, N. H †	5	536, 385	87, 269	30, 942	33, 518	2, 544	
Memphis, Tenn	13	1, 366, 221	156, 879	101, 355	46, 097	10, 396	
Milwaukee, Wis	26	3, 253, 376	242, 136	248, 636	230, 238	17, 898	
Minneapolis, Minn	9	633, 754	64, 861	68, 484	34, 557	2, 342	
Mobile, Ala	6	269, 371	33, 327	22, 958	9, 781	820	
Nashville, Tenn	10	1, 012, 479	152, 202	73, 026	44, 261	9, 661	
Newark, N. J	24	1, 831, 716	320, 407	396, 968	181, 856	10, 006	
New Bedford, Mass	7	665, 178	54, 134	35, 395	21, 511	726	
New Haven, Conn	14	824, 689	105, 032	123, 350	55, 058	1, 711	
New Orleans, La	47	1, 559, 838	147, 575	273, 861	180, 148	8, 948	
New York, N. Y	429	34, 144, 052	3, 913, 615	21, 070, 850	5, 860, 871	234, 931	8, 5
Norfolk, Va	6	551, 975	70, 426	35, 029	25, 960	1, 047	
Omaha, Nebr	6	561, 396	83, 437	44, 947	23, 349	4, 262	
Oswego, N. Y	6	402, 513	62, 992	30, 912	11, 609	1, 187	
Paterson, N. J	7	422, 277	43, 342	53, 080	22, 409	1, 407	
Peoria, Ill	8	606, 575	113, 268	37, 541	22, 556	2, 687	
Petersburgh, Va	5	367, 740	45, 577	18, 967	9, 466	2, 117	
Philadelphia, Pa	247	20, 413, 437	2, 514, 511	11, 315, 781	3, 368, 066	78, 256	10, 9
Pittsburgh, Pa	34	2, 377, 897	214, 786	473, 887	158, 918	8, 239	1, 1
Portland, Me	10	610, 490	109, 186	55, 403	53, 977	1, 830	
Pottsville, Pa	4	268, 347	45, 731	28, 400	9, 500	836	
Poughkeepsie, N. Y	6	585, 457	54, 435	52, 786	47, 825	1, 117	
Providence, R. I	20	1, 058, 067	138, 303	296, 095	72, 543	2, 460	
Quincy, Ill	7	490, 041	105, 292	32, 531	23, 554	3, 747	
Reading, Pa	9	670, 108	87, 671	58, 956	36, 817	1, 485	
Richmond, Va	16	1, 245, 563	189, 167	91, 160	71, 557	8, 549	
Rochester, N. Y	23	2, 598, 938	146, 718	193, 281	170, 262	10, 427	1, 1
Saint Joseph, Mo	7	678, 435	102, 794	38, 259	23, 282	5, 003	
Saint Louis, Mo	107	9, 614, 250	1, 068, 578	1, 273, 709	876, 448	66, 949	3, 7

* *Eight* carriers at this office until October 1, 1875, and seven until June 1, 1876.

system for the year ended June 30, 1876.

Collected.			Pieces handled.		Cost of service, (including incidental expenses.)			Postage on local matter.
Letters.	Postal cards.	Newspapers.	Aggregate.	Per carrier.	Aggregate.	Per piece.	Per carrier.	
						Mills.		
1,733,746	225,272	217,056	6,372,815	254,913	$21,083 63	3.31	$843 34	$8,715 05
691,422	72,101	63,666	2,692,299	244,754	8,885 68	3.30	807 79	3,256 19
459,501	124,161	41,525	1,708,693	284,782	4,354 00	2.55	725 67	1,897 44
6,477,733	1,079,422	351,946	17,310,982	279,209	57,445 96	3.32	926 55	30,354 55
364,481	73,825	31,374	939,588	234,897	3,447 30	3.66	861 82	1,023 98
16,504,786	2,957,651	2,964,281	45,155,287	293,216	122,828 71	2.72	797 59	149,276 75
222,684	73,842	24,556	1,104,583	184,097	4,520 95	4.09	753 49	1,447 27
2,389,283	803,965	374,459	14,332,127	161,035	81,133 39	5.66	911 61	45,373 25
2,149,683	423,460	236,593	9,140,980	268,852	32,254 36	3.52	948 66	12,234 49
476,353	87,089	170,955	1,876,827	312,805	4,272 84	2.28	712 14	1,292 23
244,640	52,052	32,946	1,204,207	200,701	4,529 52	3.76	754 92	1,768 16
353,347	58,359	42,344	1,257,717	157,215	5,882 43	4.67	735 30	2,369 22
18,976,744	4,329,318	4,338,570	55,584,721	354,043	142,226 67	2.56	906 54	78,012 57
3,902,439	768,863	334,585	15,650,770	217,372	65,799 18	4.20	913 88	47,838 17
2,694,269	700,362	295,352	10,366,680	323,959	30,356 41	2.93	948 64	17,366 72
683,322	162,024	49,617	2,414,158	201,180	9,558 97	3.96	796 58	3,482 84
112,608	15,572	8,302	601,103	150,276	2,761 70	4.59	690 42	675 28
267,075	66,468	22,277	1,276,840	182,406	5,628 38	4.41	804 05	1,335 60
905,849	245,993	367,634	3,512,447	292,704	9,656 46	2.75	804 70	3,647 12
341,599	74,666	42,758	1,468,389	244,732	4,959 30	3.37	826 55	1,932 74
2,156,331	440,832	231,208	10,640,057	343,228	28,478 24	2.68	918 65	11,855 20
441,530	126,548	54,475	1,502,495	300,499	3,779 40	2.51	755 88	1,018 85
544,396	101,168	315,287	2,098,635	349,773	4,754 74	2.26	792 46	1,303 69
268,696	43,294	25,607	1,319,201	219,867	4,790 70	3.63	798 45	1,666 24
254,621	59,891	24,021	1,480,026	246,671	4,568 90	3.09	761 48	1,716 90
272,718	50,827	31,126	1,506,754	215,251	6,204 87	4.12	886 41	1,942 28
380,110	97,042	30,913	1,490,085	212,869	5,165 25	3.45	737 89	833 00
184,444	17,365	31,689	931,028	232,757	4,483 87	4.82	1,120 97	1,929 88
773,169	111,415	97,213	2,680,552	382,936	5,163 10	1.92	737 59	4,249 31
736,949	128,817	55,140	2,772,455	346,557	5,933 26	2.14	741 66	3,820 92
140,994	28,808	14,409	906,910	151,152	4,519 43	4.98	753 24	1,547 46
544,643	95,347	65,992	2,657,875	241,625	8,730 77	3.28	793 70	6,926 76
107,507	23,901	6,199	532,265	133,066	3,006 92	5.67	751 73	705 66
1,588,270	367,357	177,262	7,089,185	253,185	23,198 41	3.27	828 51	11,577 75
534,368	68,871	68,477	2,624,313	187,451	11,455 33	4.36	818 24	4,198 48
806,805	151,723	101,581	3,474,566	315,870	8,914 60	2.56	810 42	6,987 66
213,338	52,226	17,887	956,464	191,293	3,303 14	3.45	660 63	845 23
132,338	25,739	34,964	1,081,277	216,255	3,907 90	3.61	781 58	821 91
804,985	72,370	43,015	1,885,822	235,728	6,586 52	3.49	823 31	1,696 68
281,404	45,906	27,226	1,014,389	202,878	3,314 20	3.26	662 84	690 43
1,334,998	475,714	227,492	7,236,688	241,232	27,386 14	3.64	912 87	9,745 44
706,415	96,998	48,353	2,025,969	202,597	7,470 13	2.33	747 01	3,622 04
345,212	82,727	35,167	1,418,897	202,700	6,388 78	4.50	912 68	1,611 80
302,071	73,892	111,172	1,660,637	332,127	6,199 93	3.73	1,239 99	1,251 85
762,539	113,427	91,982	3,049,016	234,540	9,808 44	3.22	745 50	2,610 87
1,717,172	339,159	209,215	7,080,439	272,325	24,933 28	3.38	958 97	15,008 37
499,977	90,867	54,095	1,980,176	220,020	7,260 90	3.66	806 77	3,337 18
489,850	68,615	131,374	1,275,376	212,563	3,857 32	3.02	642 89	1,839 40
560,058	117,764	87,051	2,676,708	267,671	9,072 83	3.39	907 28	2,538 00
1,602,899	204,398	124,163	4,947,320	206,138	22,062 06	4.46	919 25	11,250 77
309,089	48,290	14,444	1,512,717	216,102	5,569 31	3.68	795 62	1,865 39
733,566	77,913	68,431	2,642,542	188,753	11,850 50	4.48	846 46	10,162 58
2,294,988	379,834	679,531	6,245,899	132,891	39,928 55	6.39	849 54	10,626 59
57,562,359	6,896,415	4,812,111	143,040,255	333,427	375,368 26	2.62	874 98	993,240 22
578,988	113,808	50,195	1,621,842	270,307	4,492 90	2.77	748 82	1,671 88
319,448	78,142	31,106	1,475,542	245,924	4,639 83	3.14	773 30	2,039 87
294,390	53,564	25,866	1,072,181	178,697	4,706 27	4.39	784 71	913 84
262,572	43,614	28,228	1,129,629	161,376	5,611 82	4.81	801 69	1,713 40
579,655	155,622	61,098	1,886,999	235,875	6,188 14	3.22	773 52	1,461 57
285,380	51,177	22,682	967,502	193,500	3,495 54	3.61	699 11	544 83
36,900,635	4,649,993	4,837,424	84,992,249	344,098	231,645 61	2.72	937 84	294,322 29
1,774,105	283,689	189,225	6,625,127	194,857	27,728 24	4.18	815 54	18,105 52
825,623	169,799	90,462	2,470,133	247,013	8,783 95	3.55	878 39	3,525 85
142,410	26,844	49,661	833,539	208,385	2,895 20	3.47	723 80	1,087 14
639,367	100,824	138,034	2,081,204	346,867	4,341 54	2.08	723 59	1,884 93
567,222	78,155	21,240	2,789,849	139,492	16,584 45	5.09	829 22	13,749 14
311,423	97,911	41,503	1,545,206	220,744	5,727 78	3.61	818 25	1,429 44
381,602	68,802	34,239	1,732,292	192,477	7,496 97	4.33	833 00	2,035 62
910,123	177,274	103,322	3,306,475	206,655	12,527 51	3.78	782 97	3,532 05
2,321,862	161,809	171,817	6,875,835	298,949	17,940 62	2.60	780 03	10,015 90
473,193	116,746	113,187	2,054,030	293,433	4,899 20	2.38	699 89	2,154 38
7,031,849	1,411,819	1,951,020	27,043,402	252,742	98,539 92	3.64	920 93	38,164 59

† Seven carriers at this office until June 1, 1876.

Statement of the operations of the free-delivery syste

Post-offices.	Number of carriers in service June 30, 1876.	Delivered.					
		Mail.		Local.		Registered letters.	Newspapers.
		Letters.	Postal cards.	Letters.	Postal cards.		
Saint Paul, Minn	10	886, 488	173, 472	54, 251	40, 940	9, 608	578, 402
Salem, Mass	6	355, 974	54, 310	36, 913	32, 171	8	315, 131
San Francisco, Cal	42	3, 099, 257	216, 532	1, 222, 402	612, 008	11, 399	1, 340, 611
Savannah, Ga	6	484, 197	81, 797	70, 720	19, 687	2, 294	229, 314
Springfield, Mass	8	798, 839	108, 000	104, 387	32, 770	1, 232	308, 980
Springfield, Ill	5	378, 400	74, 476	22, 881	15, 943	1, 298	231, 219
Syracuse, N. Y	17	1, 787, 567	234, 266	177, 002	135, 151	7, 291	902, 883
Toledo, Ohio	15	1, 419, 327	135, 019	118, 719	87, 411	6, 170	613, 473
Trenton, N. J	6	421, 376	45, 742	40, 305	21, 681	899	258, 554
Troy, N. Y	15	1, 727, 519	241, 262	197, 318	90, 841	3, 819	803, 995
Utica, N. Y	13	1, 105, 397	192, 150	120, 063	60, 078	5, 215	512, 143
Washington, D. C	37	2, 611, 478	213, 434	344, 711	132, 438	6, 999	1, 341, 801
Wheeling, W. Va	6	666, 979	121, 727	41, 073	19, 953	6, 628	352, 613
Wilmington, Del	10	647, 153	86, 773	73, 776	43, 956	1, 704	317, 255
Worcester, Mass	11	706, 310	108, 485	96, 610	72, 418	31	348, 825
Total aggregates and averages	2, 269	189, 659, 443	23, 952, 381	53, 773, 953	19, 963, 290	1, 069, 698	80, 675, 040
Salary of special agents of the Post-Office Department paid out of appropriations for letter-carrie							
Total							

for the year ended June 30, 1876—Continued.

Collected.			Pieces handled.		Cost of service, (including incidental expenses.)			Postage on local matter.
Letters.	Postal cards.	Newspapers.	Aggregate.	Per carrier.	Aggregate.	Per piece.	Per carrier.	
						Mills.		
739, 020	157, 442	73, 965	2, 706, 588	270, 659	$7, 462 42	2. 75	$746 24	$2, 725 02
279, 496	53, 770	44, 223	1, 171, 996	195, 333	5, 211 68	4. 45	868 61	1, 540 63
4, 945, 292	683, 634	838, 052	12, 969, 187	308, 790	41, 307 98	3. 26	983 52	65, 525 76
421, 596	69, 398	34, 022	1, 413, 025	235, 504	4, 127 00	2. 21	687 83	2, 690 89
456, 651	81, 747	49, 423	1, 942, 029	242, 754	6, 121 85	3. 15	765 23	3, 822 49
223, 669	62, 540	58, 364	1, 068, 790	213, 758	3, 685 35	3. 44	737 07	959 17
1, 603, 933	218, 634	165, 640	4, 722, 367	277, 786	14, 188 53	3. 00	834 62	5, 231 45
1, 196, 025	274, 453	198, 733	4, 049, 330	269, 955	12, 637 77	3. 12	842 52	4, 785 76
347, 375	47, 266	33, 104	1, 216, 302	202, 717	4, 656 24	3. 82	776 04	1, 759 68
1, 412, 359	203, 315	334, 116	5, 014, 544	334, 303	12, 056 37	2. 40	803 76	5, 717 05
897, 830	187, 747	95, 706	3, 176, 329	244, 333	11, 094 00	3. 49	853 39	3, 943 31
1, 823, 395	222, 842	284, 976	6, 982, 004	188, 703	34, 929 55	5. 00	944 04	20, 226 41
558, 186	108, 916	62, 434	1, 938, 509	323, 085	4, 322 76	2. 23	720 46	1, 349 81
307, 153	76, 790	15, 339	1, 569, 899	156, 990	8, 012 73	5. 10	801 27	2, 703 26
444, 549	92, 492	45, 612	1, 915, 332	174, 121	9, 323 31	4. 86	847 57	5, 784 39
20, 280, 079	33, 950, 503	28, 453, 086	631, 777, 473	.....	1, 976, 486 85	3. 13	.....	2, 065, 561 73
from July 1, 1875					4, 699 66			
.....					1, 981, 186 51			

ANNUAL REPORT

OF THE

UDITOR OF THE TREASURY

FOR THE

POST-OFFICE DEPARTMENT

TO THE POSTMASTER-GENERAL

FOR THE

FISCAL YEAR ENDED JUNE 30, 1876.

OFFICE OF THE AUDITOR OF THE TREASURY
FOR THE POST-OFFICE DEPARTMENT,
October 23, 1876.

I have the honor to submit the following annual report of the ; and expenditures of the Post-Office Department, together with rations of this office in connection therewith, for the fiscal year June 30, 1876.

Collection of post-office revenues.

ıumber of post-offices in operation during the year was 36,495 ıre classified, under the regulations adopted for the government Department, chapter 25, sections 352 to 368, inclusive, as follows: offices, depositing offices, depository and draft offices, and col- offices.

following-named offices are denominated depositories or draft and are required by the Postmaster-General to receive and retain, to the drafts of the Department, the funds of certain adjacent as well as the revenues of their own, viz:

lich., J. H. Fee.
N. Y., J. F. Smyth.
wa, J. H. Morris.
Ga., Benj. Conley.
N. Y., J. B. Richardson.
Me., H. H. Hamlin.
'ex., H. B. Kinney.
Me., A. B. Farnham.
N. Y., Wm. Tyrrell.
, Mich., T. C. Phillips.
ton, N. Y., E. B. Stephens.
on, Vt., B. J. Derby.
on, Ill., J. A. Miles.
d, Ohio, N. B. Sherwin.
s, Ohio, J. M. Comly.
N. H., J. E. Larkin.
Iowa, A. K. Bailey.
Colo., E. C. Sumner.
ies, Iowa, J. S. Clark.
Mich., J. H. Kaple.
, Iowa, G. L. Torbert.
inaw, Mich., T. Saylor.
N. Y., C. G. Fairman.
lle, Ind., T. R. McFerson.
lge, Iowa, N. M. Page.
yne, Ind., J. J. Kamm.
apids, Mich., A. B. Turner.
rgh, Pa., M. W. McAlarey.
, Conn., J. H. Burnham.
n, Mich., F. A. Douglas.
, Tex., T. H. Scanlon.
le, Ala., J. D. Sibley.
olis, Ind., W. R. Holloway.
y, Iowa, M. H. Brainard.
ville, Fla., M. Govin.
wn, N. Y., A. M. Clark.
oo, Mich., L. B. Kendall
. H., A. Smith.
Iowa, J. C. Parrott.
e, Tenn., Wm. Rule.
La Fayette, Ind., J. L. Miller.
Lansing, Mich., S. D. Bingham.
Leavenworth, Kans., D. R. Anthony.
Lexington, Ky., H. K. Milward.
Lima, Ohio, C. Parmenter.
Louisville, Ky., L. M. Porter.
Madison, Wis., E. W. Keyes.
Malone, N. Y., J. J. Seaver.
Marquette, Mich., S. M. Billings.
Marshalltown, Iowa, E. N. Chapin.
Meadville, Pa., L. D. Williams.
Memphis, Tenn., J. Deloach.
Milwaukee, Wis., H. C. Payne.
Mobile, Ala., T. C. Bingham.
Montgomery, Ala., J. J. Martin.
Montpelier, Vt., J. W. Clark.
Mount Pleasant, Iowa, G. W. McAdam.
Nashville, Tenn., H. W. Hasslock.
Newark, N. J., W. Ward.
New Bedford, Mass., T. Coggeshall,
New Haven, Conn., N. D. Sperry.
Norwich, N. Y., E. B. Barrett.
Ogdensburgh, N. Y., R. G. Pettibone.
Olean, N. Y., J. G. Johnson.
Omaha, Nebr., C. E. Yost.
Peoria, Ill., J. S. Stevens.
Pittsburgh, Pa., E. C. Negley.
Plattsburgh, N. Y., H. S. Ransom.
Portland, Me., C. W. Goddard.
Portsmouth, N. H., E. G. Pierce.
Portsmouth, Ohio, L. Adair.
Providence, R. I., C. R. Brayton.
Raleigh, N. C., W. W. Holden.
Richmond, Va., E. L. Van Lew.
Rochester, N. Y., D. T. Hunt.
Rutland, Vt., A. H. Tuttle.
Saint Albans, Vt., B. D. Hopkins.
Saint Johnsbury, Vt., C. P. Carpenter.
Saint Paul, Minn., David Day.
Sandusky, Ohio, J. M. Boalt.

Savannah, Ga., J. G. Clark.
Scranton, Pa., J. A. Scranton.
Springfield, Ill., J. L. Crane.
Steubenville, Ohio, J. M. Reed.
Springfield, Mass., H. C. Lee.
Syracuse, N. Y., A. C. Chase.
Taunton, Mass., E. E. Fuller.
Terre Haute, Ind., N. Fillbeck.
Toledo, Ohio, P. H. Darling.
Towanda, Pa., S. W. Alvord.
Urbana, Ohio, D. C. Hitt.
Utica, N. Y., C. H. Hopkins.
Watertown, N. Y., W. G. Williams
Wellsborough, Pa., G. W. Merrick.
Wheeling, W. Va., C. J. Rawling.
Williamsport, Pa., R. Hawley.
Winona, Minn., D. Sinclair.
Wooster, Ohio, A. S. McClure.
Worcester, Mass., J. Pickett.
Zanesville, Ohio, J. C. Douglas.

The following officers receive and retain, subject to the warra the Post-Office Department, the funds of such post-offices as s structed to deposit in their hands, viz:

The Treasurer of the United States, at Washington, D. C.—The Assistant Treas the United States at

New York, N. Y.
Baltimore, Md.
New Orleans, La.
Cincinnati, Ohio.
Saint Louis, Mo.
Philadelphia, Pa.
Boston, Mass.
Charleston, S. C.
Chicago, Ill.
San Francisco, Cal.

One hundred post-offices are draft offices, and during the year paid 19,446 drafts, issued by the Postmaster-General, countersigned, entered, and sent out by the Auditor, for sums in the aggregate of	$1,668,
Twenty-six hundred and sixty-six are deposit offices, a portion of which during the year deposited with the Treasurer and Assistant Treasurers of the United States the sum of	4,361,
Thirty-one thousand six hundred and eighty-seven offices are collection offices, and paid on collection-orders issued to mail-contractors the sum of	4,373
Two thousand two hundred and fifteen offices are special offices, and derive their mail supplies by the payment of the revenue of their offices therefor, amounting to	52
Three thousand eight hundred and seventy-nine post-offices are supplied by mail-messengers, for which service there was paid during the year	632

Revenue account of the Post-Office Department.

The receipts of the Department for the fiscal year ended June 30, 1876, were		$28,644
The amount placed in the Treasury for the service of the Department for the fiscal year, being grants in aid of the revenue, under the following acts of Congress, were:		
Under the second section of the act approved March 3, 1875, for mail-steamship service between San Francisco, Japan, and China	$500,000 00	
Under the second section of the act approved March 3, 1875, for mail-steamship service between the United States and Brazil	37,500 00	
Under the act approved June 12, 1876, private No. 51, to pay Jackson T. Sorrells for carrying the mails in North Carolina in 1865	53 80	
Under the first section of the act approved March 3, 1871, for supplying deficiency in the revenue of the Post-Office Department for the fiscal year ended June 30, 1871	14,146 38	
Under the third section of the act approved March 3, 1871, for supplying deficiency in the revenue of the Post-Office Department for the fiscal year ended June 30, 1872	3,393 98	
Under the third section of the act approved June 23, 1874, for supplying deficiency in the revenue of the Post-Office Department for the fiscal year ended June 30, 1875	533,488 87	

Under the third section of the act approved March 3, 1875, for supplying deficiency in the revenue of the Post-Office Department for the fiscal year ended June 30, 1876	$4,000,000 00	
		$5,088,583 03
Aggregate of revenues and grants		33,732,780 53
The expenditures of the Department for the fiscal year ended June 30, 1876, were		33,263,487 58
Excess of receipts		469,292 95
The balance standing to the credit of the revenue account at the close of the fiscal year ended June 30, 1876, was	$2,591,851 06	
Add amount of credits balance accounts closed by "suspense" to close of fiscal year	332,406 20	
Total	2,924,257 26	
Deduct amount of debit balances closed by "bad debt" and "compromise" accounts to close of fiscal year	966,768 64	
Leaving to the credit of the revenue account		$1,957,488 62

This amount includes all balances now in suit and in the hands of postmasters.

The net revenue of the Department from postages, being the aggregate of balances due the United States by postmasters on the adjustment of their quarterly accounts for the year, after deducting their compensation and the expenses of their offices, was:

For the quarter ended September 30, 1875	$3,661,106 53
For the quarter ended December 31, 1875	4,026,296 89
For the quarter ended March 31, 1876	4,221,410 06
For the quarter ended June 30, 1876	3,786,053 19
Total	15,694,866 67

The amount of letter-postages paid in money was:

For the quarter ended September 30, 1875	$49,539 24
For the quarter ended December 31, 1875	58,937 79
For the quarter ended March 31, 1876	65,548 97
For the quarter ended June 30, 1876	50,766 37
Total	224,792 37

The amount of stamps, stamped envelopes, newspaper and periodical stamps, postal cards, and newspaper-wrappers sold was:

For the quarter ended September 30, 1875	$6,286,129 29
For the quarter ended December 31, 1875	6,832,277 81
For the quarter ended March 31, 1876	7,002,974 39
For the quarter ended June 30, 1876	6,758,130 61
Total	26,879,512 10

The amount of official stamps furnished the different Departments, and included in the above amount of stamps sold, was:

To the Executive Office	$600 00
To the Department of State	3,060 00
To the Navy Department	14,460 00
To the War Department	80,486 93
To the Agricultural Department	1,400 00
To the Interior Department	100,960 00
To the Department of Justice	3,476 00
To the Treasury Department	97,900 00
To the Post-Office Department	979,046 50
Total	1,281,389 43

The number of quarterly returns of postmasters received and audited, on which th $15,694,866.67 was found due the United States, was:

For the quarter ended September 30, 1875	
For the quarter ended December 31, 1875	
For the quarter ended March 31, 1876	
For the quarter ended June 30, 1876	
Total	

MAIL-TRANSPORTATION.

The amount charged to transportation accrued and placed credit of mail-contractors and others for mail-transportation d the year, was:

For the regular service of mail-routes	$15,099
For the supply of special and mail-messenger offices	684
For the salaries of postal-railway clerks, route and other agents	2,412
For the salaries and per diem of the assistant superintendents of the postal-railway service	46
Total	$18,243

FOREIGN-MAIL TRANSPORTATION.

San Francisco, Japan, and China	$502,531 23	
United States and Brazil	37,561 96	
New York, Great Britain, and Ireland	91,896 64	
New York, England, France, and Germany	30,798 57	
New York, England, and Bremen	28,659 80	
New York, San Francisco, and South American States, via Panama	16,033 74	
New York and Great Britain	13,656 58	
New York, Philadelphia, England, France, and Germany	8,064 74	
New York, Havana, New Orleans, and Vera Cruz	12,895 89	
New York and West Indies	7,448 76	
Chicago, Detroit, Portland, and Great Britain	3,603 05	
New York and Glasgow	2,246 72	
New York, West Indies, Brazil, and Argentine Republic	1,204 34	
Boston, Great Britain, and Ireland	2,976 99	
Philadelphia and Queenstown	1,996 06	
France and United States	1,742 94	
New York and South American States, via Aspinwall	1,621 72	
Portland and Nova Scotia	790 23	
New York and Bermuda	779 02	
New Orleans, Key West, and Havana	686 80	
Baltimore, Brazil, Argentine Republic, and West Indies	404 86	
Boston and Nova Scotia	254 47	
New Orleans and Havana	215 14	
Philadelphia, Havana, and New Orleans	207 86	
New York and Venezuela, via West Indies	242 03	
Cleveland and Canada	133 09	
New York and Argentine Republic	78 84	
Baltimore and Bremen	20 71	
Key West and Havana	17 28	
Boston and Great Britain	3 14	
New York and Rotterdam	2 92	
Expenses of Government mail-agent at Panama	1,528 80	
Expenses of Government mail-agent at Aspinwall	940 00	
Expenses of Government mail-agent at Havana	800 00	
		772
		19,015

The amount credited to transportation accrued, and charged to contractors for overcredits, was:

For fines imposed	$3,981 04	
For deductions	116,218 76	
		$120,199 80
Net amount to the credit of mail-contractors and others		18,895,188 14
The amount actually paid during the year was		$18,604,386 95

STATEMENT OF COLLECTING DIVISION.

This division has had charge of 24,760 accounts of postmasters who became late during the period from July 1, 1874, to June 30, 1876.

Amounts collected from postmasters becoming late prior to July 1, 1875:

Collected by draft	$20,245 75
Collected by suit	21,201 99
Credited on vouchers	74,796 38
Charged to suspense	40 26
Charged to bad debts	41,922 17
Charged to compromise debts	908 32
Total	259,114 87

Number of changes of postmasters reported by appointment-office during the fiscal year was 9,497; and the balances due the United States upon the accounts of said late postmasters amounts to		$193,094 46
Of which there has been—		
Collected by draft	$88,403 71	
Credited on vouchers	224 45	
Charged to suspense	211 56	
Charged to bad debts	297 49	
		89,137 21
Total remaining due		103,957 25
Of which there is—		
In suit	$376 81	
Not in suit	103,580 44	
		103,957 25

Amount reported due late postmasters, late prior to July 1, 1875:		
As per last report		$85,002 04
Decrease during the fiscal year		1,298 85
Amount remaining due		83,703 19
Amount paid thereon	$51,856 76	
Amount closed by suspense	5,573 35	
Amount remaining due June 30, 1876	26,273 08	
		83,703 19
Amount due postmasters late during the fiscal year		$38,047 63
Amount paid thereon	$11,383 46	
Amount closed by suspense	270 97	
Amount remaining due	26,393 20	
		38,047 63
Amount due by late postmasters for which suit has been brought during the fiscal year		$70,139 07
Amount collected by suit during the fiscal year		21,201 99

The subjoined tables, numbered from 1 to 38, inclusive, exhibit in detail the transactions of the Department for the fiscal year.

I have the honor to be, very respectfully,

J. M. McGREW, *Auditor.*

Hon. JAS. N. TYNER,
Postmaster-General.

No. 1.—*Statement exhibiting quarterly the receipts of the Post-Office Department, un several heads, for the fiscal year ended June* 30, 1876.

Receipts.	Quarter ended September 30, 1875.	Quarter ended December 31, 1875.	Quarter ended March 31, 1876.	Quarter ended June 30, 1876.	Ag
Letter-postage	$49, 539 24	$58, 937 79	$65, 548 97	$50, 766 37	$
Book, newspaper, and pamphlet postage	148 50	48 69	13 87	.....	
Box-rents and branch offices	330, 607 39	325, 963 73	321, 478 70	327, 877 23	1,
Fines and penalties	756 05	1, 028 13	989 77	584 06	
Postage-stamps, stamped envelopes, and postal cards	6, 286, 129 29	6, 832, 277 81	7, 002, 974 39	6, 758, 130 61	26,
Dead letters	2, 866 53	4, 380 17	893 00	1, 749 50	
Revenue from money-order business	.....	.....	.....	190, 770 84	
Miscellaneous	7, 735 71	7, 974 78	6, 739 25	7, 287 13	
Total	6, 677, 782 71	7, 230, 611 10	7, 398, 637 95	7, 337, 165 74	28,

J. M. McGREW, .

OFFICE OF THE AUDITOR OF THE TREASURY
FOR THE POST-OFFICE DEPARTMENT, *October* 23, 1876.

No. 2.—*Statement exhibiting quarterly the expenditures of the Post-Office Department, under their several heads, for the fiscal year ended June 30, 1876.*

Expenditures.	Quarter ended September 30, 1875.	Quarter ended December 31, 1875.	Quarter ended March 31, 1876.	Quarter ended June 30, 1876.	Aggregate.	Paid for previous years, but included in aggregate.
Compensation of postmasters	$1,777,353 76	$1,825,059 83	$1,931,130 00	$1,863,854 32	$7,397,397 91	$15,937 49
Compensation of clerks for post-offices	864,423 11	864,970 19	854,852 43	896,484 42	3,480,730 15	763 90
Compensation of letter-carriers and incidental expenses	490,951 02	497,399 97	497,304 53	495,139 50	1,980,795 02	.....
Wrapping-paper	3,177 22	8,204 80	3,412 50	3,412 50	18,207 02	.....
Twine	10,046 40	12,939 39	11,474 50	4,258 00	38,718 29	.....
Postmarking and canceling stamps	2,528 05	1,711 37	2,776 73	1,841 75	8,857 90	.....
Letter-balances	677 56	2,123 64	5 13	1,101 06	3,907 39	.....
Rent, light, and fuel for post-offices	86,572 09	98,309 53	98,301 77	107,239 38	390,422 77	.....
Stationery	11,554 31	9,733 27	11,798 69	10,226 56	43,312 83	.....
Furniture for post-offices	5,050 70	4,971 00	3,930 01	5,547 56	19,499 27	.....
Miscellaneous, office of First Assistant Postmaster-General	19,125 73	17,561 18	14,324 18	25,011 57	76,022 66	.....
Inland mail transportation	3,734,087 96	3,827,899 35	3,564,207 48	3,619,651 16	14,745,845 95	424,343 35
Compensation of railway post-office clerks	287,216 29	296,528 31	319,628 56	320,377 03	1,223,750 19	.....
Compensation of route agents	230,209 06	238,085 59	232,038 04	239,819 28	940,151 97	.....
Compensation of mail-route messengers	38,278 28	35,959 69	36,288 89	36,625 41	147,152 27	.....
Compensation of local agents	25,028 21	25,581 09	25,458 71	25,745 26	101,813 27	.....
Compensation of mail-messengers	152,568 01	160,321 19	161,067 10	158,691 73	632,648 03	.....
Mail locks and keys	901 25	10,892 30	3,916 15	.....	15,709 70	.....
Mail bags and catchers	34,286 77	62,395 25	64,009 83	45,825 64	206,517 49	29 40
Post-route maps	8,855 60	8,278 46	6,528 86	.....	23,662 92	.....
Mail depredations and special agents	36,831 71	33,620 40	35,919 66	12,305 17	118,676 94	.....
Postage-stamps	28,468 43	28,466 16	52,711 71	11,141 78	120,788 08	.....
Distribution of postage-stamps	2,067 35	1,508 50	988 74	486 26	5,050 85	.....
Stamped envelopes and newspaper-wrappers	109,898 98	109,444 82	109,027 69	30,228 65	358,600 14	.....
Distribution of stamped envelopes and newspaper-wrappers	3,205 43	2,929 48	2,625 28	1,260 97	10,021 16	.....
Postal cards	59,050 10	53,392 59	56,016 42	13,663 68	182,122 79	.....
Distribution of postal cards	1,760 34	771 08	1,076 10	420 32	4,027 84	.....
Registered-package envelopes, locks, and seals	1,350 66	6,790 29	11,196 03	12,830 61	32,167 59	.....
Official envelopes for postmasters	3,735 95	2,878 40	5,242 48	3,566 48	15,423 31	.....
Dead-letter envelopes	.....	783 00	696 00	800 40	2,279 40	.....
Ship, steamboat, and way letters	1,329 43	971 70	844 17	926 53	4,071 83	.....
Fees to United States marshals, attorneys, clerks of court, and counsel	743 98	1,192 27	2,001 74	965 29	4,903 28	.....
Engraving, printing, and binding drafts and warrants	376 25	408 25	965 00	1 50	1,751 00	.....
Advertising	30,910 98	19,458 56	4,026 25	32,459 35	86,855 14	.....
Miscellaneous, office of Third Assistant Postmaster-General	361 73	173 58	474 15	611 05	1,620 51	.....
Foreign mail transportation	52,844 57	65,038 12	60,557 86	50,682 71	229,123 26	.....
Balance due foreign countries	24,728 76	323 09	4,325 21	3,876 14	33,253 20	25,051 85
Official Postal Guides	6,500 62	2,965 52	6,515 64	2,971 05	18,952 83	.....
Additional compensation of postmasters, 1873–'74, act March 3, 1875	762 65	370 78	42 00	.....	1,175 43	1,175 43
Subsidy—San Francisco, Japan and China, and Brazil lines	162,500 00	125,000 00	125,000 00	125,000 00	537,500 00	.....
Total	8,310,319 30	8,465,411 99	8,322,706 22	8,165,050 07	33,263,487 58	467,301 42

OFFICE OF THE AUDITOR OF THE TREASURY FOR THE POST-OFFICE DEPARTMENT, *October* 23, 1876.

J. M. MCGREW, *Auditor.*

No. 3.—*Statement of the postal receipts and expenditures*

States and Territories.	Letter-postage.	Book, newspaper, and pamphlet postage.	Waste-paper and twine.	Box rents and branch offices.	Postage-stamps, stamped envelopes, and postal cards.	Total receipts.
Maine	$2,559 64	.....	$119 68	$24,128 60	$422,296 50	$449,104 44
New Hampshire	480 86	.....	128 62	14,228 06	262,299 34	277,136 88
Vermont	416 16	.....	152 21	10,632 86	241,920 08	253,121 31
Massachusetts	11,113 61	$37 34	896 69	98,930 18	1,871,740 88	1,982,718 70
Rhode Island	1,030 69	.....	126 33	20,896 50	197,284 34	219,337 86
Connecticut	2,691 53	.....	233 28	37,450 58	569,721 94	610,097 33
New York	82,101 07	6 42	3,344 98	184,650 19	5,334,467 36	5,604,570 02
New Jersey	3,126 90	.....	177 35	25,414 09	554,656 05	583,374 39
Pennsylvania	16,633 70	.....	1,199 20	87,489 26	2,581,324 11	2,686,646 27
Delaware	288 48	.....	16 23	1,307 48	66,861 79	68,473 98
Maryland	8,311 48	1 40	107 57	10,411 56	493,985 95	512,817 96
Virginia	2,167 92	7 16	96 43	12,007 14	391,683 37	405,962 02
West Virginia	792 71	.....	124 03	3,274 90	132,507 54	136,699 18
North Carolina	597 72	1 25	68 65	7,749 99	185,817 36	194,234 97
South Carolina	718 72	.....	57 20	7,458 28	158,940 06	167,174 26
Georgia	1,705 16	11 00	141 24	19,006 99	292,010 52	312,874 91
Florida	986 48	.....	19 20	4,752 98	69,066 85	74,825 51
Ohio	5,606 98	11 86	1,263 82	78,830 86	1,766,129 69	1,851,843 21
Michigan	6,192 41	78 22	602 95	62,900 42	818,963 93	888,737 93
Indiana	2,512 53	1 75	558 59	45,302 95	732,106 23	780,482 05
Illinois	13,658 50	6 23	2,625 91	103,251 25	2,136,232 01	2,255,773 90
Wisconsin	3,701 19	.....	362 10	44,862 04	611,756 94	660,682 27
Iowa	3,685 35	.....	443 85	60,788 64	786,324 91	851,242 75
Missouri	5,421 71	.....	785 45	30,899 32	917,252 25	954,358 73
Kentucky	1,521 66	7 35	241 15	16,056 06	419,093 38	436,919 60
Tennessee	1,196 56	80	143 42	10,388 51	298,236 94	309,966 23
Alabama	1,197 33	48 01	48 00	13,095 59	202,288 32	216,677 25
Mississippi	670 41	1 05	60 15	13,042 49	153,451 57	167,225 67
Arkansas	301 28	12 58	42 32	8,242 32	115,503 89	124,102 39
Louisiana	3,667 40	13 60	94 05	20,992 80	254,535 08	279,302 93
Texas	3,309 68	.....	196 16	36,523 29	379,378 25	419,407 38
California	7,695 47	14 72	223 12	60,261 26	740,904 38	809,098 95
Oregon	117 12	.....	43 26	9,441 64	76,702 44	86,304 46
Minnesota	3,804 05	2 70	223 51	22,836 05	326,154 70	353,021 01
Kansas	1,147 33	.....	167 63	25,164 37	311,652 92	338,132 25
Nebraska	654 78	.....	76 03	11,088 74	157,439 79	169,259 34
Nevada	414 81	.....	28 21	13,993 83	65,060 73	79,497 58
Colorado	484 58	.....	154 83	19,343 73	107,379 02	127,362 16
Utah	293 28	.....	67 64	5,279 52	64,904 46	70,544 90
New Mexico	71 50	.....	11 26	1,525 15	17,910 52	19,518 43
Washington	73 05	.....	13 91	2,095 13	24,270 67	26,452 76
Dakota	144 59	.....	6 60	1,638 73	28,273 73	30,063 65
Arizona	21 68	.....	15 25	965 90	10,980 09	11,982 92
Idaho	53 57	.....	23 45	2,106 90	14,658 37	16,842 29
Wyoming	59 38	.....	18 45	2,626 63	41,227 97	43,932 43
Montana	62 25	.....	12 96	5,430 69	24,899 74	30,405 64
Alaska	5 01	.....	1 00	8 00	352 47	366 48
District of Columbia	2,445 63	.....	63 60	6,378 34	175,886 63	184,774 20
	205,913 90	263 44	15,627 52	1,305,150 79	25,606,496 06	27,133,451 71
Deduct miscellaneous items	.....	52 38	.....	.....	.....	.....
Add miscellaneous items	18,878 47	.....	.....	776 26	1,273,016 04	1,292,618 39
	224,792 37	211 06	15,627 52	1,305,927 05	26,879,512 10	28,426,070 10

NOTE.—The following items of expenditure and revenue, being of a general nature, are not embraced

Amount paid for foreign mails and expenses of Government agents	$766,623 96
Balances due foreign countries	33,253 20
Ship, steamboat, and way letters	4,071 83
Wrapping-paper	18,207 02
Twine	38,718 29
Office-furniture	1,113 20
Advertising	73,395 38
Mail bags and catchers	176,512 12
Salary and per diem of assistant superintendents of postal-railway service	46,402 01
Mail locks and keys	15,709 70
Postmarking and canceling stamps	8,857 96
Mail depredations and special agents	118,676 94
Letter-balances	3,907 38
Expenses of postage-stamps, stamped envelopes, and postal cards	680,610 71
Dead-letter, official, and registered envelopes, locks, and seals	49,870 38
Additional compensation to postmasters for year ended June 30, 1874. Act of Mar. 3, 1875	1,175 40
Sundry and miscellaneous payments	56,018 82
Excess of expenditures brought down	3,076,075 92
	5,169,199 00

OFFICE OF THE AUDITOR OF THE TREASURY
FOR THE POST-OFFICE DEPARTMENT, October 23, 1876.

United States for the fiscal year ended June 30, 1876.

Compensation of postmasters.	Clerks for offices, rent, light, and fuel, and incidental expenses of post-offices.	Compensation of letter-carriers.	Compensation of route-agents, postal-railway clerks, mail-messengers, and supply of special offices.	Transportation by States.	Total expenses.	Excess of expenditures over receipts.	Excess of receipts over expenditures.
343 62	$48, 544 50	$12, 231 25	$46, 808 44	$232, 654 11	$519, 581 92	$70, 477 50	.....
516 89	18, 965 73	6, 199 93	23, 995 50	99, 224 30	271, 902 35	.....	$5, 234 53
903 36	15, 689 29	.....	22, 044 97	158, 159 80	317, 797 42	64, 676 11	.....
454 11	328, 404 44	174, 003 72	181, 673 60	432, 420 92	1, 496, 956 79	.....	485, 761 91
042 70	27, 047 73	16, 584 45	8, 014 96	46, 918 91	142, 608 75	.....	76, 729 11
522 65	72, 356 08	20, 581 27	55, 150 84	199, 440 03	534, 050 87	.....	76, 046 46
530 25	1, 107, 231 34	578, 737 87	386, 772 58	1, 370, 623 81	4, 232, 995 85	.....	1, 371, 574 17
785 20	46, 404 76	56, 112 59	31, 495 64	235, 022 21	569, 820 40	.....	13, 553 99
516 47	352, 350 95	298, 038 64	198, 196 76	840, 852 16	2, 313, 054 98	.....	373, 591 29
539 39	5, 592 36	8, 012 73	8, 735 42	30, 073 17	75, 053 07	6, 579 09	.....
580 29	86, 432 57	57, 445 96	38, 798 30	360, 334 96	633, 792 08	120, 974 12	.....
099 30	52, 628 19	20, 515 95	40, 280 45	405, 651 22	674, 175 11	268, 213 09	.....
890 24	14, 167 97	4, 322 76	18, 028 23	136, 887 75	235, 796 95	99, 097 77	.....
715 88	18, 712 43	.....	40, 619 42	231, 639 86	383, 687 59	189, 452 62	.....
45 03	13, 826 42	5, 882 43	17, 700 06	126, 315 03	236, 868 97	69, 694 71	.....
917 40	48, 962 32	8, 481 00	50, 856 89	288, 699 45	512, 817 06	199, 942 15	.....
514 02	6, 546 05	.....	13, 198 36	119, 076 08	173, 434 51	98, 609 00	.....
865 35	203, 456 51	128, 008 79	356, 027 83	1, 281, 425 22	2, 465, 183 70	613, 340 49	.....
851 33	97, 722 90	34, 411 50	75, 642 40	448, 924 36	988, 252 49	99, 514 56	.....
938 91	89, 050 54	36, 829 90	123, 827 33	432, 763 85	982, 910 53	202, 428 48	.....
572 66	425, 645 08	162, 448 89	342, 870 83	1, 085, 660 40	2, 598, 497 86	342, 723 96	.....
018 87	64, 311 94	24, 933 28	82, 635 20	360, 327 93	787, 227 22	126, 544 95	.....
984 59	65, 988 01	18, 639 92	137, 296 94	519, 422 01	1, 098, 731 47	247, 488 72	.....
823 80	158, 325 14	112, 353 72	130, 675 93	693, 689 73	1, 333, 968 32	379, 609 59	.....
855 22	47, 658 18	30, 147 84	47, 549 47	275, 869 08	538, 879 79	101, 960 19	.....
926 14	47, 347 35	18, 881 27	90, 193 78	241, 793 97	506, 042 51	196, 076 28	.....
763 30	27, 169 89	3, 857 32	33, 138 51	276, 850 15	436, 779 17	220, 101 92	.....
721 32	13, 869 40	.....	14, 272 96	283, 572 66	403, 636 34	236, 410 67	.....
992 56	14, 083 34	.....	14, 119 96	264, 091 97	357, 187 83	233, 085 44	.....
552 84	72, 529 23	39, 928 55	19, 309 83	237, 617 68	420, 938 13	141, 635 20	.....
773 24	55, 077 75	.....	35, 526 74	513, 875 94	772, 553 67	353, 146 29	.....
552 31	114, 208 75	41, 307 98	66, 908 19	492, 045 60	891, 522 83	82, 423 88	.....
139 76	10, 319 10	.....	10, 427 50	136, 724 04	195, 510 40	109, 205 94	.....
180 56	37, 766 19	14, 723 32	59, 105 12	269, 157 43	523, 232 62	170, 211 61	.....
675 16	36, 080 94	3, 314 20	67, 777 67	291, 831 53	562, 479 59	224, 347 25	.....
476 60	19, 079 21	4, 639 83	69, 004 07	369, 347 14	537, 546 85	368, 287 51	.....
393 18	14, 455 40	.....	2, 280 77	154, 845 62	208, 974 97	129, 477 39	.....
399 59	22, 184 47	.....	10, 889 60	158, 662 40	244, 036 06	116, 673 90	.....
121 34	10, 216 40	.....	6, 795 35	299, 475 92	350, 609 01	280, 064 11	.....
693 29	1, 703 53	.....	7 33	156, 644 14	171, 048 29	151, 529 86	.....
991 10	1, 367 25	.....	2, 281 31	114, 275 85	132, 915 51	106, 462 75	.....
193 96	1, 812 05	.....	328 33	81, 492 01	100, 826 35	70, 762 70	.....
523 69	229 28	.....	.....	83, 919 99	90, 672 96	78, 690 04	.....
926 61	1, 181 00	.....	87 88	86, 408 18	98, 603 67	81, 761 38	.....
441 85	3, 335 75	.....	180 00	23, 528 65	40, 496 25	.....	3, 436 18
958 95	5, 561 75	.....	250 00	101, 802 10	125, 572 80	95, 167 16	.....
223 07	.....	.....	.....	.....	223 07	.....	143 41
397 10	111, 068 70	34, 929 55	114, 720 25	.....	268, 115 60	83, 341 40	.....
845 05	4, 036, 668 16	1, 976, 506 41	3, 096, 501 50	15, 050, 049 32	31, 557, 570 44	6, 830, 189 78	2, 406, 071 05
847 14	.....	.....	.....	70, 998 34	55, 424 37	55, 424 37	.....
.....	10, 543 77	4, 288 61	1, 188 73	.....	.....	.....	1, 292, 618 39
397 91	4, 047, 211 93	1, 980, 795 02	3, 097, 690 23	14, 979, 050 98	31, 502, 146 07	6, 774, 765 41	3, 698, 689 44

above statement, viz:

on account of dead-letters	$9, 889 20
on account of fines and penalties	3, 358 01
on account of miscellaneous	14, 109 35
on account of money-order business	190, 770 84
of transportation accrued	331, 781 54
excess of expenditures over receipts	4, 619, 290 08

5, 169, 199 02

J. M. McGREW, Auditor.

No. 4.—*Comparative statement of receipts and expenditures of the Post-Office Depa from July* 1, 1836, *to June* 30, 1876.

Year.	Receipts.			Expend
	Revenue.	Treasury grants.	Total.	
1837	$4, 945, 668 21	.....	$4, 945, 668 21	$3, 288
1838	4, 238, 733 46	.....	4, 238, 733 46	4, 430
1839	4, 484, 656 70	.....	4, 484, 656 70	4, 636
1840	4, 543, 521 92	.....	4, 543, 521 92	4, 718
1841	4, 407, 726 27	$482, 657 00	4, 890, 383 27	4, 499
1842	4, 546, 849 65	.....	4, 546, 849 65	5, 674
1843	4, 296, 225 43	.....	4, 296, 225 43	4, 374
1844	4, 237, 287 83	.....	4, 237, 287 83	4, 296
1845	4, 289, 841 80	.....	4, 289, 841 80	4, 320
1846	3, 487, 199 35	750, 000 00	4, 237, 199 35	4, 076
1847	3, 880, 309 23	12, 500 00	3, 892, 809 23	3, 979
1848	4, 555, 211 10	125, 000 00	4, 680, 211 10	4, 326
1849	4, 705, 176 28	.....	4, 705, 176 28	4, 479
1850	5, 499, 984 86	.....	5, 499, 984 86	5, 212
1851	6, 410, 604 33	.....	6, 410, 604 33	6, 278
1852	5, 184, 526 84	1, 741, 444 44	6, 925, 971 28	7, 108
1853	5, 240, 724 70	2, 255, 000 00	7, 495, 724 70	7, 982
1854	6, 255, 586 22	2, 736, 748 96	8, 992, 335 18	8, 577
1855	6, 642, 136 13	3, 114, 542 26	9, 756, 678 39	9, 968
1856	6, 920, 821 66	3, 748, 881 56	10, 669, 703 22	10, 405
1857	7, 353, 951 76	4, 528, 004 67	11, 881, 956 43	11, 508
1858	7, 486, 792 86	4, 679, 270 71	12, 166, 063 57	12, 722
1859	7, 968, 484 07	3, 915, 946 49	11, 884, 430 56	11, 458
1860	8, 518, 067 40	11, 154, 167 54	19, 672, 234 94	19, 170
1861	8, 349, 296 40	4, 639, 806 53	12, 989, 102 93	13, 606
1862	8, 299, 820 90	2, 598, 953 71	10, 898, 774 61	11, 125
1863	11, 163, 789 59	1, 007, 848 72	12, 171, 638 31	11, 314
1864	12, 438, 253 78	749, 980 00	13, 188, 233 78	12, 644
1865	14, 556, 158 70	3, 968 46	14, 560, 127 16	13, 694
1866	14, 436, 986 21	.....	14, 386, 986 21	15, 352
1867	15, 297, 026 87	3, 991, 666 67	19, 228, 693 54	19, 235
1868	16, 292, 600 80	5, 696, 525 00	21, 989, 125 80	22, 730
1869	18, 344, 510 72	5, 707, 115 30	24, 051, 626 02	23, 698
1870	19, 772, 220 65	4, 022, 140 85	23, 794, 361 50	23, 998
1871	20, 037, 045 42	4, 126, 200 00	24, 163, 245 42	24, 390
1872	21, 915, 426 37	4, 993, 750 00	26, 909, 176 37	26, 658
1873	22, 996, 741 57	5, 990, 475 00	28, 987, 216 57	29, 084
1874	26, 471, 071 82	5, 922, 433 55	32, 393, 505 37	32, 126
1875	26, 791, 360 59	6, 704, 646 96	33, 496, 007 55	33, 611
1876	28, 634, 197 50	5, 088, 583 03	33, 722, 780 53	33, 263

J. M. McGREW, *Au*

OFFICE OF THE AUDITOR OF THE TREASURY
FOR THE POST-OFFICE DEPARTMENT, *October* 23, 1876.

No. 5.—*Statement in detail of miscellaneous payments made by the Post-Office Depa for the fiscal year ended June* 30, 1876, *exhibiting the sums placed to the credit of postn and others, and charged to "miscellaneous account, First Assistant Postmaster-Gene*

Date.	To whom allowed.	For what object.	A
1876.			
Mar. 30	A. J. Myer	Chief Signal-Officer, U. S. A., for telegraphing on account of special agent Charles Adams, while in charge of the post-office at Prescott, Ariz., in September and October, 1875.	
Apr. 19	Thomas P. Cheney	Assistant superintendent of railway mail-service, for telegrams on account of railway mail-service for the month of March, 1876.	
20	James E. White	Assistant superintendent of railway mail-service, for telegrams on account of railway mail-service for the month of March, 1876.	
20	A. C. Jackson	Assistant superintendent railway mail-service, for telegrams, stationery, and fuel on account of railway mail-service for the month of March, 1876.	
20	J. A. Amerman	Assistant superintendent railway mail-service, for rent, office-furniture, and stationery on account of railway mail-service for the month of March, 1876.	

No. 5.—*Statement of miscellaneous payments by the Post-Office Department, &c.*—Continued.

Date.	To whom allowed.	For what object.	Amount.
1876. Apr. 20	W. L. Hunt	Assistant superintendent railway mail-service, for telegrams, stationery, printing, mounting maps, and official railway-guides on account of railway mail-service for the month of March, 1876.	$38 80
27	Theo. N. Vail	General superintendent of railway mail-service, for telegrams, stationery, and printing on account of railway mail-service for the months of January, February, and April, 1876.	8 90
27	M. V. Bailey	Special agent Post-Office Department, for sundry telegrams.	4 48
May 5	W. L. Hunt	Special agent Post-Office Department, for railway-guides, printing, and telegrams during the month of April, 1876.	35 05
8	R. C. Jackson	Special agent Post-Office Department, for telegrams, fuel, stationery, and printing for the month of April, 1876.	47 70
10	Thomas P. Cheney	Special agent Post-Office Department, for telegrams and stationery for the month of April, 1876.	33 55
10	J. A. Amerman	Superintendent railway mail-service, for rent, telegrams, and stationery for the month of April, 1876.	103 32
16	James E. White	Superintendent railway mail-service, for telegrams for the month of April, 1876.	4 38
29	Warren Choate	For 2 reams of carbon paper furnished for use of the railway mail-service in the month of May; 1876.	18 00
June 5	W. L. Hunt	Special agent Post-Office Department, for telegrams and stationery during the month of May, 1876.	34 79
5	C. Jay French	Special agent Post-Office Department, for telegrams, railway-fare, and cleaning office of superintendent of railway mail-service for months of April and May, 1876.	18 62
6	Thomas P. Cheney	Special agent Post-Office Departmemt, for telegrams, stationery, and printing for the month of May, 1876.	41 50
6	James E. White	Special agent Post-Office Department, for telegrams in month of May, 1876.	3 91
8	M. V. Bailey	Special agent Post-Office Department, for telegrams, repairs of safe, and putting up letter-boxes during the month of May, 1876.	14 76
9	R. C. Jackson	Special agent Post-Office Department, for telegrams, stationery, fuel, railway-fare, and printing during the month of May, 1876.	67 07
10	J. A. Amerman	Superintendent of railway mail-service, for rent of offices, and telegrams during the month of May, 1876.	50 00
July 8	E. M. Whitaker	For stationery furnished for railway mail-service in month of June, 1876.	887 50
8	W. L. Hunt	Special agent Post-Office Department, for mounting map, telegrams, official railway-guides, and stationery for the month of June, 1876.	192 60
8	Theo. N. Vail	General superintendent of railway mail-service, for printing, stationery, and skeleton maps for month of June, 1876.	180 00
8	L. M. Terrell	Superintendent of railway mail-service, for telegrams, railway-fare, printing, and stationery for the month of June, 1876.	79 40
10	J. A. Amerman	Superintendent of railway mail-service, for office-rent, telegrams, and stationery for the months of May and June, 1876.	352 02
10	Theo. N. Vail	General superintendent railway mail-service, for telegrams and printing for the month of June, 1876.	6 90
12	R. C. Jackson	Special agent Post-Office Department, for drawing in reducing to scale plan for postal-car, telegrams, and stationery, printing, and lettering mail-box, for the month of June, 1876.	341 24
17	L. M. Terrell	Special agent Post-Office Department, for telegrams, cleaning and care of office, and stationery, for the month of June, 1876.	66 06
19	James E. White	Special agent Post-Office Department, for telegrams, railroad-fare, and stationery, for the month of June, 1876.	85 16
26	Thomas P. Cheney	Assistant superintendent railway mail-service, for telegrams and stationery for the month of June, 1876.	24 53
Sept. 16	Union Pacific Railroad Co	For transmission of telegraphic dispatches during the year 1875.	75 86

No. 5.—*Amounts paid by the Department on drafts, First Asst. P. M. Gen'l., miscellane*

Date.	To whom allowed.	For what object.	Amo
1876.			
April 20	William B. Thompson	Assistant superintendent railway mail-service, for telegrams, stationery, map-bracket, and spring fixtures, on account of railway mail-service.	$
May 10	William B. Thompson	Special agent Post-Office Department, for telegrams and stationery in the month of April, 1876.	
12	C. Jay French	Special agent Post-Office Department, for telegrams and printing, for months of February, March, and April, 1876.	
15	L. M. Terrell	Special agent Post-Office Department, for telegrams for month of March, 1876.	
21	William B. Thompson	Assistant superintendent railway mail-service, for telegrams, stationery, office-key, and moving goods belonging to the fast mail, for month of May, 1876.	1
July 8	William B. Thompson	Special agent Post-Office Department, for telegrams, hardware, stationery, printing, and lumber, for the month of June, 1876.	1
15	C. J. French	Special agent Post-Office Department, for telegrams, stationery, gas-bill, railroad-fare, and printing, for month of June, 1876.	

Amounts credited postmasters on their general accounts, First Asst. P. M. Gen'l., miscellan

1875.			
Nov. 30	Lillie Fisk	Postmaster at Galena, Mo., for traveling-expenses per order.	
Dec. 4	J. C. Douglass	Postmaster at Zanesville, Ohio, for stationery, 3d quarter 1875.	
17	S. P. Gambia	Postmaster at San Antonio, Tex., for safe.	5
1876.			
Feb. 2	Leander Colt	Postmaster at Suspension Bridge, N. Y., 3d and 4th quarters 1875, and 1st quarter 1876, for miscellaneous items.	
10	J. C. Whittlesey	Late postmaster at Houston, Tex., for amount paid for removal of office-furniture and boxes from Galveston to Houston.	
16	John L. Miller	For balance on dating-stamp, 3d quarter 1875.	
March 2	Leslie Bassett	Postmaster at Richland, Iowa, for hire of team.	
16	J. W. Rich	Postmaster at Vinton, Iowa, for mailing-table and stamping-pad.	
16	J. S. Adams	Postmaster at Jacksonville, Fla., for miscellaneous expense, 3d quarter 1875.	
23	James E. Dunham	Postmaster at Bridgeport, Conn., miscellaneous expense, 4th quarter 1875.	
31	William L. Burt	Late postmaster at Boston, Mass., for letter-slips, 4th quarter 1875.	1
May 8	Lucy J. Fowler	Postmaster at Cedar Keys, Fla., for fire-proof safe.	4
17	J. W. Bissell	Postmaster at Duncansby, Miss., for recovery of property of post-office at Holland's Landing, Miss.	
July 3	Thomas L. James	Postmaster at New York City, for expenses incurred in fitting up rooms for the use of the department.	3
Aug. 19	J. L. Crane	Postmaster at Springfield, Ill., for city directory.	
28	William Jackson	Late postmaster at Rock Island, Ill., for printing, 1st quarter 1876.	

No. 5.—*Amounts allowed to the postmasters at the principal offices of the United States, incidental expenses of such offices actually and necessarily incurred, such as office-rep gas-fixtures, telegraphing, and other miscellaneous expenses, and charged to miscellan account, First Assistant Postmaster-General.*

Third quarter, 1875		$18, 9
Fourth quarter, 1875		17, 9
First quarter, 1876		12, 6
Second quarter, 1876		22, 1
Total		71, 0
Amount paid to postmasters and others		1, 6
Amount paid by warrants		3, 1
Amount paid by drafts		6
Total		76, 4
Deduct amounts charged to postmasters for overcredits	$385 00	
Deduct amount of fares charged to inland transportation	39 94	
		4
Amount actually paid, and charged to miscellaneous account		76, 02

No. 5.—*Statement in detail of miscellaneous payments on warrants, made by the Post-Office Department for the fiscal year ended June 30, 1876, and charged to miscellaneous account, Third Assistant Postmaster-General.*

Date.	To whom allowed.	For what object.	Amount.
1875. Dec. 10	W. & J. Sloane	For carpet furnished for the office of the stamp-agent at New York, in the month of October, 1875.	$68 72
10	G. Ebbinghousen & Co	For furniture furnished for the office of the stamp-agent at New York, in the month of November, 1875.	245 00
1876. Feb. 11	George G. Pride	Stamp-agent, for traveling-expenses from New York to Washington and return, on business connected with postage-stamp agency at New York, January 24 and 26, 1876.	34 50
Feb. 17	A. D. Hazen	Chief of stamp-division, Post-Office Department, for expenses incurred in going to New York and Philadelphia, on business for the Post-Office Department, in February, 1876.	37 25
Mar. 29	Mohun Brothers	For 10 yards of roll drawing-paper, furnished to the Post-Office Department in the month of March, 1876.	5 00
May 19	E. H. Purdy & Co	For frames, glass, boxes, easels, packing, and fitting up for the Post-Office Department in the month of May, 1876.	390 40
July 1	A. D. Hazen	Chief of stamp-division, Post-Office Department, for personal expenses incurred during sundry trips on official business to Philadelphia and New York, from February 21 to May 28, 1876.	241 75
8	Continental Bank Note Co	For mounting and framing postage-stamps for display at the Centennial Exhibition at Philadelphia.	250 00
Aug. 17	George G. Pride	Stamp-agent, for expenses incurred in traveling from New York to Washington on official business, April 4 to 7 and May 22 to 25, 1876.	67 80
1875. Oct. 13	A. D. Hazen	Chief of stamp-division, for expenses to New York and Springfield, Mass., on official business.	69 58

No. 5.—*Amounts paid by the Department on drafts and charged to miscellaneous account.*

Date.	To whom allowed.	For what object.	Amount.
1876. Jan. 26	P. Jewel & Sons	For 40 pounds of lap-splits, furnished for the use of the postal-card agency at Springfield, Mass.	$4 00
Mar. 10	M. S. Perry	For expenses to and from New York on business for the Post-Office Department.	20 75
24	Howell, Firm & Co	For mounting sample stamped envelopes for exhibition at the Centennial.	2 50
May 12	E. W. Barber	Third Assistant Postmaster-General, for expenses incurred from May 1 to May 6, 1875, inclusive, in making arrangements for the manufacture of Centennial stamped envelopes.	45 00
June 7	H. T. Sperry	For expenses at Philadelphia and Washington, on Post-Office Department business, during the month of May, 1876.	38 75
July 15	George N. Tyner	Postal-card agent, for expenses incurred while traveling on official business for the Post-Office Department from June 2 to June 6, 1876.	51 50
		Amount credited on general account.	
1875. Nov. 9	Thomas B. Van Buren	United States consul and mail-agent at Yokohama, Japan, for miscellaneous expenses.	48 01
	Total miscellaneous,	Third Assistant Postmaster-General	1,620 51

J. M. McGREW, *Auditor.*

OFFICE OF THE AUDITOR OF THE TREASURY
FOR THE POST-OFFICE DEPARTMENT, *October* 23, 1876.

No. 6.—*Statement showing the transactions of the Money-Order Office of the United States during the fiscal year ended June* 30, 1876.

States and Territories.	Domestic.							International.					
								Canadian.			British.		
	Balance from last year.	Number of orders issued.	Amount of orders issued.	Fees.	Premium.	Drafts and deposits received from postmasters.	Transferred from postage fund.	Number of orders.	Amount of orders.	Fees.	Number of orders.	Amount of orders.	Fees.
Alabama	$18,401 55	69,637	$1,196,516 67	$9,474 95	$304 15	$754,856 88	$3,216 70	19	$650 60	$15 10	77	$1,557 75	$44 75
Arizona Ter	11,417 62	5,706	200,442 53	1,130 40	.....	1,000 00	610 00	4	175 00	3 60	43	1,564 70	40 75
Arkansas	14,636 02	51,315	1,239,723 39	8,210 25	197 21	565,586 00	711 00	4	40 00	1 20	45	1,209 97	33 90
California	25,654 73	117,350	2,050,924 86	13,838 50	.....	1,515,149 00	4,588 53	497	13,627 48	305 20	2,633	51,472 73	1,558 40
Colorado	13,603 65	35,773	670,543 89	5,002 00	.....	367,309 00	3,060 35	28	667 61	15 00	1,968	47,248 85	1,295 25
Connecticut	9,697 53	78,832	1,119,578 25	9,861 70	.....	366,939 00	15,657 28	238	5,122 54	117 00	2,146	32,625 79	1,048 00
Dakota Ter	1,222 85	10,539	206,591 86	1,518 80	.....	5,400 00	287 00	10	234 14	5 20	11	209 41	6 25
Delaware	1,784 93	11,390	166,027 53	1,444 65	.....	6,465 00	6,687 04	10	228 64	5 20	130	2,263 54	71 25
District of Columbia	14,027 18	30,491	557,338 89	4,155 00	.....	1,280,876 80	.....	93	1,929 13	46 00	508	8,840 72	270 75
Florida	25,654 64	39,695	931,726 58	6,213 00	.....	179,739 00	3,309 88	90	3,862 99	78 40	148	5,085 34	134 75
Georgia	50,016 59	79,510	1,249,405 40	10,384 90	3 72	1,048,756 14	2,914 65	103	2,715 92	58 40	246	6,193 41	169 50
Idaho Ter	3,432 63	5,619	187,697 47	1,078 85	.....	66,692 00	437 00	1	5 00	20	128	3,713 85	104 00
Illinois	84,771 26	528,240	7,083,293 47	65,099 45	.....	6,698,382 00	43,665 92	495	9,474 84	221 95	3,584	59,022 79	1,830 00
Indiana	40,198 96	246,465	3,211,316 45	30,036 90	111 06	1,122,493 77	31,066 27	68	1,053 24	26 00	801	13,526 54	405 25
Indian Ter	181 27	813	20,859 89	133 70	.....	.....	.....	.....	.....	.....	.....	.....	.....
Iowa	57,371 06	333,493	4,588,157 87	41,657 85	.....	1,773,633 80	13,049 49	66	1,440 32	33 20	591	9,003 42	282 60
Kansas	23,133 27	141,435	2,219,735 81	18,605 90	.....	780,412 70	6,526 48	23	601 77	13 40	286	5,746 16	163 50
Kentucky	13,803 15	83,914	1,247,455 06	10,796 15	.....	849,389 00	7,681 58	44	946 72	21 60	340	6,427 63	192 25
Louisiana	47,142 02	50,022	1,143,688 53	7,695 15	.....	1,750,218 00	425 00	62	1,985 02	42 20	290	6,761 64	185 50
Maine	20,312 11	76,956	1,339,578 50	10,390 60	67	507,408 00	8,595 44	219	4,473 74	103 90	1,150	33,298 72	896 85
Maryland	12,607 68	58,791	932,325 14	7,683 80	.....	1,237,236 00	4,373 87	60	1,413 39	31 80	621	9,812 17	306 85
Massachusetts	24,709 06	177,195	2,837,671 65	23,146 40	.....	1,865,314 30	57,398 85	1,836	40,233 98	921 20	6,411	105,575 15	3,297 95
Michigan	50,511 34	259,011	3,663,952 15	34,301 85	.....	1,712,817 00	13,057 21	775	15,008 13	347 80	2,686	46,396 44	1,387 00
Minnesota	26,297 16	118,588	1,747,639 90	15,172 20	.....	837,174 82	889 02	45	874 72	20 60	242	4,223 67	125 75

New Mexico Ter	5,236 36	7,985	216,943 45	1,359 00	.....	104,723 37	.....	3	21 50	60	4	69 75	9 00
New York	108,407 10	387,720	5,764,220 12	49,582 60	170 04	15,937,011 06	111,105 35	1,877	38,047 54	879 90	14,030	235,128 96	7,505 50
North Carolina	20,812 88	82,395	1,019,208 31	11,942 55	.....	243,959 00	4,035 47	16	470 40	10 40	78	2,048 45	56 25
Ohio	49,403 24	377,399	4,867,034 93	45,920 65	.....	2,985,090 23	101,673 68	354	6,101 48	145 40	2,678	43,117 48	1,350 50
Oregon	16,232 05	20,172	393,841 28	2,970 15	.....	343,351 00	1,529 00	28	697 24	16 20	262	8,158 49	219 00
Pennsylvania	43,894 40	274,763	3,742,324 13	33,890 30	114 89	2,716,464 70	51,202 24	535	11,304 69	257 70	6,003	91,673 81	2,900 10
Rhode Island	2,880 11	25,910	416,822 97	3,392 95	.....	84,259 00	575 00	139	2,899 65	66 20	1,474	25,890 53	803 25
South Carolina	14,311 64	53,255	929,753 32	7,311 50	.....	515,199 00	1,456 52	20	636 51	13 40	36	651 64	19 50
Tennessee	31,744 29	99,319	1,832,191 71	14,008 35	.....	1,619,316 80	4,164 61	21	456 75	10 60	228	4,252 20	128 25
Texas	69,407 32	122,050	2,551,361 97	18,184 15	28 35	1,488,401 04	18,025 95	37	840 73	19 85	415	10,504 89	288 50
Utah Ter	4,099 14	10,264	241,543 62	1,608 20	.....	120,294 02	496 85	8	313 00	6 40	507	7,635 75	236 75
Vermont	11,027 17	52,760	732,883 24	6,594 95	.....	102,892 00	8,345 96	76	1,041 80	27 20	351	5,574 45	175 25
Virginia	20,515 46	78,847	1,253,309 24	10,376 80	.....	1,444,798 00	5,881 77	24	532 48	12 25	608	13,765 04	388 00
Washington Ter	3,785 73	9,311	254,696 97	1,603 00	.....	3,242 00	.....	39	1,250 50	27 20	79	2,199 40	59 00
West Virginia	6,853 19	28,693	418,562 81	3,665 95	.....	62,635 00	3,396 00	3	77 03	2 20	166	3,147 39	94 50
Wisconsin	56,852 94	236,568	3,641,834 66	30,783 05	.....	2,144,688 00	9,510 13	236	5,343 62	121 40	838	12,647 35	396 00
Wyoming Ter	3,802 39	10,964	256,452 64	1,703 45	.....	.....	1,246 00	7	155 00	3 20	49	923 90	26 25
Total	1,258,979 16	4,998,600	77,035,972 78	645,699 40	1,322 12	61,088,565 82	606,692 19	8,695	186,995 74	4,284 85	59,083	1,018,355 15	31,256 10

No. 6.—*Statement showing the transactions of the Money-Order Office of the United States during the fiscal year ended June 30, 1876*—Continued.

States and Territories.	International—Continued.						Balance due postmasters.	Domestic.				
	German.			Swiss.								
	Number of orders.	Amount of orders.	Fees.	Number of orders.	Amount of orders.	Fees.		Number of orders paid.	Amount of orders paid.	Amount of orders repaid.	Transferred to postage fund.	Deposits.
Alabama	240	$6,914 20	$182 30	2	$25 00	$0 75	$188 08	31,519	$594,975 31	$7,031 65	$3,010 00	$1,362,283 04
Arizona	5	200 00	5 25	.....	.....	.....	.....	1,250	47,714 41	1,427 95	.....	149,720 00
Arkansas	77	1,515 90	41 20	.....	.....	.....	37 01	19,600	518,630 13	6,930 98	116,519 00	1,158,503 66
California	2,086	54,846 31	1,500 70	92	2,291 60	66 25	31 37	55,848	1,453,126 92	12,826 28	78 65	2,195,915 00
Colorado	123	2,989 00	82 40	6	235 50	6 25	22 00	20,903	496,466 59	5,644 56	550 00	590,318 00
Connecticut	556	9,622 87	269 45	39	978 00	26 50	51 96	68,476	1,077,540 39	5,695 24	35 84	455,709 02
Dakota	21	334 50	9 75	.....	.....	.....	9 35	3,133	72,113 93	1,352 73	.....	135,925 80
Delaware	30	810 14	22 40	2	50 00	1 25	4 62	7,749	133,738 01	844 35	15 04	46,913 00
District of Columbia	434	10,502 93	283 30	99	2,302 02	64 00	.....	37,422	609,276 96	3,969 12	.....	1,239,583 00
Florida	55	1,322 50	34 65	3	116 00	3 00	58 57	15,837	397,332 58	5,582 38	2,100 00	725,480 71
Georgia	367	11,497 57	302 95	22	803 40	20 75	6 40	64,598	1,144,007 06	7,796 10	.....	1,175,843 40
Idaho	30	1,290 25	32 90	.....	.....	.....	.....	796	28,728 68	270 88	175,641 00	55,565 00
Illinois	3,774	69,481 41	1,918 35	424	9,518 82	266 25	692 26	674,088	8,855,183 77	45,463 41	1,694 76	4,976,521 74
Indiana	842	13,770 88	383 40	59	1,479 35	40 25	1,450 52	148,800	2,313,189 23	18,449 28	17,668 08	2,047,199 37
Indian Ter	.....	.....	.....	.....	.....	.....	.....	85	2,068 89	60 80	.....	18,975 00
Iowa	676	12,216 97	339 30	41	763 50	22 25	278 47	188,136	3,327,616 02	27,378 01	232 45	3,019,558 00
Kansas	111	2,290 24	62 45	4	115 00	3 25	51 41	95,386	1,805,653 19	15,011 77	225 43	1,177,385 34
Kentucky	430	10,522 82	284 15	26	803 95	21 50	103 33	82,025	1,477,571 38	7,552 65	30 90	624,585 18
Louisiana	292	6,390 73	174 55	19	440 00	12 25	.....	51,058	1,274,035 20	5,910 62	25 00	1,621,169 00
Maine	109	3,129 86	82 65	21	838 00	21 25	164 93	65,593	1,178,989 91	6,507 35	1,350 00	705,345 00
Maryland	1,208	26,096 37	700 75	9	216 25	6 25	25 42	94,939	1,856,934 63	5,067 81	.....	335,508 10
Massachusetts	1,123	24,102 02	662 30	75	1,295 11	38 25	175 28	311,863	4,019,756 69	16,397 55	2,080 35	811,606 10
Michigan	1,199	20,471 50	569 20	98	1,110 86	37 50	193 65	197,520	2,930,779 34	22,310 19	1,684 00	2,480,812 00
Minnesota	405	6,230 69	175 15	28	645 65	18 50	212 66	77,717	1,206,700 80	11,522 61	850 68	1,345,210 82
Mississippi	24	691 50	18 15	8	163 00	5 25	22 54	26,732	466,372 30	11,437 45	67 54	1,239,660 03
Missouri	1,053	23,861 90	643 80	84	2,568 66	69 25	203 12	277,816	5,125,651 37	18,932 39	2,001 68	2,394,768 56
Montana	44	1,223 00	32 05	.....	.....	.....	.....	2,312	60,741 90	1,068 90	.....	217,682 00
Nebraska	159	2,926 50	78 85	3	84 75	2 25	28 78	38,589	809,573 96	6,827 82	188 66	1,203,876 00
Nevada	150	5,238 62	138 65	8	120 65	3 50	.....	2,337	75,286 01	2,664 81	.....	334,483 00
New Hampshire	92	1,619 34	45 70	4	69 25	1 00	96 95	35,496	582,183 97	3,358 72	93 54	310,363 74
New Jersey	1,425	26,795 18	739 95	43	900 95	20 00	168 04	58,590	958,406 00	5,956 65	211 00	

235,204 [illegible]

South Carolina	63	1,829 00	48 85	1	33 00	1 00	.....	28,277	506,771 36	4,789 49	73 99	939,381 00
Tennessee	166	4,186 53	111 60	60	1,281 55	36 25	40 18	84,740	1,617,744 75	10,256 61	728 29	1,839,116 00
Texas	739	18,035 10	482 80	10	113 42	4 00	68 76	60,226	1,468,227 73	16,309 05	5,435 53	2,582,843 37
Utah	53	1,674 25	44 00	20	718 00	18 50	1 47	5,781	153,407 46	1,282 87	.....	206,420 02
Vermont	17	713 80	18 00	.....	.....	.....	103 59	34,192	575,093 77	3,492 38	1,466 00	273,933 63
Virginia	277	7,295 05	197 65	20	708 70	18 50	.....	63,408	1,121,144 20	6,156 10	13 41	1,594,250 00
Washington	47	958 25	27 00	.....	.....	.....	.....	2,646	89,537 99	1,596 51	.....	170,559 00
West Virginia	83	1,318 71	37 70	1	9 90	25	114 93	14,392	256,822 66	2,413 06	311 80	229,546 00
Wisconsin	1,546	23,347 44	659 55	102	1,661 45	49 50	279 21	159,546	2,835,217 19	21,427 55	873 48	2,929,956 00
Wyoming	9	245 75	7 00	.....	.....	.....	.....	9,689	119,556 64	1,832 56	.....	137,383 00
Total	38,174	780,060 52	21,448 10	3,457	83,256 62	2,347 25	6,740 97	4,947,593	76,632,571 45	473,767 40	524,589 68	62,071,210 02

No. 6.—*Statement showing the transactions of the Money-Order Office of the United States during the fiscal year ended June* 30, 1876—Continued.

States and Territories.	International.												Total.			
	Canadian.			British.			German.			Swiss.						
	Number of orders paid.	Amount of orders paid.	Amount of orders repaid.	Number of orders paid.	Amount of orders paid.	Amount of orders repaid.	Number of orders paid.	Amount of orders paid.	Amount of orders repaid.	Number of orders paid.	Amount of orders paid.	Amount of orders repaid.	Expenses.	Commissions and clerk-hire.	Balance due the United States.	Miscellaneous items.
Alabama	9	$327 85	.....	35	$759 18	.....	51	$1,303 25	$10 00	.....	.....	.....	$596 28	$5,121 65	$16,867 75	$63 47
Arizona	.....	.....	.....	1	11 06	.....	14	395 50	.....	.....	.....	.....	.....	501 93	16,819 00	.....
Arkansas	8	235 83	.....	17	338 45	.....	53	1,585 67	10 00	5	$120 54	.....	1,721 49	3,663 66	23,679 48	4 16
California	367	11,000 79	.....	490	10,076 34	$75 50	678	17,916 14	224 50	37	865 73	$30 00	132 47	10,507 44	22,991 74	88 16
Colorado	33	1,030 77	.....	147	3,145 08	12 00	65	1,798 98	.....	4	130 74	.....	116 08	3,028 10	9,783 27	56 58
Connecticut	213	2,861 63	.....	397	7,140 99	96 50	339	8,823 25	112 00	20	433 66	.....	422 14	5,796 24	6,906 60	22 37
Dakota	5	117 71	.....	12	240 88	5 00	59	1,487 20	26 25	.....	.....	.....	12 50	693 09	3,755 88	98 14
Delaware	8	260 83	.....	47	749 97	.....	14	304 70	.....	6	227 86	.....	2 45	828 02	1,981 96	.....
District of Columbia	56	865 78	.....	100	1,739 99	20 00	120	3,034 98	21 00	16	354 33	.....	7,105 68	4,448 99	10,216 89	.....
Florida	18	465 52	$67 00	31	725 10	.....	10	239 00	25 00	2	66 94	10 00	627 22	2,997 50	21,618 52	1 83
Georgia	12	308 40	.....	58	1,239 33	.....	60	1,478 04	10 00	2	67 67	.....	98 60	6,009 32	46,272 57	119 21
Idaho	5	169 60	.....	12	305 42	20 00	.....	.....	.....	.....	.....	.....	18 95	446 07	3,313 15	5 40
Illinois	522	11,662 90	33 50	1,553	32,911 80	139 36	3,032	77,422 40	268 78	121	3,018 99	36 07	3,275 64	47,949 36	71,916 26	140 03
Indiana	120	2,531 14	20 00	272	5,765 09	245 75	580	14,649 95	147 00	30	867 64	.....	464 69	15,296 51	30,703 83	161 28
Indian Ter	.....	.....	.....	.....	.....	.....	.....	.....	.....	.....	.....	.....	.....	49 73	20 44	.....
Iowa	127	3,527 72	24 00	358	7,539 29	57 00	1,217	32,650 25	61 35	74	2,230 62	.....	107 35	20,927 18	56,172 10	168 76
Kansas	126	3,311 14	.....	274	7,643 76	.....	309	8,274 14	.....	13	319 52	.....	127 60	10,784 66	28,379 71	345 18
Kentucky	28	553 44	.....	106	2,073 93	31 60	307	7,949 25	.....	26	705 39	.....	258 25	7,779 67	10,313 09	44 16
Louisiana	14	480 27	50 00	113	2,301 79	.....	340	8,496 66	5 00	20	499 59	.....	511 85	5,395 92	46,088 34	191 35
Maine	557	12,085 38	.....	176	3,579 43	5 50	9	285 15	.....	3	61 38	.....	125 60	6,951 63	13,921 91	86 98
Maryland	62	881 42	26 30	211	3,541 71	66 00	542	12,991 52	170 50	17	494 57	.....	60	7,372 92	9,775 00	4 66
Massachusetts	2,157	48,418 45	246 62	2,070	35,431 26	197 67	402	10,105 79	231 25	30	666 75	.....	312 49	20,333 24	18,543 79	174 10
Michigan	760	18,097 43	168 07	529	10,478 96	235 68	1,101	28,865 68	151 91	50	1,328 54	9 71	165 74	18,139 58	44,641 00	293 80
Minnesota	133	3,869 53	.....	172	3,535 71	10 00	1,179	32,360 56	170 65	10	226 85	.....	95 30	7,008 89	27,207 98	1 78

New Mexico	2	91 00	.....	.....	.....	.....	2	87 10	.....	.....	.....	.....	.....	.....	585 00	6,290 77	30 73
New York	3,894	50,898 30	525 40	5,834	95,150 03	732 80	7,312	170,332 84	773 50	359	8,210 30	55 18	5,608 80	85,760 73	188,630 05	205 18
North Carolina	11	201 23	.....	49	991 60	.....	23	544 78	.....	4	72 86	.....	2,642 00	5,741 81	22,764 07	107 64
Ohio	434	8,052 17	24 50	1,121	21,850 42	68 95	1,718	44,670 18	251 25	143	3,097 05	10 00	302 26	31,056 85	42,546 62	451 90
Oregon	132	4,943 94	.....	15	354 20	.....	72	1,990 11	.....	13	356 00	.....	29 30	1,990 50	14,625 13	34 23
Pennsylvania	771	13,385 19	56 00	3,031	48,580 62	313 28	2,480	61,518 58	73 80	138	3,653 36	.....	3,633 56	24,211 51	42,494 52	497 93
Rhode Island	67	1,465 58	20 00	283	5,055 05	6 88	77	2,059 71	10 00	2	24 11	.....	8 75	1,067 72	1,450 32	4 04
South Carolina	37	990 13	.....	32	562 97	.....	93	2,471 23	57 00	3	63 88	.....	16 80	3,572 97	12,516 06	.....
Tennessee	14	352 97	.....	99	2,231 14	20 00	90	2,084 90	10 50	37	1,119 00	.....	47 27	8,557 03	29,624 05	37 16
Texas	33	754 01	50 00	140	3,004 81	.....	565	15,503 07	135 00	16	484 74	.....	636 55	8,406 50	73,969 56	6 91
Utah	5	119 86	.....	279	4,194 23	55 00	44	1,394 22	80 00	3	52 50	.....	505 41	971 76	10,200 49	6 13
Vermont	88	2,062 58	30 75	46	874 91	5 49	1	11 25	.....	2	66 57	.....	12 00	3,665 57	8,563 34	119 17
Virginia	24	447 52	.....	198	4,107 28	.....	107	2,584 33	.....	8	202 61	.....	121 91	6,654 46	22,095 60	21 52
Washington	28	639 82	10 00	7	121 15	33 20	41	1,062 71	.....	.....	.....	.....	6 50	773 60	3,508 57	.....
West Virginia	5	102 62	.....	47	994 90	.....	41	837 39	43 00	22	498 46	.....	219 52	1,579 86	6,497 85	48 44
Wisconsin	159	4,916 93	20 00	363	7,775 29	128 00	2,305	62,356 49	248 35	96	2,411 71	34 83	128 26	16,916 03	45,554 61	209 58
Wyoming	150	1,502 01	.....	11	145 63	.....	7	145 45	.....	.....	.....	.....	.....	875 35	3,124 94	.....
Total	11,783	232,625 57	1,447 14	20,586	372,288 63	2,797 42	28,879	729,672 66	3,691 38	1,493	38,394 29	209 79	33,067 52	457,940 23	1,192,536 80	5,166 79

J. M. McGREW, *Auditor.*

OFFICE OF THE AUDITOR OF THE TREASURY
FOR THE POST-OFFICE DEPARTMENT,
Washington, D. C., October 23, 1876.

No. 7.—*Statement of the receipts and disbursements of the Money-Order Office of the Un States for the fiscal year ended June* 30, 1876.

RECEIPTS.

Balance in the hands of postmasters June 30, 1875		$1,258,979
Amount received for domestic money-orders issued	$77,035,972 78	
Amount received for Canadian international money-orders issued	186,995 74	
Amount received for British international money-orders issued	1,018,355 15	
Amount received for German international money-orders issued	780,060 52	
Amount received for Swiss international money-orders issued	83,256 62	
Total issued		79,104,640
Amount received for fees on domestic money-orders issued	645,699 40	
Amount received for fees on Canadian international money-orders issued	4,284 85	
Amount received for fees on British international money-orders issued	31,256 10	
Amount received for fees on German international money-orders issued	21,448 10	
Amount received for fees on Swiss international money-orders issued	2,347 25	
Total fees		705,035
Amount received for premiums, &c		1,322
Amount received for deposits and drafts		61,088,565
Amount transferred from postage fund		606,692
Amount due postmasters		6,740
		142,771,976

DISBURSEMENTS.

Amount of domestic money-orders paid		$76,632,571 45	
Amount of Canadian international money-orders paid		232,625 57	
Amount of British international money-orders paid		372,288 63	
Amount of German international money-orders paid		729,672 66	
Amount of Swiss international money-orders paid		38,394 29	
Total paid		78,005,552 60	
Amount of domestic money-orders repaid	$473,767 40		
Amount of Canadian international money-orders repaid	1,447 14		
Amount of British international money-orders repaid	2,797 42		
Amount of German international money-orders repaid	3,691 38		
Amount of Swiss international money-orders repaid	209 79		
Total repaid		481,913 13	
Amount transferred to postage fund		524,589 68	
Amount deposited at first-class offices		62,071,210 02	
Amount paid for incidental expenses		33,067 52	
Amount paid for commissions and clerk-hire		457,940 23	
Miscellaneous items		5,166 79	
Balance in the hands of postmasters June 30, 1876		1,192,536 80	
			142,771,976

J. M. McGREW, *Auditor*

OFFICE OF THE AUDITOR OF THE TREASURY
FOR THE POST-OFFICE DEPARTMENT, *October* 23, 1876.

No. 8.—*Statement showing the revenue which accrued on domestic money-order transactions for the fiscal year ended June* 30, 1876.

Amount received for fees on orders issued		$645,699 40
Premiums, &c., received		1,322 12
		647,021 52
Amount paid for commissions and clerk-hire	$420,487 42	
Incidental expenses	30,800 09	
Lost remittances	4,960 64	
Bad debts	2 53	
Net revenue	190,770 84	
		647,021 52

J. M. McGREW,
Auditor.

OFFICE OF THE AUDITOR OF THE TREASURY
FOR THE POST-OFFICE DEPARTMENT, *October* 23, 1876.

No. 9.—*Statement showing the revenue which accrued on money-order transactions with the United Kingdom of Great Britain and Ireland for the fiscal year ended June* 30, 1875.

Amount of fees received on orders issued		$34,986 25
Amount paid for commissions and clerk-hire	$23,036 12	
Excess of commissions paid United Kingdom	8,350 97	
Cost of exchange over treaty rates on £150,861 0*s.* 2*d.*	2,590 80	
Incidental expenses	174 77	
Net revenue	833 59	
		34,986 25

J. M. McGREW,
Auditor.

OFFICE OF THE AUDITOR OF THE TREASURY
FOR THE POST-OFFICE DEPARTMENT, *October* 23, 1876.

No. 10.—*Statement showing the revenue which accrued on money-order transactions with the German Empire for the fiscal year ended June* 30, 1875.

Amount received for fees on orders issued		$20,498 25
Gain in the purchase of exchange under treaty rates, on thalers 165,300		39 30
		20,537 55
Amount paid for commissions and clerk-hire	$9,814 71	
Excess of commissions paid Germany	2,732 49	
Incidental expenses	173 88	
Net revenue	7,816 47	
		20,537 55

J. M. McGREW,
Auditor.

OFFICE OF THE AUDITOR OF THE TREASURY
FOR THE POST-OFFICE DEPARTMENT, *October* 23, 1876.

No. 11.—*Amount of letter-postage collected on French mails received in and sent from United States during the fiscal year ended June 30, 1876.*

RECEIVED.

Lines.	Unpaid distributed.	Unpaid.	Paid.	Paid distributed.	Tota
Inman line	$1,338 70	$467 25	.....	$9,648 46	$11,45
North-German Lloyd of Bremen	989 55	309 50	.....	6,796 93	8,09
Cunard line	603 09	360 94	.....	5,817 78	6,78
French Steamship Company	581 29	177 47	.....	3,970 43	4,72
Hamburg-American Packet Company	532 11	204 00	.....	4,071 65	4,80
Total	4,044 74	1,519 16	.....	30,305 25	35,86
Amount received	.....	5,563 90	$30,305 25	.....	.....

SENT.

Lines.	Paid.	Paid distributed.	Unpaid.	Tota
Cunard line	$240 84	$6,301 87	$895 95	$7,43
Hamburg-American Packet Company	493 92	4,774 47	1,232 66	6,50
Liverpool and Great Western Steam Company	24 84	5,072 79	999 25	6,09
French Steamship Company	165 24	3,710 99	549 41	4,42
White Star line	136 62	2,158 68	339 12	2,63
Inman line	105 84	1,951 10	398 95	2,45
North-German Lloyd, of Bremen	393 66	1,238 29	156 71	1,78
Anchor line	54	20 61	1 50	2
Total	1,561 50	25,228 80	4,573 55	31,30
Amount sent	26,790 30	.....	4,573 55	.....

Amount collected in the United States	$32,354
Amount collected in France	34,778
Total	67,133
Excess collected in France	2,424
Increase compared with same period last fiscal year	7,603

NOTE.—After France was admitted to the Postal Union, January 1, 1876, the posta was not reported.

J. M. McGREW, *Auditor*

OFFICE OF THE AUDITOR OF THE TREASURY
FOR THE POST-OFFICE DEPARTMENT, *October* 23, 1876.

No. 12.—*Weight of letters and newspapers, &c., sent from the United States to the Uni Kingdom in British mails during the fiscal year ended June* 30, 1876.

Lines.	Letters.	Newspap &c.
	Grams.	*Gran*
Cunard line	15,686,146	63,987,
White Star line	7,965,403	34,363,
Hamburg-American Packet Company	7,097,651	33,931,
Liverpool and Great Western Steam Company	7,493,792	33,007,
North-German Lloyd of Bremen	1,651,709	14,416,
Canadian line	1,820,597	9,185,
Anchor line	889,370	5,533,
American Steamship Company	539,896	3,516,
Inman line	1,114,193	5,071,
Total	44,258,757	203,014
Decrease compared with last fiscal year	5,829,836	1,31

J. M. McGREW, *Audi*

OFFICE OF THE AUDITOR OF THE TREASURY
FOR THE POST-OFFICE DEPARTMENT, *October* 23, 1876.

No. 13.—*Weight of letters and newspapers, &c., sent from the United States to Germany in closed mails through England and France, and by direct steamer, during the fiscal year ended June* 30, 1876.

Lines.	Letters.	Newspapers, &c.
	Grams.	*Grams.*
North-German Lloyd of Bremen	8, 158, 393	29, 121, 761
Hamburg-American Packet Company, direct	7, 193, 179	27, 209, 833
Cunard line, via England	4, 717, 146	12, 277, 297
Liverpool and Great Western Steam Company, via England	3, 946, 734	9, 507, 325
North-German Lloyd of Bremen, via England	1, 554, 394	3, 693, 974
Hamburg-American Packet Company, via England	1, 064, 995	754, 061
White Star line, via England	243, 839	560, 726
Anchor line, via England	132, 365	542, 727
Inman line, via England	58, 732	175, 461
American Steamship Company, via England	15, 250	79, 105
Total	27, 085, 027	83, 922, 270
Compared with last fiscal year: Increase	.....	9, 810, 899
Compared with last fiscal year: Decrease	49, 821	.....

J. M. McGREW, *Auditor.*

OFFICE OF THE AUDITOR OF THE TREASURY
FOR THE POST-OFFICE DEPARTMENT, *October* 23, 1876.

No. 14.—*Number and weight of letters, and weight of newspapers, &c., exchanged between the United States and France, during the fiscal year ended June* 30, 1876.

Lines.	Letters.				Newspapers, &c.	
	Received.		Sent.		Received.	Sent.
	Rates.	*Grams.*	*Rates.*	*Grams.*	*Grams.*	*Grams.*
Inman line	110, 320	812, 992	146, 758	333, 199	2, 023, 755	1, 080, 734
Hamburg-American Packet Company	46, 548	332, 655	71, 300	1, 222, 528	839, 845	4, 274, 431
North German Lloyd of Bremen	78, 560	569, 723	17, 890	336, 746	1, 907, 338	1, 202, 850
Cunard line	66, 954	493, 336	81, 409	1, 793. 886	1, 011, 525	7, 430, 478
French line	35, 630	355, 385	48, 702	1, 047, 358	1, 355, 523	4, 449, 365
American Steamship Company	.....	.....	350	4, 527	.....	18, 205
White Star Line	.....	.....	27, 362	740, 518	.....	2, 667, 975
Liverpool and Great Western Steam Company	.....	.....	67, 667	957, 062	.....	3, 492, 984
Anchor line	.....	.....	247	2, 285	.....	.....
Total	338, 012	2, 564, 091	461, 685	6, 438, 109	7, 197, 986	24, 617, 022
Compared with last fiscal year. Increase	23, 958	213, 354	171, 142	1, 389, 335	572, 442	7, 612, 649

J. M. McGREW, *Auditor.*

OFFICE OF THE AUDITOR OF THE TREASURY
FOR THE POST-OFFICE DEPARTMENT, *October* 23, 1876.

No. 15.—*Weight of letters and newspapers, &c., sent from the United States to Belgiu the fiscal year ended June* 30, 1876.

Lines.	Letters.	Ne
	Grams.	(
Hamburg-American Packet Company	173, 161	
North German Lloyd of Bremen	243, 354	
White Star line	52, 730	
Cunard line	221, 380	
Liverpool and Great Western Steam Company	115, 553	
Inman line	12, 072	
Anchor line	4, 035	
Red Star line	1, 049	....
American Steamship Company	380	
Total	823, 714	
Increase compared with last fiscal year	111, 569	

J. M. McGREW, A

OFFICE OF THE AUDITOR OF THE TREASURY
FOR THE POST-OFFICE DEPARTMENT, *October* 23, 1876.

No. 16.—*Weight of letters and newspapers, &c., sent from the United States to Sici in closed mails, via England and Belgium, and by direct steamer, via Bremen an burg, during the fiscal year ended June* 30, 1876.

Lines.	Letters.	Ne
	Grams.	(
North German Lloyd of Bremen	523, 134	
Hamburg-American Packet Company	391, 785	
Cunard line	437, 284	
Liverpool and Great Western Steam Company	327, 118	
White Star line	46, 265	
Inman line	16, 655	
Anchor line	9, 310	
American Steamship Company	1, 035	
Total	1, 752, 586	
Increase compared with last fiscal year	470, 100	

J. M. McGREW, A

OFFICE OF THE AUDITOR OF THE TREASURY
FOR THE POST-OFFICE DEPARTMENT, *October* 23, 1876.

No. 17.—*Weight of letters and newspapers, &c., sent from the United States to the Ne during the fiscal year ended June* 30, 1876.

Lines.	Letters.	Ne
	Grams.	(
North German Lloyd of Bremen	441, 722	
Cunard line	290, 764	
Hamburg-American Packet Company	243, 361	
Liverpool and Great Western Steam Company	214, 094	
White Star line	52, 280	
Inman line	11, 295	
Anchor line	6, 180	
Netherlands-American Steam Navigation Company	3, 250	
American Steamship Company	380	
Total	1, 263, 326	
Increase compared with last fiscal year	323, 294	

J. M. McGREW, A

OFFICE OF THE AUDITOR OF THE TREASURY
FOR THE POST-OFFICE DEPARTMENT, October 23, 1876.

No. 18.—*Weight of letters and newspapers, &c., sent from the United States to Denmark during the fiscal year ended June* 30, 1876.

Lines.	Letters.	Newspapers, &c.
	Grams.	*Grams.*
Hamburg-American Packet Company	779, 200	1, 417, 994
North-German Lloyd of Bremen	417, 529	802, 268
Anchor line	6, 290	22, 940
White Star line	7, 725	11, 109
Total	1, 210, 744	2, 254, 311
Increase compared with last fiscal year	66, 022	867, 282

J. M. McGREW, *Auditor.*

OFFICE OF THE AUDITOR OF THE TREASURY
FOR THE POST-OFFICE DEPARTMENT, *October* 23, 1876.

No. 19.—*Weight of letters and newspapers, &c., sent from the United States to Italy during the fiscal year ended June* 30, 1876.

Lines.	Letters.	Newspapers, &c.
	Grams.	*Grams.*
North-German Lloyd of Bremen	593, 197	2, 060, 941
Cunard line	506, 927	1, 488, 485
Hamburg-American Packet Company	370, 481	1, 298, 404
Liverpool and Great Western Steam Company	347, 350	899, 148
Inman line	18, 820	42, 129
White Star line	49, 220	189, 740
Anchor line	9, 095	42, 469
American Steamship Company	1, 220	4, 077
Total	1, 896, 310	6, 025, 393
Increase compared with last fiscal year	232, 033	715, 322

J. M. McGREW, *Auditor.*,

OFFICE OF THE AUDITOR OF THE TREASURY
FOR THE POST OFFICE DEPARTMENT, *October* 23, 1876.

No. 20.—*Weight of letters and newspapers, &c., sent from the United States to Sweden during the fiscal year ended June* 30, 1876.

Lines.	Letters.	Newspapers, &c.
	Grams.	*Grams.*
Hamburg-American Packet Company	1, 548, 139	2, 216, 688
North German Lloyd of Bremen	865, 180	1, 262, 250
Anchor line	11, 000	27, 675
White Star line	12, 825	12, 394
Total	2, 437, 144	3, 519, 907
Increase compared with last fiscal year	345, 010	1, 052, 323

J. M. McGREW, *Auditor.*

OFFICE OF THE AUDITOR OF THE TREASURY
FOR THE POST-OFFICE DEPARTMENT, *October* 23, 1876.

No. 21.—*Weight of letters and newspapers, &c., sent from the United States to Norway durin the fiscal year ended June* 30, 1876.

Lines.	Letters.	Newspaper &c.
	Grams.	*Grams.*
Hamburg-American Packet Company	1,145,519	2,151,
White Star line	12,120	11,
North-German Lloyd of Bremen	696,271	716,
Anchor line	12,090	11,
Total	1,866,000	2,890,
Increase compared with last fiscal year	409,514	1,178,

J. M. McGREW, *Auditor*

OFFICE OF THE AUDITOR OF THE TREASURY
FOR THE POST-OFFICE DEPARTMENT, *October* 23, 1876.

No. 22.—*Statement of letters and newspapers, with the several postages, received in and sen from the United States to Ecuador during the fiscal year ended June* 30, 1876.

Pacific Mail Steamship Company.	Letters.	Newspapers, &c.	Postages on letters.
Received	637	129	$127 4
Sent	3,074	5,950	826 0
Total	3,711	6,079	953 4
Add newspaper postages, at two cents each			121 5
Total postages			1,075 0
Decrease compared with last fiscal year	3,124	2,500	463 5

J. M. McGREW, *Auditor.*

OFFICE OF THE AUDITOR OF THE TREASURY
FOR THE POST-OFFICE DEPARTMENT, *October* 23, 1876.

No. 23.—*Statement of letters and newspapers, with the several postages, received in and sen from the United States to Venezuela during the fiscal year ended June* 30, 1876.

Pim, Forwood & Co.'s Line.	Letters.	Newspapers, &c.	Postages on letters.
Received	2,340	1,188	$70
Sent	2,083	2,964	154
Total	4,423	4,152	224
Add newspaper postages, at two cents each			83
Total postages			307
Compared with last fiscal year { Increase		1,190	
Compared with last fiscal year { Decrease	1,519		140

J. M. McGREW, *Audito*

OFFICE OF THE AUDITOR OF THE TREASURY
FOR THE POST-OFFICE DEPARTMENT, *October* 23, 1876.

No. 24.—*Statement of letters and newspapers, with the several postages, received in and sent from the United States to New Granada during the fiscal year ended June 30, 1876.*

Pim, Forwood & Co.'s Line.	Letters.	Newspapers, &c.	Postages on letters.
Received	5,742	1,376	$287 10
Sent	11,958	12,524	597 90
Total	17,700	13,900	885 00
Add newspaper postages, at two cents each			278 00
Total postages			1,163 00
Decrease compared with last fiscal year	2,173	387	1,118 18

J. M. McGREW, *Auditor.*

OFFICE OF THE AUDITOR OF THE TREASURY
FOR THE POST-OFFICE DEPARTMENT, *October* 23, 1876.

No. 25.—*Statement of letters and newspapers, with the several postages, received in and sent from the United States to Panama and Colon during the fiscal year ended June 30, 1876.*

Pacific Mail-Steamship Company, and other steamers.	Letters.	Newspapers, &c.	Postages on letters.
Received	113,244	64,686	$8,573 30
Sent	96,055	167,307	10,917 46
Total	209,299	231,993	19,490 76
Add newspaper postages, at two cents each			4,639 86
Total postages			24,130 62
Decrease compared with last fiscal year	11,041	18,378	9,230 73

J. M. McGREW, *Auditor.*

OFFICE OF THE AUDITOR OF THE TREASURY
FOR THE POST-OFFICE DEPARTMENT, *October* 23, 1876.

No. 26.—*Statement of letters and newspapers, with the several postages, received in and sent from the United States to Mexico during the fiscal year ended June 30, 1876.*

United States and Mexican Steamship Company.	Letters.	Newspapers, &c.	Postages on letters.
Received	38,042	29,903	$1,403 22
Sent	46,182	56,552	4,353 45
Total	84,224	86,455	5,756 67
Add newspaper postages, at two cents each			1,729 10
Total postages			7,485 77
Increase compared with last fiscal year	15,788	23,299	1,180 93

J. M. McGREW, *Auditor.*

OFFICE OF THE AUDITOR OF THE TREASURY
FOR THE POST-OFFICE DEPARTMENT, *October* 23, 1876.

No. 27.—*Statement of letters and newspapers, with the several postages, received in and sent from the United States to Brazil during the fiscal year ended June 30, 1876.*

	Letters.	Newspapers, &c.	Postages on letters.
Received	38, 448	50, 714	$5, 033 58
Sent	38, 831	40, 047	6, 511 18
Total	77, 279	90, 761	11, 544 76
Add newspaper postages, at two cents each			1, 815 22
Total postages			12, 369 98
Decrease compared with last fiscal year	19, 703	5, 106	4, 014 86

J. M. McGREW, *Auditor.*

OFFICE OF THE AUDITOR OF THE TREASURY
FOR THE POST-OFFICE DEPARTMENT, *October* 23, 1876.

No. 28.—*Statemennt of letters and newspapers, with the several postages, received in and sent from the United States to the West India Islands during the fiscal year ended June 30, 1876.*

West India Mail-steamers.	Letters.	Newspapers, &c.	Postages on letters.
Received	523, 710	108, 091	$22, 800 13
Sent	466, 555	229, 585	22, 893 31
Total	990, 265	337, 676	45, 693 44
Add newspaper postages, at two cents each			6, 753 52
Total postages			52, 446 96
Compared with last fiscal year { Increase	66, 473	9, 076	
Compared with last fiscal year { Decrease			35, 121 65

J. M. McGREW, *Auditor.*

OFFICE OF THE AUDITOR OF THE TREASURY
FOR THE POST-OFFICE DEPARTMENT, *October* 23, 1876.

No. 29.—*Statement of letters and newspapers, with the several postages, received in and sent from the United States to Japan and China during the fiscal year ended June 30, 1876.*

Pacific Mail Steamship Company.	Letters.	Newspapers, &c.	Postages on letters.
Received	159, 757	96, 857	$2, 806 04
Sent	96, 717	164, 308	10, 650 02
Total	256, 474	261, 165	13, 456 06
Add newspaper-postages, at two cents each			5, 223 30
Total postages			18, 679 36
Decrease compared with last fiscal year	11, 445	7, 060	7, 016 69

J. M. McGREW, *Auditor.*

OFFICE OF THE AUDITOR OF THE TREASURY
FOR THE POST-OFFICE DEPARTMENT, *October* 23, 1876.

No. 30.—*Statement of letters and newspapers, with the several postages, received in and sent from the United States to Honolulu, Auckland, and Melbourne, Sydney, &c., during the fiscal year ended June 30, 1876.*

	Letters.	Newspapers, &c.	Postages on letters.
Received	87,762	81,299	$952 50
Sent	85,727	201,719	7,711 66
Total	173,489	283,018	8,664 16
Add newspaper-postages, at two cents each			5,660 36
Total postages			14,324 52
Increase compared with last fiscal year	14,116	56,651	345 98

J. M. McGREW, *Auditor.*

OFFICE OF THE AUDITOR OF THE TREASURY
FOR THE POST-OFFICE DEPARTMENT, *October* 23, 1876.

No. 31.—*Statement of letters and newspapers, with the several postages, received in and sent from the United States to Guatemala and San Salvador during the fiscal year ended June 30, 1876.*

Pacific Mail Steamship Company.	Letters.	Newspapers, &c.	Postages on letters.
Received	6,815	1,037	$621 50
Sent	9,068	11,636	947 30
Total	15,883	12,673	1,628 80
Add newspaper-postages, at two cents each			253 46
Total postages			1,882 26

NOTE.—Not reported separately last year.

J. M. McGREW, *Auditor.*

OFFICE OF THE AUDITOR OF THE TREASURY
FOR THE POST-OFFICE DEPARTMENT, *October* 23, 1876.

No. 32.—*Statement of letters and newspapers, with the several postages, received in and sent from the United States to Bermuda during the fiscal year ended June 30, 1876.*

		Letters.	Newspapers, &c.	Postages on letters.
Received		23,514	5,460	$1,161 81
Sent		15,090	15,640	721 89
Total		38,604	21,100	1,883 70
Add newspaper-postages, at two cents each				422 00
Total postages				2,305 70
Compared with last fiscal year	Increase	8,433	3,930	
	Decrease			836 51

J. M. McGREW, *Auditor.*

OFFICE OF THE AUDITOR OF THE TREASURY
FOR THE POST-OFFICE DEPARTMENT, *October* 23, 1876.

No. 33.—*Statement of the postages collected in the United States on the letter-mails exchanged between the United States and Nova Scotia and Newfoundland during the fiscal year ended June* 30, 1876.

Amount on prepaid letters sent	$2,089 61
Amount on unpaid letters received	36 99
Total amount	2,126 60

J. M. McGREW, *Auditor.*

OFFICE OF THE AUDITOR OF THE TREASURY
FOR THE POST-OFFICE DEPARTMENT, *October* 23, 1876.

No. 34.—*Weight of letters and newspapers, &c., sent from the United States to Spain during the fiscal year ended June* 30, 1876.

Lines.	Letters.	Newspapers, &c.
	Grams.	*Grams.*
North-German Lloyd of Bremen	82,965	397,259
Cunard line	76,390	379,8[illegible]
Hamburg-American Packet Company	37,775	213,465
Liverpool and Great Western Steam Company	40,585	155,296
White Star line	13,595	73,554
Inman line	5,420	18,573
American Steamship Company	450	1,552
Total	257,180	1,239,577

NOTE.—Prior to January 1, 1876, the Spanish mail was sent in the French mail.

J. M. McGREW, *Auditor.*

OFFICE OF THE AUDITOR OF THE TREASURY
FOR THE POST-OFFICE DEPARTMENT, *October* 23, 1876.

No. 35.—*Weight of letters and newspapers, &c., sent from the United States to European countries during the fiscal year ended June* 30, 1876.

Countries.	Letters.	Newspapers.
	Grams.	*Grams.*
United Kingdom of Great Britain and Ireland	44,258,757	203,014,405
Germany	27,085,027	83,922,270
France	6,438,109	24,617,022
Belgium	823,714	2,541,578
Netherlands	1,263,326	3,215,532
Switzerland	1,752,586	7,426,462
Italy	1,896,310	6,025,393
Denmark	1,210,744	2,254,311
Sweden	2,437,144	3,519,007
Norway	1,866,000	2,890,530
Spain	257,180	1,239,577
Total	89,288,897	340,695,887
Compared with last fiscal year — Increase	.....	23,088,018
Compared with last fiscal year — Decrease	2,275,700	.....

J. M. McGREW, *Auditor.*

OFFICE OF THE AUDITOR OF THE TREASURY
FOR THE POST-OFFICE DEPARTMENT, *October* 23, 1876.

36.—*Number of letters exchanged between the United States and foreign countries, other than transatlantic mails, during the fiscal year ended June* 30, 1876.

Countries.	Number of letters.	
	Received.	Sent.
ama	113, 244	96, 055
ico	38, 042	46, 182
zil	38, 448	38, 831
ador	637	3, 074
ezuela	2, 340	2, 083
w Granada	5, 742	11, 958
atemala and San Salvador	6, 815	9, 068
est Indies, &c	573, 710	466, 555
ina and Japan	159, 757	96, 717
nolulu, Auckland, &c	87, 762	85, 727
rmuda	23, 514	15, 090
Total	1, 050, 011	871, 340
ncrease compared with last fiscal year	21, 044	26, 046

J. M. McGREW, *Auditor.*

OFFICE OF THE AUDITOR OF THE TREASURY
FOR THE POST-OFFICE DEPARTMENT, *October* 23, 1876.

No. 37.—*Amounts reported as due the steamers of the Inman line for services rendered during the fiscal year ended June* 30, 1876.

Quarter ended September 30, 1875	$2, 926 72
Quarter ended December 31, 1875	2, 784 51
Quarter ended March 31, 1876	1, 027 08
Quarter ended June 30, 1876	1, 510 97
Total amount paid	8, 249 28

Amounts reported as due the steamers of the North-German Lloyd of Bremen for services rendered during the fiscal year ended June 30, 1876.

Quarter ended September 30, 1875	$6, 510 23
Quarter ended December 31, 1875	5, 959 46
Quarter ended March 31, 1876	7, 102 76
Quarter ended June 30, 1876	5, 759 75
Total amount paid	25, 332 20

Amounts reported as due the steamers of the Canadian line for services rendered during the fiscal year ended June 30, 1876.

uarter ended September 30, 1875	$763 01
uarter ended December 31, 1875	780 76
uarter ended March 31, 1876	863 18
uarter ended June 30, 1876	801 07
Total amount paid	3, 208 02

ounts reported as due the steamers of the Hamburg American Packet Company for services rendered during the fiscal year ended June 30, 1876.

rter ended September 30, 1875	$9, 449 94
rter ended December 31, 1875	8, 775 98
rter ended March 31, 1876	9, 036 88
rter ended June 30, 1876	7, 200 66
Total amount paid	34, 463 46

Amounts reported as due the steamers of the Cunard line for services rendered during the fis year ended June 30, 1876.

Quarter ended September 30, 1875	$7,462
Quarter ended December 31, 1875	9,664
Quarter ended March 31, 1876	11,314
Quarter ended June 30, 1876	10,463
Total amount paid	38,905 0

Amounts reported as due the steamers of the Liverpool and Great Western Steam Compan for services rendered during the fiscal year ended June 30, 1876.

Quarter ended September 30, 1875	$6,821 4
Quarter ended December 31, 1875	6,133 0
Quarter ended March 31, 1876	4,896 0
Quarter ended June 30, 1876	4,243 2
Total amount paid	22,093 8

Amounts reported as due the steamers of the White Star line for services rendered during th fiscal year ended June 30, 1876.

Quarter ended September 30, 1875	$2,712 7
Quarter ended December 31, 1875	2,175 9
Quarter ended March 31, 1876	5,455 5
Quarter ended June 30, 1876	4,890 0
Total amount paid	15,234 2

Amounts reported as due the steamers of the American Steamship Company for services re dered during the fiscal year ended June 30, 1876.

Quarter ended September 30, 1875	$476 0
Quarter ended December 31, 1875	433 7
Quarter ended March 31, 1876	425 3
Quarter ended June 30, 1876	632 9
Total amount paid	1,968 0

Amounts reported as due the steamers of the Anchor line for services rendered during t fiscal year ended June 30, 1876.

Quarter ended September 30, 1875	$484
Quarter ended December 31, 1875	1,105
Quarter ended March 31, 1876	267
Quarter ended June 30, 1876	109
Total amount paid	1,967

The sea-postages on the mails conveyed from the United States to France by the steamers of t French Steamship Company, and settled in the accounts between the United States a France, during the fiscal year ended June 30, 1876.

Quarter ended September 30, 1875	$418
Quarter ended December 31, 1875	605
Quarter ended March 31, 1876	375
Quarter ended June 30, 1876	677
Total amount paid	2,076

Amounts reported as due the steamers of the Netherlands Steam Navigation Company dur the fiscal year ended June 30, 1876.

Quarter ended September 30, 1875	$1
Quarter ended December 31, 1875	1
Quarter ended March 31, 1876	--
Quarter ended June 30, 1876	--
Total amount paid	2

Amounts reported as due the steamers of the Pacific Mail Steamship Company for the conveyance of the mails between the United States and Panama during the fiscal year ended June 30, 1876.

Quarter ended September 30, 1875	$4,535 16
Quarter ended December 31, 1875	4,335 48
Quarter ended March 31, 1876	4,101 53
Quarter ended June 30, 1876	3,061 59
Total amount paid	16,033 76

Amounts reported as due the steamers conveying the mails between the United States and the West India Islands, Mexico, Brazil, New Granada, Bermuda, and New Zealand for services rendered during the fiscal year ended June 30, 1876.

Quarter ended September 30, 1875	$5,607 63
Quarter ended December 31, 1875	6,161 77
Quarter ended March 31, 1876	9,667 69
Quarter ended June 30, 1876	7,053 79
Total amount paid	28,490 88

Amounts reported as due the steamers conveying the mails between the United States and Nova Scotia for services rendered during the fiscal year ended June 30, 1876.

Quarter ended September 30, 1875	$256 37
Quarter ended December 31, 1875	293 03
Quarter ended March 31, 1876	236 20
Quarter ended June 30, 1876	125 55
Total amount paid	911 15

The following reports for the transportation of closed mails for the periods named have been made during the fiscal year ended June 30, 1876.

To the steamers of the Liverpool and Great Western Steam Company:

Quarter ended March 31, 1875	$1,393 28
Quarter ended June 30, 1875	109 52
Total	1,502 80

To the steamers of the Cunard line:

Quarter ended December 31, 1874	428 35
Quarter ended March 31, 1875	478 27
Quarter ended June 30, 1875	2,046 90
Total	2,953 52

To the steamers of the White Star line:

Quarter ended March 31, 1875	53 25
Quarter ended June 30, 1875	1 17
Total	54 42

To the steamers of the Hamburg-American Packet Company:

Quarter ended December 31, 1874	229 17
Quarter ended March 31, 1875	162 38
Quarter ended June 30, 1875	125 65
Total	517 20

To the steamers of the North-German Lloyd line:

Quarter ended December 31, 1874	465 02
Quarter ended March 31, 1875	27 56
Quarter ended June 30, 1875	7 30
Total	499 88

To the steamers of the Eagle Hamburg line:

Quarter ended December 31, 1874	$1,692 59
Quarter ended March 31, 1875	2,567 56
Quarter ended June 30, 1875	1,149 42
Total	5,409 57

To the steamers of the Inman line:

Quarter ended December 31, 1874	2 56
Quarter ended March 31, 1875	1 88
Quarter ended June 30, 1875	1,310 55
Total	1,314 99

To the steamers of the Dominion line:

Quarter ended March 31, 1875	63 98
Total	63 98

J. M. McGREW,
Auditor.

OFFICE OF THE AUDITOR OF THE TREASURY
FOR THE POST-OFFICE DEPARTMENT, *October* 23, 1876.

No. 38.—*Balances due the United States on the adjustment of the postal accounts between the United States and Switzerland for the quarters indicated; settlements made during the fiscal year ended June* 30, 1876.

Quarter ended June 30, 1875	$1,900 69
Quarter ended September 30, 1875	21 11
Quarter ended December 31, 1875	24 73
Total	1,946 53

Balances due the United States on the adjustment of the postal accounts between the United States and the Netherlands for the quarters indicated; settlements made during the fiscal year ended June 30, 1876.

Quarter ended June 30, 1875	$1,170 12
Quarter ended September 30, 1875	12 74
Quarter ended December 31, 1875	14 00
Total	1,196 86

Balances due the United States on the adjustment of the postal accounts between the United States and Italy for the quarters indicated; settlements made during the fiscal year ended June 30, 1876.

Quarter ended June 30, 1875	$1,405 74
Quarter ended September 30, 1875	16 26
Quarter ended December 31, 1875	19 36
Total	1,441 36

Balances due the United States on the adjustment of the postal accounts between the United States and France for the quarters indicated; settlements made during the fiscal year ended June 30, 1876.

Quarter ended June 30, 1875	$4,538 03
Quarter ended September 30, 1875	4,776 10
Quarter ended December 31, 1875	3,993 24
Total	13,307 37

ılances due the United States on the adjustment of the postal accounts between the United States and the empire of Germany for the quarters indicated; settlements made during the fiscal year ended June 30, 1876.

uarter ended September 30, 1875	$451 49
Total	451 49

Balances due the United States on the adjustment of the postal accounts between the United States and Belgium for the quarters indicated; settlements made during the fiscal year ended June 30, 1876.

Quarter ended September 30, 1875	$57 58
Total	57 58

Balances due the United States on the adjustment of the postal accounts between the United States and Sweden for the quarters indicated; settlements made during the fiscal year ended June 30, 1876.

Quarter ended September 30, 1875	$10 36
Quarter ended December 31, 1875	12 15
Total	22 51

Balances due the United States on the adjustment of the postal accounts between the United States and Norway for the quarters indicated; settlements made during the fiscal year ended June 30, 1876.

Quarter ended September 30, 1875	$119 34
Quarter ended December 31, 1875	12 17
Total	131 51

Balances due the United States on the adjustment of the postal accounts between the United States and Spain for the quarters indicated; settlements made during the fiscal year ended June 30, 1876.

Quarter ended September 30, 1875	$1 91
Total	1 91

Balances due from the United States to the empire of Germany on the adjustment of the postal accounts between the United States and Germany for the quarters indicated; settlements made during the fiscal year ended June 30, 1876.

Quarter ended June 30, 1875	$12,224 91
Total	12,224 91

Balances due from the United States to the United Kingdom of Great Britain and Ireland on the adjustment of the postal accounts between the United States and the United Kingdom for the quarters indicated; settlements made during the fiscal year ended June 30, 1876.

uarter ended March 31, 1875	$5,860 64
uarter ended June 30, 1875	3,520 18
Total	9,380 82

ılances due from the United States to the kingdom of Denmark on the adjustment of the postal accounts between the United States and Denmark for the quarters indicated; settlements made during the fiscal year ended June 30, 1876.

arter ended June 30, 1875	$212 63
Total	212 63

Balances due from the United States to the kingdom of Belgium on the adjstment of the postal accounts between the United States and Belgium for the quarters indicated; settlements made during the fiscal year ended June 30, 1876.

Quarter ended June 30, 1875	$2,011 60
Quarter ended December 31, 1875	3,827 62
Total	5,839 22

Balances due from the United States to the kingdom of Sweden on the adjustment of the postal accounts between the United States and Sweden for the quarters indicated; settlements made during the fiscal year ended June 30, 1876.

Quarter ended June 30, 1875	$3,457 46
Total	3,457 46

Balances due from the United States to the kingdom of Norway on the adjustment of the postal accounts between the United States and Norway for the quarters indicated; settlements made during the fiscal year ended June 30, 1876.

Quarter ended March 31, 1875	$1,464 29
Quarter ended June 30, 1875	1,025 04
Total	2,489 33

J. M. McGREW
Auditor.

OFFICE OF THE AUDITOR OF THE TREASURY
FOR THE POST-OFFICE DEPARTMENT, *October* 23, 1876.

44TH CONGRESS, 2d Session. } HOUSE OF REPRESENTATIVES. { Ex. Doc. 1, Part 4.

REPORT

OF THE

SECRETARY OF THE NAVY;

BEING PART OF

THE MESSAGE AND DOCUMENTS

COMMUNICATED TO THE

TWO HOUSES OF CONGRESS

AT THE

BEGINNING OF THE SECOND SESSION OF THE FORTY-FOURTH CONGRESS.

WASHINGTON:
GOVERNMENT PRINTING OFFICE.
1876.

CONTENTS.

REPORT OF THE SECRETARY OF THE NAVY.

	Page.
rce	3
n of the vessels	4
am recommended	6
on monitors	7
-stations	8
el of the enlisted men	11
lucation	12
mical observations	13
l Almanac	15
for interoceanic canal	15
nation of geographical positions	16
a exploration	17
xpedition	17
raphy	17
raphic Office	19
ce	20
ards	21
nial Exhibition	22
-station, Saint Mary's River	22
ension-fund	23
tes and expenditures	23
ion	26

SUPPLEMENT.

liture of Navy appropriations	27
ter and condition of the Navy, 1869–1876	27
l operations of the fleets, &c	34

APPENDIX.

Estimates, Secretary's Office	41
Naval Academy	42
Report of superintendent	42
Estimates of appropriations	44
Report of board of visitors	47
Address to the graduating class	49
Cruise of practice-ship Constellation	54
Cruise of practice-ship Mayflower	55
Bureau of Yards and Docks	58
Bureau of Navigation, with reports of Naval Observatory, Hydrographic Office, &c	89
Bureau of Equipment and Recruiting	103
Bureau of Ordnance	110
Bureau of Medicine and Surgery	232
Bureau of Provisions and Clothing	247
Bureau of Steam-Engineering	249
Bureau of Construction and Repair	278
Marine Corps	282
Report of Prof. E. S. Holden on astronomical instruments	289
Report of Rear-Admiral T. A. Jenkins, Centennial Exhibition	324
Detailed movements of vessels	327

REPORT

OF

THE SECRETARY OF THE NAVY.

NAVY DEPARTMENT,
Washington, D. C., November 29, 1876.

SIR: The following report of the Navy Department and naval service for the present year is respectfully submitted.

NAVAL FORCE.

There are now belonging to the Navy of the United States 146 vessels of 150,157 tons measurement. Exclusive of howitzers and Gatlings they carry 1,142 guns. Of these, 123, carrying 913 guns, with a measurement of 120,894 tons, have steam-power, and 23, carrying, nominally, 229 guns, with a measurement of 29,263 tons, are sailing-vessels.

The steam-vessels are rated as follows:

		Guns.	Tons.
5	first-rates	188	15,163
29	second-rates	478	53,800
30	third-rates	164	19,506
6	fourth-rates	4	3,143
27	tugs	6	4,729
2	torpedo-boats	1	749
24	iron-clads	72	23,804
123		913	120,894

The sailing-vessels are rated as follows:

		Guns.	Tons.
4	second-rates	36	10,700
15	third-rates	188	15,919
4	fourth-rates	5	2,644
23		229	29,263

The iron clad vessels are rated as follows:

		Guns.	Tons.
6	second-rates	28	12,261
4	third-rates	16	4,275
14	fourth-rates	28	7,268
24		72	23,804

All the tugs are regarded as fourth-rates.

Of the whole number of vessels, 75 are at present in actual use, as

follows: 37 are in commission attached to fleets, in which number a embraced 11 iron-clad vessels on the North Atlantic station; 2 are use as training-ships; 6, on special service and as dispatch and freig ships; 2 are torpedo-boats; 5 are receiving-ships; 2 are store-ships; more are used by States, under act of Congress, as school-ships; and 1 are in use as quarters, gunnery-ships, tenders, &c., at the navy-yard and shore-stations. Of the remainder, 4 are preparing and almost ready for sea; 8 are under repairs; and 59 are laid up at the various navy-yards.

The actual condition of the material of the naval service at this time, and what has been done with it during your administration, may perhaps be better understood by comparing it with itself as it existed in 1869. This may be done fully by referring to the particular statement of the character, service, repairs, and condition of each ship, which will be found appended to this report, and a general idea may be obtained from the following summary, which contains some of the results of the fuller statement referred to.

The number of vessels belonging to the Navy in 1869, including screw and side-wheel steamers, tugs, iron-armored vessels, and sailing-ships was, as follows:

Iron-clads	5
Screw-steamers	6
Side-wheel steamers, large and small	2
Tugs and small side-wheel steamers, not fitted for fighting	3
Sailing-vessels, store, surveying, and receiving ships	2
Whole number	20

Of these there were unavailable for fighting purposes the following, viz:

Vessels on the stocks built of live-oak	1	
Vessels on the stocks built of white oak	5	
Tugs used for yard purposes	32	
Sailing-vessels used as practice, store, and receiving vessels, but of no use for fighting purposes	29	
Iron-clads on the stocks built of white oak, and unfit for use by reason of decay	4	
Iron-clads not of sufficient displacement, and entirely unfit for war purposes	21	
In all	92	
To which should be added the Niagara, Puritan, and Susquehanna, which were without machinery, and in such condition that as much time and money would be required to put them in sea-going order as to build new vessels. They were consequently unavailable	3	
Total		
Which deducted from the 203 vessels, as above, leaves as the available force of the Navy at that time		1

Of the 108 available vessels, as above, 47 were being completed repaired, or were laid up at the several navy-yards; and of these, screw-steamers and 4 iron-clads were built of white oak, and had all begu

to decay. Their usefulness was therefore of short duration, as their history, found in the appendix to this report, shows. The other iron-clads, which possessed the proper fighting qualities, and are included in the 108 vessels, were also more or less rotten, and all required extensive repairs. Of the 203 vessels of 1869, there have been sold 46; broken up, 18; lost at sea, 5—69 vessels; thus reducing the number to 134 vessels. To which add the addition made to the Navy since 1869, of new vessels, 10; purchased vessels, 2; making the whole number on the register at the present time 146 vessels. For a full and particular understanding of the character and condition of these vessels, reference may be had to the appendix already mentioned. This will show that of our present force of 146 vessels, of every class, 40 are built of iron viz, 5 double-turreted iron-clads, 15 single-turreted monitors, 2 torpedo-boats, and 18 steamers of various classes. Of the remainder, 65 are of live-oak, viz, 1 iron clad, 5 steamers of the first rate, 20 steamers of the second rate, 19 steamers of the third rate, and 20 sailing-vessels. The remaining 41 are white-oak ships, of almost every class. Of the whole number, 75 are, as has been before stated, in actual service, and 4 are preparing for sea; 16 may be considered as entirely used up and unfit for future service; and the balance are at the various navy-yards, som requiring slight and others extensive repairs; but most of them could be made ready for any special service in a short time. Seventeen of our steamers have been furnished with compound engines and boilers of the best class, and with the latest improvements, and nearly all our other steamers have, during the last eight years, been supplied with new boilers, and their machinery extensively repaired.

There is also on hand, stored at the various navy-yards, live-oak timber sufficient for 35 new ships of war, besides a large quantity of other valuable timber and naval material of every kind.

This statement shows that after eight years of active service of every kind, during which period it has suffered the loss of four ships by actual disaster, and seen many others of its valuable cruisers come to final decay and utter worthlessness, by reason of hasty construction from perishable material, during time of war, our Navy is now, in the character and condition of its ships and material, in a condition far superior to that in which it was in 1869, and indeed far more powerful for our warlike purposes than it has ever before been in time of peace. It does not compare, either in number or character of vessels, with the expensive establishments of those European nations whose mutual relations keep them always in armed array, whose contiguous coasts and deep harbors at home, and scattered colonies all over the world, seem to require that they should constantly rival each other, at whatever expense, in the size and power of their naval vessels and armaments; but, for the defensive purposes of a peaceful people, without colonies, with a dangerous coast, and shallow harbors, separated by a vast ocean from warlike naval powers, our Navy is not without strength, and when its iron-clad

fleet shall be completely repaired, a work requiring now but little tim and expense, and its force supplemented by the comparatively chea addition herein recommended, it will, I think, be found sufficient t resist any force which could be brought across the ocean to attack us; and powerful also for offensive operations upon the seas and among the islands which lie contiguous to our own shores. In view of the fact that the appropriations for the two principal working bureaus of the Department average but little over five millions annually, and considering the cost of merely maintaining a Navy, consisting largely of ships hurriedly built of perishable material, which after requiring for a few years constant repair finally drop out of the service from utter worthlessness, I think that this state of things reflects great credit upon those officers through whose practical knowledge and ability the Department has been able to utilize all that there was valuable in the Navy, and to bring it to its present state of efficiency.

The question of what should compose a sound and economical, bu efficient, naval force has presented during the past few years so many different aspects that we may perhaps congratulate ourselves that w have not followed step by step in the practical but expensive development of the problem in which other maritime nations have been engaged The question constantly recurs, however, brought up by conflicting in terests and opinions, shall we enter upon the expensive and unsatisfactory construction of armor-plated gun-bearing vessels, involving millions of dollars in the cost of each one? or shall we be content with providing ourselves, at a minimum cost, with the means of destroying such vessels should they appear in hostile attitude on our coasts or in our bays or harbors? Fast, well-built wooden cruisers, proper for the police of the seas, serving as schools of instruction in time of peace and capable of destroying an enemy's commerce in time of war, are under all conditions serviceable. The monitor class of vessels has, for us, special and valuable uses in conjunction with other forces. The torpedo-school give our officers the instruction necessary to utilize whatever there is in this most efficient arm of attack and defense; and I would add to the force a new element, the marine ram, which promises, when constructed upon scientific principles, in forms of special strength for its particular and appropriate service, to be a weapon of most destructive warfare. The construction of this class of vessels has been carefully considered for several years past by a naval officer of high rank, assisted by able experts, and detailed plans are put at the service of the Department without cost or charge of any kind. The construction of such a vessel of the best material and of special strength would involve an expense of about $350,000, and if successful, as it promises to be, it would add a new element tending to make our force complete in itself, at once economical and efficient.

With such a force and with no colonies to defend, I think we may well *dispense*, for the present at least, with the heavy-armored and unwieldy

iron-clads of European nations, and, also, with the monster cannon necessary to penetrate them. Any vessel which can safely cross the seas to enter our harbors or to lie upon our shores will be found vulnerable to cannon of moderate weight and caliber, while the heaviest armor will not protect a ship from the attacks of torpedoes managed by brave and well-instructed officers. Thus, our monitor system, supported by the marine ram, commanded by enterprising officers, and re-enforced by the deadly torpedo in skillful and scientific hands, will, I think, supply all that is absolutely necessary for the naval share of our coast-defense, and will be found efficient, for our purposes, against any foreign iron-clads which can reach our coasts or enter our harbors. With these we may rest content for the present, but it must be understood that the Navy, in all its efficient elements, is in a constant state of transition and progression, and can only be kept efficient by seizing, experimenting upon, and developing, in the quiet times of peace, each new principle of warlike progress as it arises.

Of the amount of appropriations asked for the next year, as hereinafter stated, I beg to suggest that the sum of $1,550,000 of the amount estimated for the Bureau of Construction and Repair and $750,000 of that estimated for the Bureau of Steam-Engineering, be made available at once, in order that the repairs of our five double-turreted iron-clads, which have been for some time regularly progressing out of the current annual appropriations, may be completed. These have been delayed in the hands of the contractors during the current year by the fact that the appropriations made for these bureaus were not sufficient for their continuance. The reasons why this should be done at once are many, and will be readily understood. The vessels are, as I have said, in the hands of the contractors, actually in a state of partial repair. These repairs, to be economically and properly done, should progress regularly, as a continuous work, with the different parts advancing simultaneously, of homogeneous material, on a concurrent plan, under the same general direction, and, as far as possible, with the same workmen. To stop it from time to time must involve more or less of change in all these conditions, to the manifest increase of the cost and injury to the quality of the work. Delay involves, also, increased cost of superintendence, care-taking, and preservation, and risk of injury or loss to the public property. The work can be done now cheaper than at any other time, and if done now it will give employment, at a season of great distress, for establishments and workmen to whom it is not only kindness but practical wisdom on the part of the Government to afford all proper encouragement and assistance. Besides, the ships are useless to the Government while in progress of repair, but when concluded, they will constitute a large element of the strength of our Navy, and, adding immensely to its fighting power, will raise it to a position more in harmony with our national responsibility and requirements.

There is no additional money asked for this purpose, but only that a

portion of the regular appropriations be made available for it now. T amount asked is the same which was estimated for this work last yea but which was not then appropriated; and by taking it from the amoun estimated for the next year, without enlarging that estimate, the Department will be able to go on with this necessary work, to the great advantage of the Government, without increasing the appropriations, and the work being done, the bureaus can be carried on with the amounts estimated for them reduced by the amount which this work costs.

CRUISING-STATIONS.

These are the same as were reported last year, including within the limits assigned to them every important field of naval operations. The strength of the force on each station is as follows:

European station.—Rear-Admiral John L. Worden commands the naval force on the European station, which is now much reduced. The Franklin, Congress, Juniata, and Alaska have returned home during the present year, and the squadron has been re-enforced only by the Marion and the Vandalia.

In pursuance of orders of the Department the Congress and Juniata left Villefranche November 29, 1875, for Port Royal, to join the force on the North Atlantic station.

The Alaska left Lisbon January 1, for the coast of Africa, under special instructions from the Department, the revolt of the native tribes against the republic of Liberia being then in progress and seriously threatening the safety of the colonists. Capt. A. A. Semmes, commanding the Alaska, was ordered to confer with the minister of the United States at Monrovia and the President of Liberia, to protect American citizens and interests; to manifest the friendly disposition of the people of the United States and Government toward the citizens of the government of Liberia; to cruise along the coast, show the flag to the natives, and act in conjunction with the Liberian authorities in suppressing the revolt among the natives. She arrived at Monrovia, February 3. The President of Liberia, with his suite, was received on board.

The Franklin, after proceeding under special orders to Vigo, Spain, left that port for home on the 28th of September. Delayed by adverse winds and calms, her voyage was long, and she only reached New York on the 23d of the present month.

The present aspect of European affairs makes it proper that this squadron should be strengthened as promptly as possible, and the Department contemplates re-enforcing it with the Trenton as soon as she can be fitted out, and in the mean time with such other ships as can be spared from their present duty.

Asiatic station.—The force on this station is the same as stated in the last annual report of the Department, with a single change. It was reduced in May by the Saco, ordered to San Francisco, and again in-

creased by the arrival in August of the Alert, from New York, via the Suez Canal. Rear-Admiral William Reynolds remains in command.

The following-named vessels now compose his force: The Tennessee, (flag-ship,) Kearsarge, Ashuelot, Alert, Monocacy, and Palos—all with steam-power, and carrying altogether forty-eight guns.

Owing to the great distance of this station from our Atlantic ports, it has been found to be to the interest of the Government to repair some of the vessels out there rather than to send them home for that purpose. This has been done during the past year, and some which have been on the station for two or three times the usual time have been provided with new boilers and otherwise repaired, so as to make them useful cruisers for some time to come.

North Pacific station.—The Pensacola, (flag-ship,) and the Lackawanna, are the only vessels now in commission on this station, which is under the command of Rear-Admiral Alexander Murray, who relieved Rear-Admiral John J. Almy, July 1.

The Tuscarora and Portsmouth, which have been attached to this station during the year, were put out of commission at Mare Island—the former in September and the latter in August.

South Pacific station.—The vessels on this station at the date of the last annual report of the Department were the Richmond, (flag-ship,) Omaha, and stationary store-ship Onward at Callao, and Rear-Admiral Reed Werden was then in command.

Rear-Admiral Werden was relieved July 13 by Commodore C. H. B. Caldwell, who went out on the mail-steamer from New York June 23.

On the 12th of August Commodore Caldwell sailed from Callao, in the Richmond, for Montevideo, touched at Valparaiso, and was heard from at Sandy Point, Straits of Magellan, early in October. He is no doubt now on the coast of Brazil, and, in pursuance of the Department's orders, in command of the naval force on the South Atlantic station.

On the departure of Commodore Caldwell, Capt. Edward Simpson, commanding the Omaha, was left the senior officer present on this station, but Rear-Admiral Murray arrived recently at Panama and is now in command in those waters.

The South Atlantic station.—The force on this station, which consisted of the Brooklyn, (flag-ship,) Monongahela, and Wasp, and was under command of Rear-Admiral William E. Le Roy, was reduced last December by the withdrawal of the Brooklyn and Monongehala for service on our own coast and the departure of Rear-Admiral Le Roy in his flag-ship for Key West.

The station has since been re-enforced by the arrival of the Richmond from the South Pacific station, and the command devolves, under the orders of the Department, upon Commodore C. H. B. Caldwell. The Frolic is the only other vessel on the station, the Wasp having been sold.

The North Atlantic station.—The force on this station, which consisted one year ago of nine cruisers and six other vessels, and was under the command of Rear-Admiral J. R. M. Mullany, was soon afterward largely increased by attaching to it vessels from the European and the South Atlantic station, and putting in commission some of the new sloops and ten of the monitors. By these accessions it consisted in February, when Rear-Admiral Mullany was relieved by Rear-Admiral William E. Le Roy, of twenty-four vessels, not including store-ships and tugs, viz: Hartford, (flag-ship,) Brooklyn, Congress, Plymouth, Ossipee, Vandalia, Marion, Monongahela, Swatara, Shawmut, Alert, Huron, Dictator, Wyandotte, Passaic, Catskill, Nantucket, Lehigh, Montauk, Canonicus, Ajax, Saugus, Mahopac, and Manhattan. In addition, there were in commission two torpedo-boats, the Alarm and the Intrepid, also four other steamers, the Powhatan, Juniata, Tallapoosa, and Dispatch, all within the limits of the station, which, although not strictly part of Rear-Admiral Le Roy's command, were available for immediate service; thus making at hand thirty-one vessels, twelve of which were monitors and two powerful torpedo-boats. This force was maintained as long as there seemed to be any possibility of its use. Some of the cruising-vessels were then sent to other stations, others were put out of commission, and nearly all the monitors, although kept in commission, were reduced in their complements, with only a sufficient number of officers and men retained on board to keep the vessels in good condition.

The force on this station by recent additions now consists of the Hartford, Plymouth, Swatara, Adams, Essex, Ossipee, Huron, Ranger, all the monitors above named except the Nantucket, and the store-ship New Hampshire, hospital-ship Pawnee, and tug Sea-Weed stationed at Port Royal, S. C.

The Powhatan, Despatch, Tallapoosa, Monongahela, Rio Bravo, Alarm, and Intrepid are also in commission and ready for service, but not strictly a part of the squadron.

The general operations of our cruisers on the several stations will be found in brief in the supplement hereto annexed, entitled "General operations of fleets," and more at large in the statement and reports published in the appendix, and which will be found interesting to those desiring information on this subject.

The Department has lately adopted the plan of retaining all ships, on going into commission, upon this coast and attached to the North Atlantic squadron for a few months previous to ordering them abroad. It is believed that the effect has been beneficial, as any defects in the ships or their machinery can then be remedied at home, and the discipline of the *personnel* can be perfected in our own waters. With this preliminary drill and inspection the ships reach foreign stations in an efficient and creditable condition.

The Department has also commissioned as receiving-ships at the different naval stations the frigates Wabash and Colorado at Boston and

New York, and proposes to place the Franklin at Norfolk, instead of the hulks formerly used for this purpose. These ships, with those used for training and school ships, form a reserve, maintained without additional expense, and ready to be used in any emergency.

The reduction of the force of our fleet, by act of Congress, from 8,500 to 7,500 men has placed our Navy, in the *personnel* of the enlisted men, below that of nearly every navy of Europe. The effect of this reduction has been to lose to the service many valuable seamen, who, for want of continuous employment in the Navy and in the absence of any commerce of our own, have been forced to go abroad for employment. Their services are thus lost to the country, and the time and care given to their education as men-of-war's men has been to some extent in vain. As a remedy for this misfortune, and for the purpose of maintaining a trained class of men in the Navy, skilled in their duties and devoted to their flag, I have the honor to repeat my recommendations of last year, that Congress give the necessary authority to enlist annually 750 boys for the Navy, under existing laws, but in addition to the number of men now allowed. The cost of these boys, so far as the pay of the Navy is concerned, would not amount to more than the cost of 250 men; and it is expected that this number enlisted annually will, in the course of a few years, not only fill the vacancies made by discharge, death, and desertion, but finally man our fleet with educated American seamen.

The system of training boys has been in successful operation for little more than one year, and there are at present 479 in the service, one-half of them under instruction on board the training-ships Minnesota and Monongahela, and the others already afloat in various sea-going vessels. The Department has stationed the Minnesota at New York, the Constitution at Philadelphia, and the Monongahela at Baltimore, as permanent school-ships for these lads, and the experience of the past year fully demonstrates the success of this effort to improve our seamen. I feel myself, therefore, most fully justified in earnestly renewing my recommendation of this addition to the *personnel* of the Navy.

I would also call your attention to other recommendations contained in the report of the Chief of the Bureau of Equipment and Recruiting, intended to benefit the seaman of the Navy. Among them is the urgent and often-repeated recommendation that the enlisted men of the Navy may be allowed an outfit of clothing. This allowance has, for several years, been considered both by the Department and by the Navy at large as eminently proper and just, and has, on several occasions, been urged in Congress, but as yet it has failed to receive that attention which I think it deserves. I trust, however, that sooner or later a law will be passed granting an outfit of clothing to the enlisted men, under such restrictions and regulations as the Department may establish.

The report of the Chief of the Bureau of Equipment and Recruiting contains another request which I deem worthy of consideration. He urges the establishment of a banking system for the Navy, similar to

that now in force in the Army, where it has produced the most satisfactory results. The Army law authorizes the payment of interest at 4 per cent. upon all sums of $50 and upward deposited by any enlisted man with the paymasters, subject to certain conditions and restrictions. If this system should be adopted for the Navy, a careful estimate of the sum that would be required for the payment of the interest places it at but $24,000 per annum. The men of the Navy are rarely paid off before the expiration of their three years' term of service, and the money, which is actually their own, is thus left in the United States Treasury, without any benefit accruing to the rightful owners. It is no more than proper and just that a moderate interest should be granted by the Government for its use. I am convinced that the foregoing suggestions, if put into effect as laws, will prove of great and lasting benefit to our Navy, without adding materially to the cost of its maintenance, and I therefore respectfully refer them to the favorable consideration of Congress.

NAVAL EDUCATION.

The Academy.—The worth of an educational institution must be judged by the adaptability of the course of studies pursued to the profession for which its students are destined, and by the thoroughness with which these are taught.

The Naval Academy, under its able Superintendents, has been conducted with these objects in view, and the basis of an education afforded by this institution is such as is demanded for Navy officers of the present day.

In the past, in the days when canvas was the motive-power, the battery smooth-bore guns, and gunnery in a crude state, a general knowledge of seamanship, navigation, and gunnery was deemed sufficient for the ordinary education of a Navy officer. A few years has changed this, and the Naval Academy has kept pace with these changes as they have occurred.

Recent improvements in naval warfare are largely indebted to the sciences. A built-up gun, a torpedo, an iron gun-carriage, the armor on a ship's side, the newly-improved engines, the powerful gunpowders, dynamite, and other explosives, the use of the electric telegraph in longitudes, the understanding of the machines now in use for testing the velocity and strength of powder, and many other changes which the last few years have brought forth, are based upon and permeated by some principle of physics, chemistry, electricity, mechanics, and mathematics; so that at the present day an officer, to be familiar with the weapons he is called to wield, must be acquainted with the sciences upon whose principles these weapons are constructed. These are taught at the Naval Academy. Ships will not again be fought under sail, and the tactics of Paul Hoste, so valuable in their day, must give way to those of recent date.

As the motive-power, in action, is hardly of less importance than the

battery itself, it behooves a commanding officer to have an intelligent idea of the construction, working, and proper use of the engines and boilers of the vessel he commands; hence the instruction in both theoretical and practical steam-engineering. It must not be understood, however, that steam and its applications are taught to the exclusion of seamanship. On the contrary, this branch, with the addition of shipbuilding, is taught with every minuteness of detail, requiring but the constant practice afloat, in after life, to give the quick perception, the prompt decision, and instant action so requisite and so remarkably pertaining to the thorough seaman under all circumstances. Now, as heretofore, the first requisites of a Navy officer must be seamanship, navigation, and gunnery, however closely these may be crowded by other acquirements indispensably necessary.

As I have before said, the system of the Naval Academy has kept pace with the changes which have taken place, and the branches there taught are those adapted to the naval profession of to-day. With such a basis of education, the officers who have had the advantages of this institution should excel in every branch of their profession.

The naval signal-service.—The system of signals in the Navy has undergone great improvement within the past few years, more attention having been given to this most important subject than heretofore. A new and complete signal-book has been issued, bearing the impress of the talent and intelligence of its compilers and of the labor and care bestowed upon it.

Experiments have been made with various descriptions of lights for signaling on shipboard; with many patterns of side-lights and running lights, to prevent collisions at sea; as also with systems of fog-signals, and flash and sound telegraphy. A careful supervision has been exercised over the signal departments of vessels in commission.

The torpedo station.—The branches taught at the Naval Academy are immediately brought into practice at the torpedo station, which has been furnished, as far as practicable, with every appliance for making and experimenting with this formidable weapon of modern warfare. A class of such officers as can be spared from the other duties of the service are instructed at the torpedo station during several months of each year in all relating to the torpedo. All gain a practical knowledge of its manipulation; some, taking a special interest in this branch, pursue it to invention. Though this school of instruction has necessarily been conducted on a limited scale, it has grown in importance and has been marked by improvement from year to year.

ASTRONOMICAL OBSERVATIONS.

During my term of office the duties of the Naval Observatory have been diligently and faithfully performed, under the able superintendence of Rear-Admirals B. F. Sands and C. H. Davis. The quiet and unobtrusive manner in which the work of this institution is carried on, pre-

vents the general public, perhaps, from appreciating its value, and few people know how diligently and constantly the tasks devolving on astronomers are prosecuted.

Provided by wise liberality with the best instruments obtainable, the Naval Observatory has risen to a high rank, both at home and abroad, for efficiency and for the character of the work accomplished, and has amply fulfilled the expectations of its founders. As is eminently pertinent, the work of general scientific research has not been prosecuted, but the more appropriate routine for a government observatory, of making such daily and nightly observations of sun, stars, and planets as may afford information useful to the navigator and surveyor, has been constantly carried on.

In addition to the regular routine-work of the observatory, expeditions for the observation of the solar eclipse of December 22, 1870, and for the transit of Venus on December 8, 1874, were organized and sent out, in both cases with most gratifying success. The highest commendations of the eclipse observations were received from astronomers at home and abroad, and the work of reducing the transit of Venus observations has progressed sufficiently to prove that the labor and expense attendant on the expedition was well bestowed. The work at the desolate stations, intrusted to Navy officers, was well and satisfactorily performed, affording another proof, if such were needed, that the groundwork of education received at the Naval Academy produces most satisfactory results. The several parties, composed of civilians, military and Navy officers, co-operated with the most gratifying harmony. All the parties and instruments dispatched to different parts of the world have been safely returned, and it is satisfactory that our countrymen, by care and skill, were successful in the safe return of their instruments, as, from several places, in this the astronomers of other nations failed.

Besides the yearly volume of observations and results, there has been published by the Observatory many other contributions to astronomical science, among the most important of which are:

A report on the solar eclipse of 1869.

A report on the position of fundamental stars, by Professor Newcomb.

A report on the position of 151 stars in Præsepe, by Professor Hall.

A report of the solar eclipse of 1870.

A report of the right ascensions of equatorial fundamental stars, by Professor Newcomb.

A catalogue of 10,658 stars, by Professor Yarnall, depending on upwards of 100,000 observations.

An investigation of the Uranian and Neptunian systems with the 26-inch equatorial, by Professor Newcomb.

The Observatory has also co-operated in the determinations of longitude, by the telegraphic method, of Havana, Saint Louis, Detroit, *Carlin*, (Nev.,) Austin, (Nev.,) Ogden, Bethlehem, (Pa.,) and Key West.

ctric clocks, controlled by the clock at the Observatory, have been lished at the Navy, Treasury, and State Departments, and at the l-Office, and it would appear desirable that this system should be led to all the Departments and to the Chambers of the Senate ıe House of Representatives. The time is furnished daily to the rn Union Telegraph Company, and is by them distributed over untry for the benefit of railroads, commerce, and the public gen- An extension of this system seems desirable.

chronometers belonging to the Navy are as heretofore kept at the ratory, and their errors carefully ascertained before sending them ırd of vessels.

ın the opening of the South Kensington Exhibition of Scientific ments, at London, in June last, Prof. E. S. Holden, U. S. N., was rarily detached from duty at the Observatory and directed to ex- and report on the exhibition. This was thoroughly and promptly plished, and a most interesting and valuable report was submit- him to the Department.

THE NAUTICAL ALMANAC.

preparation and issue of the American Ephemeris and Nautical ıac, under the able and scientific superintendence of Prof. J. H. C. , U. S. N., has reflected credit on the country and on the Navy, upplies that which would otherwise necessarily be drawn from l.

ı issued to the vessels of the Navy, to our commerce, to the vari- :ploring and surveying expeditions of the Army, to the United Coast Survey, the Land-Office, the various observatories and as- ners, and to colleges and other institutions, especially to those in astronomical observations or investigations are conducted. From ı year its tedious and monotonous work of calculation goes steadily th such additions as new discoveries require.

SURVEYS FOR INTEROCEANIC CANAL.

ing the last eight years the Navy have been also employed in va- explorations and surveys in Central America and on the isthmus ama, with a view to ascertain the best locality for a ship-canal to :t the Atlantic and Pacific Oceans. We have made—

A sufficient and conclusive examination and survey of the isth- Tehuantepec.

An instrumental survey locating a canal-route from the vicinity ytown via Lake Nicaragua, the Rio del Medio, and Rio Grande to on the Pacific coast. In this vicinity a careful examination was ıf other routes besides the one chosen in order to select the best. surveys extended over two seasons, and estimates for the entire labor and materials have been submitted.

3d. A survey for a canal from the harbor of Aspinwall to Panama along the line of the railway, with approximate estimates of cost.

4th. Two attempts, one from either coast, for locating a canal-route between the Chepo River and the Gulf of San Blas, which clearly indicated the impracticability of this route.

5th. Attempts were made in the vicinity of Caledonia Bay to find a route for a canal, but even with a tunnel through the mountains this route was at once seen to be impracticable.

6th. Examinations were made of a route by way of the Tuyra River and the valley of the Atrato, which dispose effectively of the pretensions of Señor Gorgoza and others. It was found that the elevation of the Pacific water-shed, when reached, would make a canal here simply impossible.

7th. An instrumental survey was made, (involving several tentative lines,) and a route located by way of the Uraba River, the mouth of the river Atrato, and by way of the Napipi River to the Pacific. Plans and estimates have been submitted for this route, which involves the construction of a tunnel as well as conduits for water-supply. This work extended over three seasons.

The Department has to regret that no appropriations were made for the publications of this important survey, nor for that of the Isthmus of Panama, equally important in the settlement of the question of the best location for an interoceanic canal.

Although this work does not, strictly speaking, come within the scope of the ordinary duties of naval officers, it has been performed with great zeal, skill, and self-devotion, several of the officers employed having seriously injured their health by protracted exposure in a sickly climate.

DETERMINATION OF GEOGRAPHICAL POSITIONS IN THE WEST INDIES AND CENTRAL AMERICA.

Under the United States Hydrographic Office and the bureau of Navigation, without any extra appropriation, a commencement has been most successfully made of the task of accurately determining points to which future surveys may be referred. The increased accuracy of both instruments and methods makes the errors existing in geographical positions, and especially in their longitudes, no longer tolerable, and in 1874, 1875, and 1876 the work of determining exactly the latitudes and longitudes of eleven stations in the West Indies and Central America was carried out with great success. This work has met with the cordial appreciation of men of science both of our own country and abroad. As the methods and instruments used are those especially employed in this country, it is eminently fit that the work so successfully begun and of such acknowledged importance should be continued along the coast of South America. The instruments, outfit, and staff of officers are ready, with the advantages of experience in the field, and the work can be carried on by a naval vessel without any extra appropriation.

DEEP-SEA EXPLORATION.

Much has also been accomplished in the direction of deep-sea exploration. In two successive cruises of the United States steamer Tuscarora, with a view of laying telegraphic cables in the Pacific, lines of sounding were made first between California, the Sandwich Islands, and Japan, under the command of Commander G. E. Belknap, and between the Sandwich Islands and Australia, under command of Commander J. N. Miller. During the first cruise no less than 483 soundings were made, and on the second, 107 were taken, serial temperatures being observed and bottom-specimens obtained.

This work was admirably done and reflects great credit on the officers employed in it. Deep-sea soundings between Saint Thomas, West Indies, and Cape Henry, by way of Bermuda, have also been made by the United States steamer Gettysburg.

THE ARCTIC EXPEDITION.

The Arctic expedition in the Polaris was also conducted under the direction of the Navy Department; its history is too generally known to require further mention.

HYDROGRAPHY.

The United States Hydrographic Office, established by act of Congress in 1866, was but little more than a depot of purchased charts and books for the use of the Navy until 1870, from which time its steady advancement may be dated. With but a small force of draughtsmen and engravers, the greater portion of the work has devolved on officers of the Navy. It has been the endeavor of the Navy Department to foster and increase this office, so important to our commercial and naval marine, and to place it as quickly as possible on a footing with similar offices abroad. In the short interval since the establishment of this office, the work, as directed by law, of preparing sailing-direction and charts for the use of navigators, has been diligently carried on, the office having constructed, compiled, and issued since 1870 twenty-five distinct volumes of sailing-directions and 437 charts. Many of its publications are now viewed as standard works, and its charts have acquired reputation for their correctness and for the information which they contain. The yearly sales of charts and books to its agents in the ports of the United States have averaged 1,020 books for the purposes of navigation and 5,030 charts, besides those issued to naval vessels and exchanges with foreign governments for their latest publications. A system of exchanges of hydrographic information with the hydrographic offices of all maritime nations has been so perfected that, at the earliest possible moment after the appearance in any part of the world, and in any language, of information which may be useful in aiding the navigator to safely conduct the ship under his charge to its destination, it is pub-

lished and circulated wherever it may be of service. In this work tl hydrographic offices of Great Britain, France, Germany, Austria, Spai Portugal, Italy, Holland, Denmark, Belgium, Sweden, Russia, Brazi and Chili unite with our own. Since 1870, 449 hydrographic notices o changes or new discoveries in the earth's surface have been issued, a also 682 notices to mariners of alterations in artificial aids to navigation, such as light-houses and buoys, together with yearly-corrected lists of foreign lights. This work is done by Navy officers and requires the translation and careful examination of a mass of material brought by every mail.

It has been the object and endeavor of the Department to employ naval vessels as far as their duties would permit in surveys and in such explorations as might be beneficial to navigation and to science. To a certain extent it has been enabled to accomplish this without any additional appropriation. Extensive surveys, however, cannot be conducted without a small special appropriation.

The surveys performed under the auspices of the Hydrographic Office, though fewer in number than would have been made with the requested appropriations, have been important. The survey of the coasts of Lower California by the United States steamer Narraganset afforded the first accurate delineation of these coasts, rapidly growing in commercial importance; the preliminary charts published two years since by this office were at once copied and republished by both German and English authorities. With the exception of the small appropriation for commencing this survey, none other has been granted, excepting for the ordinary work of the office. By the cruise of the United States steamer Portsmouth, the list of doubtful dangers in the Pacific Ocean was somewhat reduced and valuable surveys were made of Washington, Christmas, Palmyra, and Fanning Islands. In the West Indies several rocks and shoals marked on the charts as doubtful were, by the assiduous searches made by the United States ships Kansas, Shawmut, Nipsic, Vandalia, &c., proved to have no existence, and others heretofore considered as doubtful were located and distinctly established.

The coast of Mexico from the Rio Grande to Laguna de Terminos has also been surveyed by the United States ships Wyoming and Fortune. In this survey, in addition to clearly laying down the coast-line and adjacent shoals, the approaches to the coast were carefully sounded out as far off shore as the 100-fathom line.

A very good, though not extensive, survey of the approaches to Montevideo has been made by the officers of the United States ship Wasp, and, by the officers of the United States ship Pensacola, surveys of harbors in the island of Hawaii. Occasional surveys have been made in the Pacific Ocean by the officers of the United States ship Ossipee, Jamestown, Richmond, and Omaha; in the East Indies b those of the United States ships Ashuelot and Iroquois; in the We *Indies* by the United States ship Canandaigua, and within the Rio de *Plata* by the United States ship Frolic.

The International Exhibition of 1875, at Santiago, Chili, awarded a first-class medal and diploma to the Hydrographic Office for the excellence of its publications, as also one to the hydrographer under whose superintendence these publications were issued.

HYDROGRAPHIC OFFICE.

Having called your attention to the creditable and satisfactory progress of the United States Hydrographic Office, to the ability and diligence of those connected with it, and to the amount of valuable practical work there accomplished within the term of my administration of the Navy Department, I must express the regret of the Department that even the very limited estimates for this work have been cut down; that no appropriation has been given for the continuance of the survey in the Pacific Ocean; and that this important office, with its valuable collection of charts, books, and plates, is still under the necessity of occupying a rented building, unsafe and inadequate to its requirements. Owing to the reduction of the appropriation for printing, this office is unable to issue some of its works necessary for commerce, and many of the charts of the coasts and gulf of Lower California, from the surveys made by the United States ship Narragansett, are as yet not engraved for want of the required appropriation. To these matters, so important to our maritime interests, I would especially ask the attention of Congress. During the past fiscal year the work under the Hydrographic Office for the determination of longitudes through the West India Islands by the electric telegraph, by Lieut. Comdr. F. M. Green, United States Navy, in the United States ship Gettysburgh, has been completed; the stations of Key West, Havana, Santiago de Cuba, Kingston, (Jamaica,) Aspinwall, Panama, San Juan, (Porto Rico,) Saint Thomas, Santa Cruz, Saint Pierre, (Martinique,) Bridgetown, (Barbados,) and Port Spain (Trinidad) were occupied, the measurements of longitudes being made from Key West, the position of which had been previously carefully determined by the United States Coast Survey. The most accurate methods known were used in determining these positions, the latitudes being fixed by the zenith telescope and the longitudes by the exchange of time-signals through the submarine-telegraph cables.

The success of this work has fully justified the expectations formed of it. For the first time the latitudes and longitudes of these islands, so much visited by vessels of all nations, and especially by those of the United States, have been fixed so decidely as not to admit of question. The most gratifying cordiality and assistance were extended to the officers engaged in this work, both by foreign authorities and by the officials of the telegraph companies. The observations are now being computed as rapidly as possible, and will be published as soon as completed. As the service will permit, vessels of the North Atlantic

squadron will be employed to carry the longitude chronometrically to the points intermediate between the several established stations.

The United States ship Gettysburg is at present employed in obtaining the required information for Parts II and III of the Description of the Coasts and Islands of the Mediterranean, and in making and correcting surveys where necessary. For a statement of the work of this office since my last report, I refer you to the report of the hydrographer to the chief of the Bureau of Navigation.

ORDNANCE.

When the war closed, the armament of the Navy was in a very confused and unsatisfactory state. The necessity of fitting out hurriedly irregular vessels had pressed into service all the obsolete armament on hand, while the war itself had developed the absolute necessity of efficient rifle armaments for any navy which was hereafter to contend on equal terms with the ships of hostile powers. Under these circumstances, notwithstanding the requirements of a rigorous economy in this expensive branch, and the desire to utilize the means on hand, which was proper and required after the drain of a great war, I have endeavored, as far as possible, to lay the foundation of a general system of progress in our ordnance, and to carry it as far forward as possible in its most pressing and least expensive particulars. During my term of office there has been introduced a uniform system of breech-loading small-arms, a supply of Gatling guns, with the carriages and equipment adapted to their use ashore and afloat.

A system of breech-loading howitzers has also been devised, and is now issued to the service. An entire rifle armament of 8-inch guns, with suitable mechanical carriages, has been placed on board the Trenton, the first in our Navy. Successful experiments have been made for the conversion of our supply of Parrott rifles into breech-loaders, as the only means of arming our small vessels, of little beam, with guns efficient in modern naval warfare; and many other experiments have been made in this direction, which have demonstrated the possibility of most favorable results, if properly pursued.

The torpedo-school has been, under the able officers and professors charged with its direction, a most valuable school for practice and instruction in what I believe to be a most useful and inexpensive adjunct to our means of offensive and defensive warfare, and destined to play a great part in all future naval wars.

The subject of gunpowder has also received much attention, and successful experiments have been made to determine the necessary elements of its best manufacture, to the end that we may have it of uniform and safe quality. Most of the accidents which befell our rifled cannon were due to the unsuitable powder which, under the pressure of war, we were forced to procure from all sources, without time for the experimental tests necessary to determine the quality proper for these guns, then newly introduced.

NAVY-YARDS.

I beg to renew the recommendations made in my successive annual reports in reference to our navy-yards and stations, and to urge that their resources may be increased, and that sufficient appropriations may be made to keep them in thorough repair, and ready for any emergency which may arise.

The sum of $760,000 for maintenance and $500,000 for repairs and preservation of all the navy-yards and stations was appropriated for the fiscal year ending June 30, 1876. This amount was carefully allotted to the different yards and stations according to their relative importance and necessities, and has been judiciously expended.

At the Boston, New York, Norfolk, and Pensacola navy-yards little has been accomplished beyond keeping the docks, workshops, and piers in a fair state of repair.

During the spring and summer of the present fiscal year, thorough repairs should be made at the navy-yards named; but the appropriation is so inadequate for the amount of work necessary to be done, that only minor reparations can be attended to, and, consequently, largely increased appropriations will be indispensable for the fiscal year ending June 30, 1878.

New London, Conn.—At the naval station, New London, there has been expended during the last fiscal year, for maintenance of station, for grading the site, for completing store-house, repairs to wharf, and for the erection of stables, blacksmith-shop, and watch-house, the sum of $55,717.07.

League Island, Pa.—By authority of an act of Congress, the old navy-yard at Philadelphia was sold at public auction on the 2d day of December, 1875. Prior to the sale, arrangements had been made for the removal of all material, stores, and other public property from the navy-yard to League Island. Temporary wooden buildings had been provided for the reception of the stores, and the Philadelphia navy-yard was delivered to the purchaser upon the day specified in the terms of sale.

Since the removal of the Philadelphia navy-yard to League Island much work has been done in deepening the back channel and filling-in, building foundations, the superstructures of which will be partially, and in some instances wholly, erected from old material removed from the Philadelphia navy-yard; and there are now in process of construction, under contract, extension of main wharf, foot of Broad street; causeway across back channel; storage and mold loft; extension of wharf No. 2; and completion of steam-engineering building; and by Bureau of Yards and Docks, temporary machine-shop for Bureau of Steam-Engineering; temporary blacksmith-shop for Bureau of Construction and Repair; foundations for officers' quarters nearly finished, and the buildings themselves will be commenced in the spring.

At Mare Island the buildings have been kept in repair, and the

appropriation for the stone dry-dock has been advantageously expended. The sum appropriated for the fiscal year ending June 30, 1877, for the continuance of the work upon the dry-dock, is merely sufficient to prevent deterioration of work already accomplished, to keep in repair the coffer-dam, and to have a small reserve in hand in case of any unforeseen accident.

The report of the board of five commissioned officers, ordered by Congress "to examine fully and determine whether any of the navy-yards can be dispensed with," &c., will be forwarded when received.

I beg to call attention to the estimates of the Bureau of Yards and Docks, and to say that in consequence of the insufficient appropriations of the past few years the sums asked for, although largely in excess of the appropriation for the last and present fiscal years, are indeed less than true economy and the needs of the service demand.

CENTENNIAL EXHIBITION.

The naval exhibits at the United States Centennial Exhibition, which opened May 10 and closed November 10, were under charge of Rear-Admiral Thornton A. Jenkins, assisted by some other officers of the Navy, detailed in connection with the different bureaus represented there. For a better understanding of the extent of the exhibit I refer you to the synopsis of the classes of articles displayed, which will be found in the appendix, and to the following extracts from Rear-Admiral Jenkins's report to the Department:

Without presuming to pass judgment upon the professional or popular estimate as mere exhibits of the articles and objects arranged in the naval section of the Government building, I may be permitted to say that the opinions of all classes of persons, so far as I have heard, have been most favorable, and greatly to the credit of the Naval Department and naval service of the country.

On the 5th of May (five days in advance of the formal opening of the Exhibition) the exhibits in the naval section were arranged and in the main labeled in English, French, and German, showing sections, classes, numbers, names, and description of each object. A catalogue, embracing every object on exhibition, was prepared and widely distributed among the different foreign commissioners and the representatives of the different States and Territories of the United States.

A few weeks prior to the close of the Exhibition, the very unique and highly-interesting exhibits presented by His Majesty the King of Siam to the United States through Rear-Admiral Reynolds, (commanding the Asiatic station,) and the Navy Department, were received at the Government building, and within a week these curious, wonder-inspiring articles were all arranged in cases and on tables, all properly labeled, and a catalogue made out.

I trust I may be permitted to say, in conclusion, that, whatever may have been the misgivings as to probable success, in the outset of the undertaking, the naval exhibit at the International Centennial Exhibit of 1876 has been most creditable to the Navy.

COALING-STATION, SAINT MARY'S RIVER, MARYLAND.

On the 13th of April, 1874, the House of Representatives passed a resolution directing me to appoint a board of naval officers to inquire

as to the expediency of establishing, at the harbor of the Saint Mary's River, Maryland, a naval coaling-station. On the 14th of January, 1875, I submitted to the House of Representatives the report of said board of naval officers for the consideration and action of Congress. I now have the honor to call, through you, the attention of Congress to the same subject for such action as they may think fit. If the coaling-station is to be established, an appropriation of $10,000 will be needed.

NAVY PENSION-FUND.

The following is a statement of the number and yearly amount of pensions of the Navy on the rolls June 30, 1876, and the amount which was paid during that fiscal year:

	On roll June 30, 1876.	Annual amount of roll.	Amount paid for pensions during fiscal year ended June 30, 1876.
Navy invalids	1,643	$183,716	$187,132 72
Navy widows and others	1,744	287,726	309,338 39
Total	3,387	471,442	496,471 11

ESTIMATES AND EXPENDITURES.

On the 1st of July, 1875, the amount of the appropriations applicable to the fiscal year ending June 30, 1876, was $18,301,731.27. The actual expenditure of these appropriations during that period, namely, from July 1, 1875, to June 30, 1876, was $17,937,354.72, or about $364,376.55 less than the whole amount.

The appropriations available for the present year, commencing July 1, 1876, are, in the aggregate, $12,961,790.90. The whole amount of these appropriations drawn, up to the 1st of the current month, was $7,879,757.19. From this may be deducted the amount in the hands of the paymasters and agents of the Government and the amounts refunded during the period above mentioned, which will reduce the amount of these appropriations actually expended since the commencement of this fiscal year, and during the working-months, to less than $7,000,000. A statement of the monthly expenditure of these appropriations since July 1, 1875, is hereto annexed and will make part of this report. The estimates for the general maintenance of the Navy for the next year are as follows:

Estimates.

Pay of officers and seamen of the Navy	$7,300,000 00
Pay of civil establishment in navy-yards	205,922 00
Ordnance and Torpedo Corps	445,575 00
Coal, hemp, and equipments	1,250,000 00
Navigation and navigation supplies	135,136 44
Hydrographic work	89,800 00

Naval Observatory, Nautical Almanac, &c	$54,200 00
Repairs and preservation of vessels, &c	3,300,000 00
Steam-machinery, tools, &c	2,000,000 00
Provisions and clothing	1,403,721 85
Repairs of hospitals and laboratories	40,000 00
Surgeons' necessaries	40,000 00
Contingent expenses of various departments and bureaus	351,000 00
Naval Academy	199,262 40
Support of Marine Corps	905,769 00
Naval Asylum, Philadelphia	63,597 00
Maintenance of yards and docks	862,029 00
	18,646,012 69

The amount estimated for new buildings and the repairs and improvements necessary at the various navy-yards, stations, and hospitals is $2,908,596.

There is also submitted by the Bureau of Ordnance an estimate for the sum of $775,500, deemed necessary to provide the proper armament for our large iron-clads and other ships now being fitted for sea. This shows an aggregate sum of about $300,000 less than the amount which was asked for last year for like purposes.

How small these appropriations of less than $13,000,000 really are for the carrying on of our naval service at this time will be seen by comparing them with the naval appropriations made in 1856, ($15,701,968.49;) in 1857, ($14,125,434.55;) in 1858, ($13,109,359.36,) and in 1859, ($15,987,079.49,) a period when the Navy consisted of only about 50 sailing-vessels, with a dozen side-wheel steamers, and about the same number of screw-vessels, against the 23 sailing-ships and 123 steamers now on the register; when our motive-power was the free wind of heaven, and our ships were not supplied with expensive steam-machinery of great weight, occupying great space on shipboard, and required neither the large supply of fuel, appliances, and material necessary to the use of this machinery, nor the numerous body of officers and men employed to prepare, operate, and preserve it; when armored ships were unknown, and the armaments of our most powerful cruisers consisted principally of 32 and 64-pounders, against 200-pound rifles and 15-inch guns of these times; when the materials and supplies for naval use were comparatively cheap; when skilled labor was not half its present price, and its working-hours had not been reduced by one-fifth; and when the pay-roll of the Navy had not assumed half its present proportions, and contained but few invalids and no reserve-list.

But however small the appropriations may be, it is nevertheless the duty of the Department to reduce the expenses of the service upon the same scale, as far as it can be done within the provisions of existing laws. This it has endeavored to do, though it is not often economical nor always possible, to confine the expenses of a military establishment within fixed and unyielding limits. This is especially the case with the naval service, scattered all over the globe, often at the mercy of the *natural* elements, and always liable to international conditions, which

ıeither the Department nor the Government can foresee; for which they re not responsible, and which they can neither direct nor control. ı endeavoring to adapt itself to this necessity, the Department has een crippled in carrying on much important work which was already ı progress, and which is rendered more expensive by this delay; and has also been constrained to put in force upon the service generally the rovisions of law which authorized it to place officers on "furlough-pay." he power of Congress to limit the appropriations for "pay" to the equirements of this provision of existing law, and the power and duty f the Department, when so limited, to put the provision in force, will ıardly be questioned by any one who can bring to the consideration ıf the subject an unbiased legal judgment.

That the intent of Congress was so to limit the appropriations is unquestionable, in view of their statements, debates, and actions at the time, and of the fact that they were fully informed, that the appropriations made upon this principle would impose upon the Department the duty of carrying out the spirit of their legislation, as far as it could be done under the law as it stood on the statute-book, rather than to make a deficiency by disregarding their action and its intent. The "pay" provided by these provisions, however, was not adapted to the circumstances and necessities of the present times, and they had grown obsolete in practice, except for the purpose of punishment; and whatever was their original intent, they cannot now be enforced upon the service as a whole without great inconvenience and privation to officers and their families, entailing, in many instances, personal hardship which, in the case of the deserving, amounts almost to absolute injustice.

You are fully aware how disagreeable this duty was to the Department; but you understood, also, how it had no alternative but to discharge it. Burdensome as its effect has been to the naval service, I am gratified to be able to say that it has been received by the officers generally with dignity and courage. There has been some fault-finding and some foolish criticism; but the fault-finding, as far as I am informed, has been confined to those who have been least affected, and who, in the present as in the past, have the least cause to complain of the favor of the Government or the action of the Department. Those who are charged with the burdens of official duty must expect always to meet the criticism of that class, who, without consideration or responsibility themselves, are ever ready to question the motives and actions of others.

After careful consideration of this subject, being convinced that Congress, when they fully understand it, will have no real desire to withhold from any branch of the service the pay which would accrue to it under the ordinary operations of the laws and customs governing the action of the Department, and will not wish to deprive well-deserving officers, whose lives are consecrated to their country's service, and to whom no personal fault is imputed, of the means for the proper support and education of their families, I have, besides the ordinary

estimates for the next fiscal year, submitted an additional one for tl sum of $1,550,000, to supply the inevitable deficiency in the "pay appropriation, and to enable the Department to rescind its order placin all unemployed officers on "furlough-pay," and to make up to those wh have been or may be so reduced, without fault on their part, the amoun of pay which they would otherwise have received. Congress will b earnestly pressed to make this provision, and if they do so, the Depar ment will have great gratification in carrying it out; otherwise the ser ice and the Department will have no alternative but to submit to tl deficiency and the reduction which it entails.

In conclusion, I take this last opportunity to again express my sen of the many and heavy obligations which I am under to the experience officers and clerks employed in the Department and elsewhere in i service, and to the officers of the Navy as a class, for their consta assistance in the discharge of the many difficult and responsible duti which have devolved upon me during my term of office. If anythi of good has been accomplished, it is to them that the country is large indebted.

GEO. M. ROBESON,
Secretary of the Navy.

The PRESIDENT.

SUPPLEMENT.

Exhibit of expenditure chargeable to Navy appropriations.

Date.	Drawn.	Refunded.	Expended.
Appropriations for 1875–'76.			
1875.			
July	$3, 064, 503 07	$3 76	$3, 064, 499 31
August	2, 889, 458 45	11, 000 00	2, 878, 458 45
September	2, 242, 056 25	14, 166 54	2, 227, 899 71
October	2, 724, 643 59	482, 943 47	2, 241, 700 12
November	2, 812, 384 78	45, 324 87	2, 767, 049 91
December	1, 728, 392 68	714, 413 68	1, 013 979 00
1876.			
January	1, 178, 999 43	523, 956 42	655, 043 01
February	1, 570, 730 39	555, 918 46	1, 014, 811 93
March	968, 096 39	214, 516 10	753, 580 29
April	763, 154 00	114, 254 31	648, 899 69
May	749, 399 02	525, 437 59	223, 961 43
June	680, 738 92	233, 257 05	447, 481 87
Total	21, 372, 556 97	3, 435, 202 25	17, 937, 354 72
Appropriations for 1876–'77.			
1876.			
July	2, 438, 048 84	3, 260 50	2, 434, 788 34
August	1, 661, 681 14	20, 425 43	1, 641, 255 71
September	2, 304, 514 52	25, 128 75	2, 279, 385 77
October	1, 475, 512 69	111, 789 26	1, 363, 723 43
Total	7, 879, 757 19	160, 603 94	7, 719, 153 25

1876. August 31.	Appropriation-warrant No. 290, 1877	$12, 688, 817 90
	Appropriation-warrant No. 291, 1877	220, 000 00
	Naval Asylum, Philadelphia, Pa., 1877	52, 973 00
		12, 961, 790 90

STATEMENT OF CHARACTER AND CONDITION OF NAVY VESSELS 1869 TO 1876.

NIAGARA.—Auxiliary steam-power. In 1870 commenced repairs with a view to making this vessel an efficient war-vessel, by changing the line of gun and berth decks, iron-plating her sides near the water-line, and making new boilers and machinery. It was ascertained, however, that the cost of these alterations and repairs would be over one million dollars, and that a new vessel could be built for less money which would be in all respects superior to her when completed. Her repairs were, therefore, stopped, and she remains in ordinary.

CONNECTICUT.—Built of white oak, but never launched. At present she is somewhat rotten, but could be made serviceable for a year's cruise in six months, although at great cost.

WA.—White-oak vessel. Was tested as to speed and found very fast. She is now quite rotten, and will have to be repaired before going to sea.

JAVA.—Built of white oak, and in same condition as Connecticut.

NEW YORK.—Frame of live-oak; of good design and in good pı ervation.

PENNSYLVANIA.—Built of white oak, and in same condition as Connecticut.

SUSQUEHANNA.—Repairs commenced with a view to changing from a side-wheel to a screw ship, but the cost, after taking off rot wood, was estimated to be above the amount required for the build of a vessel of a superior power and of modern design; consequen the repairs were stopped and the vessel was placed in ordinary.

COLORADO.—Auxiliary steam-power. In 1869 in ordinary. In 18 '72, flag-ship on Asiatic station. In 1873–'74, laid up. In 1875, fl ship on North Atlantic station. In 1876, school and practice sl Requires repairs, but is in good condition for one year's service.

FRANKLIN.—Auxiliary steam-power. In 1871,'72, and '73, flag-s on European station. In 1874–'75, laid up. In 1876, flag-ship on Eu pean station. Has been repaired several times since 1869.

MINNESOTA.—Auxiliary steam-power. In 1870, 1871, 1872, 1873, 18 and 1875, repairing. In 1876, put in commission as practice-ship.] pairs have been very costly.

WABASH.—Auxiliary steam-power. In 1871, extensively repair In 1872, put in commission as flag-ship on European station. In 187 '75, laid up. In 1876, practice-ship. Has been extensively repaired great cost since 1869.

FLORIDA.—Live-oak ship. Has been tested and found to be ve fast. Has done no service since, and will have to be repaired befc going to sea.

TENNESSEE.—Live-oak frame. In 1869, was found to need repai and that her steam-power could be much improved. The repairs, whi were found to be very expensive, were made and machinery improve In 1875, was sent to sea as flag-ship on the Asiatic station, and h proved to be a very superior vessel.

ANTIETAM.—In 1869, on the stocks, and about two-thirds finishe Previous to moving the navy-yard to League Island, she was offered f sale at auction, but the price offered was considered inadequate, and s was calked, launched, and fitted for equipment store-ship. Is built white oak, and her timbers are a little rotten. Can be used as a sto ship, but is not considered worth putting engines in.

DELAWARE.—In 1869–'70, was flag-ship on Asiatic station, and up returning to the United States, in 1870, was found to be very rotten, a the estimated cost of repairs to her was considered above the cost building a new and superior vessel. She has been offered for sale auction, but the sum offered was considered inadequate, and she remai in ordinary.

LANCASTER.—Auxiliary steam-power. Was repaired in 1869–'70, a during the latter year was sent to the South Atlantic, remaining on th duty until the present year, when she returned to the United State Upon her arrival the usual survey was made, when the cost of repai as estimated, was nearly a million of dollars. A new vessel, of mode design, could be built for less money.

BROOKLYN.—Auxiliary steam-power. In 1869, was laid up. Repair in 1870. Was at sea during 1871 and 1872; returned in 1873. Repair and sent to sea, North Atlantic fleet, 1874. In 1875, was in the Sou Atlantic fleet, returning in 1876. Was put in ordinary, and requir repairs.

PENSACOLA.—Auxiliary steam-power. In 1869, was flag-ship of Nor

Pacific squadron. Was repaired in 1870 and 1871, at a cost of over one million dollars, and has since that time been flag-ship in South and North Pacific squadrons.

HARTFORD.—Auxiliary steam-power. In 1869, was laid up, and in 1870–'71–'72 was extensively repaired. Since that time has been flag-ship of Asiatic and North Atlantic squadrons.

RICHMOND.—Auxiliary steam-power. In 1869, was fitting out and was put in commission in 1870. Has been in commission ever since that time, although at times under repair.

CONGRESS.—Built of white oak. In 1869 laid up. Was put in commission in 1870, and joined the North Atlantic squadron. Was on special service in 1872, and in 1873, '74, and '75 was in European squadron. Returned in 1876. Has been put out of commission and surveyed. Cost of repairs is considered too large for a white-oak vessel of her value when completed; consequently will be sold or broken up.

SEVERN.—White-oak built vessel. In 1869, laid up. In 1870 and 1871, was flag-ship of North Atlantic fleet, and since that time has not been in service. Upon survey she was found to be very rotten and unfit for repair. She has been offered for sale at auction, but the price bid was considered inadequate.

WORCESTER.—Built of white oak. In ordinary in 1869. Was completed in 1871, and was flag-ship of North Atlantic fleet in 1872, '73, '74, and '75. Is now used as a receiving-ship. Is considered too rotten for repair.

POWHATAN.—Live-oak. In 1869, was flag-ship of South Pacific squadron. Laid up in 1870 and in 1871–'72. Put in commission in 1872 on special service, and has been so employed up to the present time.

ALASKA.—Live-oak. Completed in 1869. Was put in commission in 1870, and joined Asiatic squadron. In 1873, was repaired and joined the European station, returning for repairs 1876.

BENICIA.—Built of live-oak. Completed in 1869, and joined the Asiatic fleet in 1870. Remained on that station until 1873, when she was employed in the North Pacific fleet until 1875, and then put out of commission for repair.

OMAHA.—Built of live-oak. Completed in 1872 and joined the South Pacific squadron the same year. Has been employed in that squadron until the present time.

PLYMOUTH.—Built of live-oak. Repaired in 1869. Joined European fleet in 1871. Returned in 1873 and was laid up for repair. Repaired in 1874, and has been up to the present time employed in North Atlantic fleet.

LACKAWANNA.—Built of live-oak. In 1869, was employed in North Pacific fleet. Repaired in 1870, '71, and '72, and in 1873, '74, and '75 was in the Asiatic squadron. In 1876, joined the North Pacific fleet.

TICONDEROGA.—Live-oak built. In 1869, was in the European squadron, and was very extensively repaired in 1870 and '71. Joined the South Atlantic fleet in 1872 and the North Atlantic fleet in 1874. Returned in 1875, and has since then been laid up for repair.

MONONGAHELA.—Live-oak built. In 1869 was in ordinary. Was repaired at very great cost and joined the South Atlantic fleet in 1874. Returned and put in commission as practice-vessel in 1876.

SHENANDOAH.—Live-oak built. Returned from a cruise in 1869. Was thoroughly repaired in 1870 and joined the European fleet. Remained on that station until 1874, when she was laid up for repair.

JUNIATA.—Live-oak ship. Repairing in 1869. Joined European fleet in 1871, remaining on that duty until 1873, when she was ordered to look

for the Polaris. Sent to the European fleet in 1874. Returned in 1876 and was laid up for repair.

OSSIPEE.—Live-oak ship. In North Pacific squadron in 1869, '70, '71 and '72. Employed in that and on South Pacific station. Repaired in 1873 and 1874. Joined the North Atlantic station, where she remains at the present time.

QUINNEBAUG.—White-oak ship. In South Atlantic squadron 1869 and '70, and in 1871 her repairs were commenced. The repairs were found to be so extensive and costly that it was deemed to be for the interest of the Government to change the white-oak frame for live-oak, and thus increase her capacity and speed. This was done, and although the repairs have not been fully completed, she can be made ready for sea in a short time.

SWATARA.—White-oak ship. In European squadron in 1869, repaired in 1870, and in North Atlantic fleet. Extensive repairs were found to be required, and in 1872 they were commenced. The needed repairs were found to be very extensive, and it was considered to be to the interest of the Government that her frame should be made of live-oak timber instead of white oak, insuring greater durability. It became necessary in carrying out this idea to increase her capacity, which was done sufficiently to increase her speed and fighting-power. She was completed and sent on special service with the expedition to witness the transit of Venus in 1874, and since that time has been attached to the North Atlantic fleet. The highest expectations of her good qualities have been realized, and she has proved to be one of the best vessels of her class in the Navy.

GALENA.—Repairs commenced in 1870; was found in the same condition as the Swatara, and the same changes were made. Her repairs are not yet completed, but she could be made ready for sea in three months.

VANDALIA.—Sailing-ship. Was receiving-ship in 1869 to 1871. Was converted into a steamship of the Swatara class, and put in commission in 1875. The reports speak of her excellent qualities as a working and fighting vessel.

MARION.—Was practice sailing-ship at Naval Academy in 1869, 1870, and 1871. Was converted into a screw-steamship of the Swatara class, and put in commission in 1875, and has proved to be an excellent man-of-war.

IROQUOIS.—Live-oak built. In Asiatic squadron 1869 and 1870. Repaired in 1871. Joined the Asiatic squadron 1873. Was laid up in 1874 for repairs.

KEARSARGE.—Live-oak ship. In 1869 and 1870 was in the South Pacific fleet. Was laid up in 1871. Repaired in 1872 and '73, very extensively and at great cost. Joined the Asiatic squadron in 1874, and is now on that station.

WACHUSETT.—Live-oak ship. Laid up for repairs in 1869. Repaired in 1870 and '71, and joined the European fleet in 1872. Transferred to North Atlantic fleet in 1873, and was laid up for repair in 1874.

MOHICAN.—Partly white oak, from repairs made in 1864. Joined North Pacific fleet in 1870. Repairing in 1873, and repairs not completed. Her capacity has been increased, and a live-oak frame has been substituted for partly white-oak. When completed she will be of the same class and dimensions as the Marion.

TUSCARORA.—Live-oak ship. In 1869 was in the South Pacific fleet and transferred to the North Pacific squadron in 1870. Laid up for repairs in 1871. Repaired in 1872 and sent on surveying duty in 187-

Was transferred to North Pacific fleet in 1875, where she is now on duty.

WYOMING.—Live-oak ship. Laid up for repair early in 1869. Repaired in 1870, and put in commission for special duty in 1871. Joined the North Atlantic fleet in 1872. Laid up for repairs in 1874. Has been since repaired, and is now ready for service.

NARRAGANSETT.—Live-oak ship. Repairing in 1869. Put in commission and joined the North Pacific squadron in 1871. In 1873, '74, and '75 was employed in deep-sea soundings. Laid up in 1876 for repair.

ASHUELOT.—Has been attached to the Asiatic squadron since 1869. During that time has been extensively repaired.

MONOCACY.—Iron-hull side-wheel double-ender. Has been attached to Asiatic squadron since 1869. Has been repaired several times during that period.

KANSAS.—White-oak ship. In South Atlantic squadron in 1869. Repaired in 1870. In 1871, '72, and '73 was employed in surveying canal-route to the Pacific via Nicaragua and Tehuantepec, and joined North Atlantic fleet in 1874. In 1876 was laid up for repair. Not considered worth repairing.

NIPSIC.—White-oak ship. In North Atlantic squadron in 1869. In 1870 and '71 was employed in the Darien surveying expedition for canal-route to Pacific via Isthmus of Darien. In 1872 and '73 was employed in North Atlantic squadron, and in 1874 laid up for repairs. Repairs commenced in 1875, which were to be so extensive and costly that it was considered to be to the interest of the Government to change her frame from white oak to live-oak. Her capacity was increased and model improved, and although the repairs are not yet completed she can be made ready for sea in four months, and will then be of the Adams class with all of the modern improvements.

SACO.—White-oak ship. Laid up for repairs in 1869. Repaired in 1870, and joined European fleet 1871. Transferred to Asiatic squadron in 1872, and laid up for repairs in 1876.

NYACK.—White-oak ship. In South Pacific squadron in 1869, and in 1871 laid up for repairs, which are required to be very extensive.

SHAWMUT.—White-oak ship. Laid up for repairs in 1869. Repaired in 1870 and 1871. Joined the North Atlantic squadron, and is still in service there.

YANTIC.—White-oak ship. In 1869 was in North Atlantic squadron, and in 1871-'72 was thoroughly repaired and sent to the Asiatic station. She is still on that station, but has lately been reported unseaworthy, and will require costly repairs, if found worthy of them.

MICHIGAN.—Iron side-wheel vessel, in good condition and doing special duty on Lake Erie.

FROLIC.—Iron side-wheel vessel. In 1869 used as a dispatch-vessel, European squadron. Thoroughly repaired in 1871, and used as post-admiral's flag-ship. In 1872 doing duty on special service. Returned in 1873, was post-admiral's flag-ship and laid up during 1874, and in 1875 joined the South Atlantic squadron. Is still on that station and in good condition.

GETTYSBURG.—Iron side-wheel vessel. In North Atlantic squadron in 1869. Repaired in 1870 and laid up in ordinary. On special service in 1872. Thoroughly repaired in 1873, and put on special duty in 1875. Now employed on surveying-duty. Is in good order.

TALLAPOOSA.—White-oak vessel. Side-wheels. In 1869 was put on

special duty carrying materials and stores to stations. In 1874 w thoroughly repaired, and has been since on special duty as before.

WASP.—Iron side-wheel vessel. In 1869 was in South Atlantic flee where she was employed until condemned in 1875, and has since be sold.

PALOS.—Iron tug. Laid up in 1869. Repaired in 1870 and joine Asiatic fleet as tender, where she is employed and in good condition.

NEW HAMPSHIRE.—Live-oak sailing-ship, (74.) In 1869, receivin ship. In 1876, sent to Port Royal as store-ship. In good condition, b can only be of service as store-ship.

NEW ORLEANS.—White-oak ship, (74.) On the stocks at Sacke Harbor, New York. Rotten and unfit for repairs or use.

OHIO.—Live-oak sailing-ship, (74.) Used as a receiving-ship unt 1875, when she was placed in ordinary, and must be considered of n further use to the Government.

VERMONT.—Live-oak sailing-ship, (74.) Was used as receiving-shi until 1875, when she was laid up in ordinary, and is considered of n further use to the Government.

CONSTELLATION.—Live-oak sailing-frigate. Laid up in ordinary i 1869. Repaired in 1870 and 1871. In use in 1872 as practice-ship fo gunnery. In 1873 and 1874, in commission as practice-ship for nava cadets, and in 1876 laid up in ordinary.

CONSTITUTION.—Live-oak sailing-frigate. In 1869, in commission i connection with Naval Academy. Laid up in ordinary in 1872, an since has been under repairs for practice-ship, which are nearly com pleted.

INDEPENDENCE.—Receiving-ship. Live-oak sailing razee-frigate Rotten, and of no service except for the purpose used.

MACEDONIAN.—Live-oak sailing-frigate. In commission as cade practice-ship in 1869 and 1870, and in 1871 repaired and put in ordinary Has since been sold.

POTOMAC.—Live-oak sailing-frigate. Has been used as receiving ship since 1869. Is now very rotten and not worth repairing. Will b offered for sale when there is a prospect of obtaining a fair price.

SABINE.—Live-oak sailing-frigate. In 1869, laid up for repair. Re paired in 1870 and sent on special service with midshipmen for practice Repaired in 1871 and 1872 and put in commission as receiving-ship Laid up in ordinary 1876. Has no value of importance as a fighting vessel, and will be sold when the market will warrant obtaining a fai price.

SANTEE.—Live-oak sailing-frigate. School-ship in 1869, and employed as practice and gunnery ship at Naval Academy since that time. She is in fair condition, and is useful for the purpose for which she is em ployed.

SAVANNAH.—Live-oak sailing-frigate. Laid up in ordinary in 1869 Employed as practice-ship in 1870, and since that time has been laid up. Not of any service except as school or practice ship.

ST. LAWRENCE.—Live-oak sailing-frigate. Used as marine barracks from 1867 to 1875, when she was no longer, through deterioration, fi for that service, and has been sold.

PORTSMOUTH.—Live-oak sailing-sloop. Repaired in 1869 and sent t South Atlantic squadron in 1871. Was employed in 1873 on surveyin duty, and in 1874 and 1875 was employed in North Pacific squadron Has been employed as a training-ship for boys since that time. She i in good condition.

CYANE.—Live-oak sailing-sloop of old type. In 1869, was used a

store-ship, Pacific squadron, and was employed in that service until laid up in 1872. Not considered worth repairing.

JAMESTOWN.—Live-oak sailing-sloop. In 1869, employed in North Pacific squadron, continuing on duty until laid up for repairs in 1871. In 1875, was thoroughly repaired and turned over to the city of San Francisco for a training-school, as directed by act of Congress.

SARATOGA.—Live-oak sailing-sloop. In 1869, used as a school for naval apprentices. Repaired in 1870, and laid up in ordinary. Put in commission as ordnance practice-ship in 1874, and laid up as unfit for repairs in 1876.

ST. LOUIS.—Live-oak sailing-sloop. Old type. Used as officers' quarters at League Island from 1869 to 1875, and since that time as store-ship for the Bureau of Provisions and Clothing. Considered totally unfit for repairs.

ST. MARY'S.—Live-oak sailing-sloop. In 1869, was laid up in ordinary. Repaired in 1870, and joined the Pacific squadron, and returning was laid up for repairs. Repaired in 1875, and turned over to the city authorities of New York for State Marine School, as per act of Congress.

DALE.—Live-oak sailing-sloop. In 1869, employed as practice-ship at Naval Academy, and has remained in that service ever since. Is in good condition.

PAWNEE.—Partly live-oak ship. In South Atlantic squadron in 1869. Returned for repairs in 1870. The cost of repairing her machinery having been found to be too great, it was removed, and she was sent to Pensacola, as store-ship, in 1872. Since that time she has been used as a store-ship at Key West and at Port Royal. Her hull is very rotten, and considered not worth repairing.

GUARD.—White-oak sailing-ship. Employed as store-ship in 1869. In 1870 and 1871, employed in the Darien expedition. Laid up in 1872, and sent with goods for the Vienna Exhibition in 1873. Returned in 1874, and was laid up in ordinary. Will require repairs before going to sea. Serviceable only as store-ship.

ONWARD.—White-oak sailing-ship. In service as store-ship in 1869, and has been used for that duty in South-Pacific squadron up to the present time. Is only useful for that service.

RELIEF.—Live-oak sailing store-ship. Laid up in ordinary in 1869, '70, '71, and '72, and used as receiving-ship since that time. Is now in fair condition, but of no value as a fighting-vessel.

SUPPLY.—White-oak sailing-vessel. Laid up in ordinary in 1869, and made a voyage, taking stores to the Vienna Exhibition in 1873. Since that time has been repaired and was sent, in 1875, to Europe for goods for the Centennial Exhibition, bringing to Washington, on her return in 1876, the naval monument. At the present time is laid up in ordinary. Is only serviceable as a store-ship.

NEW VESSELS ADDED TO THE NAVY SINCE 1869.

TRENTON.—Second-rate. Built of live oak, with full steam and fighting power. Of new type for flag-ships. Is being completed and will soon go into commission.

ADAMS.—Third-rate. Built of live oak, full steam-power. In commission, and has shown excellent qualities as a man-of-war of her class.

ENTERPRISE.—Third-rate. Built of live oak, full steam-power. Will be put in commission as soon as a crew can be obtained.

ESSEX.—Third-rate. Built of live oak, with full steam-power. commission. Report speaks of her as satisfactory in every respect.

ALLIANCE.—Third-rate. Built of live oak, with full steam-pov Will be put into commission as soon as a crew can be obtained.

ALERT.—Third-rate. Built of iron, with full steam-power. In c mission, and of good report.

HURON.—Third-rate. Built of iron, with full steam-power. In c mission, and of good report.

RANGER.—Third-rate. Built of iron, with full steam-power. Orde into commission.

ALARM.—Torpedo-boat. Built of iron, bracket-system, and fit with a Fowler wheel. Light armor-plated. Double bottom. Car one 15-inch gun in addition to torpedo-fixtures. Is in good order.

INTREPID.—Built of iron, double bottom. Armor-plated on sides five (5) inches of iron, and two (2) inches over the deck. Arranged forward under-water torpedo. Machinery all under water-line. Is good order.

PURCHASED VESSELS.

DESPATCH.—Purchased for quick-dispatch duty. Is very fast and good condition. Has been usefully employed since her purchase.

RIO BRAVO.—Purchased for special service on Rio Bravo River a very light-draught boat. Is now on that duty.

GENERAL OPERATIONS OF THE FLEETS.

European Station.—The Franklin remained at Lisbon until Februa 19, on which day she sailed for Southampton, thence to Cherbourg, take on board the works of art of our citizens in Europe intended the Centennial Exhibition. Having received the articles, she return to Gibraltar, where she was met by the Supply, to which the works art were transferred for transportation to Philadelphia. From G raltar the Franklin returned to Villefranche.

Serious disturbances having occurred at Salonica, Turkey, placi the lives of American citizens in jeopardy, Rear-Admiral Worden l in the Franklin on May 16 for that point. So large a vessel as t Franklin not being allowed to pass the Dardanelles, Rear-Admiral W den himself visited Constantinople and conferred with the United Sta minister, having also an interview with the Grand Vizier and cabi ministers of the Porte. The presence of the Franklin not being fou necessary at Salonica, she visited Beirut, and returned to Villefranc in July. The Marion arriving shortly afterwards from the Unit States, she was sent to the Dardanelles, and the proper permit bei given, she passed the straits and anchored off Constantinople. S remained there a few days only, and returned to Villefranche, taki the place of the flag-ship, which had received orders for home. T transfer was made September 14, and the Franklin sailed the same d for the United States.

Asiatic Station.—Nothing unusual has occurred within the limits the Asiatic station requiring any other service than is common cruisers in time of peace. The Kearsarge was sent especially to Mar *in July to* inquire into the detention by the Spanish authorities of

American merchant-vessel—the Fanny Hare—and to take all proper measures to secure her release. The matter was investigated and the vessel was allowed to pursue her course.

The Ashuelot made an interesting visit to Bangkok, Siam, arriving there in April and leaving in May, during which there was a pleasant interchange of courtesies with the officials of the kingdom. She received on board the contributions of the Siamese government to the Centennial Exhibition and conveyed them to Hong-Kong, whence they were shipped by steamer to San Francisco and by rail to Philadelphia, arriving in season to be displayed with other naval exhibits.

Rear-Admiral Reynolds has visited in his flag-ship the chief ports of Japan and China, and given his personal attention to the interests of our countrymen there. He left New Chwang, September 22 for the mouth of the Peiho, where he leaves the Tennessee and with his staff visits Peking. The greater part of the force will be stationed between Shanghai and Tient-sin until matters in that quarter are in a more satisfactory condition.

North Pacific Station.—At the date of the last annual report of the Department, Rear-Admiral Almy was visiting the ports on the west coast of Mexico in the Pensacola. Having spent a fortnight at Acapulco, he sailed in the Pensacola for San Francisco December 27, and arrived January 26. Having been detained at the navy-yard several months, she sailed from San Francisco, bearing the flag of Rear-Admiral Murray, for the coasts of Mexico and Central America and the South Pacific station, arrived at Mazatlan September 10, and proceeded thence to La Paz. At the latter place the admiral had occasion to protest against the alleged illegal seizure of certain property belonging to a citizen of the United States, and, in a correspondence with the governor of Lower California, to insist, as far as he was authorized to do so, on its restoration. This affair detained the Pensacola until October 10, by which time, it having been taken up by the civil authorities, she left for Acapulco, arriving at the latter port October 21. Although the country at this time was in a revolutionary condition, there seemed to be no indication that the rights of our countrymen would not be respected, and as the Lackawanna was daily expected, Rear-Admiral Murray proceeded southward, in pursuance of his instructions, to visit Panama and the ports of the South Pacific station, and assume command temporarily of the naval force in those waters in addition to that in the waters in the North Pacific. After remaining in the South Pacific for such time as the public interests seem to require, he will return with the Pensacola to his regular station.

The Lackawanna sailed from San Francisco January 25, for Lower California, visiting San Blas, Mazatlan, La Paz, Guaymas, and Acapulco; remained on the coast until April, and then proceeded to Honolulu. This place she made her headquarters, visiting other ports of the Hawaiian dominions, until September, and then returned to the coast of Mexico. A critical period in the political affairs of Hawaii detained her in that quarter. She is supposed to be, at this time, on the Mexican coast, from which she has orders for San Francisco.

The Tuscarora, engaged in deep-sea soundings, left Honolulu December 6, to run a line to the Australian coast. This duty, a delicate, and, at the same time, a laborious one, was creditably performed, and she returned to Honolulu May 27, where she remained a short time, then came to Mare Island, where she was put out of commission. On the passage homeward from Australia the commanding officer of the Tuscarora made an investigation of the trouble between Mr. Steinberger, former commissioner at Samoa, and the natives of the group.

South Pacific Station.—The Richmond has been principally at Calla and Valparaiso or cruising between those ports. Her presence, pending the revolutionary condition of affairs on the west coast of South America has given encouragement to our citizens there

The Omaha has been very actively cruising during the past year, having visited all the principal ports, some of them more than once, between Panama and Valparaiso. In March she proceeded to Juan Fernandez and made a survey of the island and its shores. The course events and the interests of American citizens have been closely watched by Captain Simpson. The Omaha arrived at Panama November 16.

Our vessels and their officers have been well received by the authorities and citizens of the South American Republics, and a spirit of friendship manifested and cordial relations maintained.

South Atlantic Station.—Rear-Admiral LeRoy left Rio de Janeiro December 7, and reached Key West January 11, and by virtue of his instructions had for a time the command of the vessels there. He proceeded from Key West by steamer to New York, thence to Hampton Roads, and, February 14, relieved Rear-Admiral Mullany of the command of the force on the North Atlantic Station.

The Monongahela, which sailed from Montevideo November 18, arrived at Key West January 11, and subsequently became a part of the North Atlantic squadron.

The Frolic reached Montevideo, from the United States, December 22, and having taken the place of the Wasp, the latter was sold January 5, it not being to the interest of the Government to repair her out there or to send her home for the purpose.

Commander Wm. A. Kirkland, of the Frolic, since the departure of Rear-Admiral LeRoy, has been looking after our interests in the waters of the La Plata, and extending such facilities to the diplomatic representatives on that quarter as the public service demanded.

The Richmond having arrived on that coast, that vessel and the Frolic now compose the naval force on the South Atlantic Station, in command of Commodore C. H. B. Caldwell.

The North Atlantic Station.—Many of the cruisers on this station have been actively and usefully employed during the year, a brief and general statement of which it appears proper to give.

January 5, Rear-Admiral Mullany transferred his flag from the Worcester to the Hartford at Norfolk, and the former was soon put out of commission as a cruiser, and, February 14, his period of service being up, he was relieved by Rear-Admiral LeRoy.

The Department contemplated the concentration at Port Royal of the vessels of this station for general inspection and fleet exercise preparatory to their distribution for the winter months in the West Indies and to other points within the limits of the command. The purpose could not be carried out, as the unsettled condition of political affairs in Hayti and Mexico required an earlier distribution of the squadron than was anticipated.

Information of a probable revolution in Hayti caused the dispatching of the Plymouth and Vandalia March 15, from Hampton Roads, for Port au Prince; and a few days later Rear-Admiral LeRoy left Hampton Roads in the Hartford, accompanied by the Marion and Huron, for Port Royal. Before the separation at Hampton Roads a battalion and howitzer drill was had. There were landed, from the Hartford, Plymouth, Vandalia, Marion, and Huron, eight companies of blue-jackets 288 men; three companies of marines, 102 men; six howitzers, 126 men a total of 516 men. The landing was made in good order, and the drill

within Fort Monroe, in the presence of the garrison, was highly satisfactory.

Soon after arriving at Port Royal serious disturbances in Mexico were reported, and Rear-Admiral LeRoy was ordered to proceed with a sufficient force to the gulf coast of that republic for the protection of American citizens and interests. The Hartford, Marion, Huron, and Shawmut were assigned to this duty. By the latter part of April or early in May all had sailed from Port Royal for the principal points on the coast—Brazos, Tampico, and Mexico. Rear-Admiral LeRoy reached Brazos in the Hartford May 9, and as the Marion was there, and the army at Brownsville, in conjunction with the gunboat Rio Bravo, sufficient to protect the frontier, continued on to Tampico, one or more of his squadron having preceded him. He remained off Tampico from the middle of May to the middle of June, and then returned to Port Royal, leaving the Swatara, Huron, and Shawmut—the Marion having previously sailed for the European station—on the coast to give particular attention to localities where the interests of our countrymen were likely to be jeoparded. The flag was shown at Vera Cruz, Tuxpan, Frontera, Touala, Santa Ana, Tupilco, and Coatzacoalcos. These vessels remained on the coast several weeks, one or another going to Key West for supplies when needed; and as it became important that their crews should have a change of climate, they returned to Port Royal in July and August and were ordered on the eastern coast, some of them as far as Halifax. A number of ports of the New England States were visited by them and the Ossipee and Monongahela, which had been sent north some weeks earlier.

From Port Royal the Hartford proceeded to Philadelphia, arriving July 12, and taking the place of the Congress, which had been there since the opening of the Centennial Exhibition to extend appropriate courtesies to foreign men-of-war.

In compliance with a request of Rear-Admiral Le Roy made some weeks before, he was detached, and relieved, August 31, by Rear-Admiral Stephen D. Trenchard, the present commanding officer of the North Atlantic station. The Hartford was in turn succeeded, September 20, by the Plymouth, and September 26 sailed for Hampton Roads, where Rear-Admiral Trenchard is at present with a part of his command.

The Plymouth, heretofore mentioned as having been dispatched, in company with the Vandalia, to Hayti, arrived at Port au Prince March 26, and the Vandalia the next day. The two vessels remained in the waters of Hayti and San Domingo, with the exception of brief visits to Kingston, Jamaica, for supplies, several weeks, and their presence was of great importance during the revolution in Hayti in April, and is believed to have prevented much shedding of blood. Their commanding officers, by a prudent and intelligent course, served the interests of our Government and gave asylum to political refugees who sought it, without complicating our relations with the dominant party of Hayti or going beyond the strict limits of neutrality.

Our flag was shown at all the principal points on the coasts of Hayti and San Domingo, and there being no further occasion for the presence of either of those vessels, the Plymouth sailed from Samana May 26 for Port Royal, S. C., and the Vandalia about May 8 for Aspinwall, U. S. C. The latter vessel remained at Aspinwall a couple of months, and arrived at New York, via Port Royal, August 2. She was there refitted, and sailed, September 9, for the European station.

The Brooklyn and Monongahela, which joined the North Atlantic sta-

tion in January, were put out of commission, the former at New Yo and the latter at Norfolk, in July. The latter was recommissioned September by a transfer to her of the officers and crew of the Junia The Alert was detached in March, refitted at New York, and sailed M 26 for the Asiatic station.

Anticipating a sickly season at Pensacola, the four monitors at tl yard, Saugus, Mahopac, Ajax, and Manhattan, were moved to Po Royal.

In May, the New Hampshire, old line-of-battle ship, having been fitte up for a store-ship at Port Royal, and placed in command of Commodor J. M. B. Clitz, was towed from Norfolk to that point. Commodor Clitz was clothed with the additional authority of senior officer in charg of the vessels in the harbor of Port Royal during any temporary absenc of the rear-admiral commanding the station. By direction of the De partment the officers and crews of the monitors at Port Royal hav maintained a strict routine of exercises and drill, and a recent inspec tion shows that the vessels are in excellent condition and their crew were under fine discipline. These exercises were for a time suspende in view of the presence of yellow fever in the vicinity.

It is gratifying to be able to state that the officers and men of th squadron at Port Royal have been remarkably healthy, and it may b added that there has not been a case of yellow fever on any one of th large number of vessels in commission on the North Atlantic statio during the past year, nor at the Pensacola navy-yard. It is not to much to say that this exemption from so serious a scourge is, no doub attributable in a great measure to the care and precaution taken by th commanding officers of the vessels and stations, and the establishmer and maintenance of strict sanitary regulations.

The monitors on the North Atlantic station are now located as fc lows: the Canonicus at New Orleans, the Dictator, Ajax, Saugus, M hopac, Manhattan, Lehigh, and Catskill at Port Royal, and the Mo tauk, Passaic, and Wyandotte at Hampton Roads.

The light-draught side-wheel steamer Rio Bravo has been in servi on the Rio Grande during the entire year, in charge of a prudent office co-operating with the military commandant at Brownsville and tl United States consul at Matamoras, and has been a useful adjunct protecting the frontier against raids, and our citizens at Matamor during the revolutionary movements in that vicinity. Although tl Rio Bravo was the best class of vessel that could be obtained on sho notice for the service in which she has been engaged, the tortuous cour and shallow water of the Rio Grande are great obstacles to her efficienc and would be, in fact, to the efficiency of any description of vessel n constructed with the especial view of overcoming these difficulties.

The vessels on independent or special service, although not constant moving, have been in a state of readiness for any sudden emergenc and have been profitably employed. The Tallapoosa has made her re ular trips betwen the navy-yards from Washington to Portsmouth, ca rying freight and objects for exhibit at the Centennial Exposition, a used in towing monitors from one point to another. The Powhatan a Dispatch have been also engaged in moving the monitors, and are all times ready as dispatch or relief vessels; and the latter was 1 some months stationed at Baltimore as a recruiting-ship for boys. T Michigan has made the annual tour of the Lakes, rendering assistance distressed vessels when possible. The Juniata, with enlisted boys unc training, has made a cruise to the Bermudas and through Long Isla *Sound*, touching at some ports seldom visited by our men-of-war, and

the Delaware to Philadelphia, thus giving the youths on board practical exercise in their profession at sea. The Supply, after returning from the Mediterranean, bringing the exhibits of American artists in Europe to Philadelphia, received a complement of boys from the training-ship at New York, and made a practice-cruise as far east as Boston. The Gettysburgh was engaged until June in establishing the exact positions by telegraphic comparison, of important points in the West Indies; and having been refitted at Washington, sailed in September for the Grecian Archipelago to conduct surveys and examinations desired by the Bureau of Navigation. The Constellation and Mayflower have made the usual practice-cruise with the cadets; and the Rio Bravo has beeen usefully employed, as before stated, on the Rio Grande.

Altogether, taking into consideration the reduction in the number of men and naval appropriations, the operations and movements of our vessels during the past year compare favorably with those of any other in time of peace.

APPENDIX.

No. 1.

ESTIMATES SECRETARY'S OFFICE.

Estimates of appropriations required for the service of the fiscal year ending June 30, 1878, by the Navy Department.

Detailed objects of expenditure, and explanations.	Estimated amount which will be required for each detailed object of expenditure.	Amount appropriated for the current fiscal year ending June 30, 1877.
SALARIES.		
Secretary, (appropriated,) per act of August 15, 1876	$8,000	.....
Chief clerk, (appropriated,) per act of August 15, 1876	2,500	.....
Disbursing-clerk, (appropriated,) per act of August 15, 1876	2,000	.....
Four clerks of class four, (appropriated,) per act of August 15, 1876	7,200	.....
Three clerks of class three, (appropriated,) per act of August 15, 1876	4,800	.....
One clerk of class three, (submitted)	1,600	.....
One clerk of class two, per act of August 15, 1876	1,400	.....
One clerk of class two, (submitted)	1,400	.....
Two clerks of class one, per act of August 15, 1876	2,400	.....
One clerk of class one, (submitted)	1,200	.....
Two messengers, at $840 each, per act of August 15, 1876	1,680	.....
Two laborers, at $720 each, per act of August 15, 1876	1,440	.....
	35,620	$31,420
CONTINGENT EXPENSES.		
Stationery, furniture, newspapers, and miscellaneous items, (appropriated)	5,000	2,500
SALARIES, BUILDING.		
Superintendent, per act of August 15, 1876	250	.....
Five watchmen, at $720 each, per act of August 15, 1876	3,600	.....
Two laborers, at $720 each, per act of August 15, 1876	1,440	.....
	5,290	5,290
CONTINGENT EXPENSES, BUILDING.		
Incidental labor, fuel, light, and miscellaneous items, (appropriated,) per act of August 15, 1876	7,000	5,000
POSTAGE, NAVY DEPARTMENT.		
For official postage-stamps for the Secretary's office and the bureaus of the Navy Department, (appropriated,) per act of August 15, 1876	20,000	20,000
PAY OF THE NAVY.		
For pay of the officers and men of the Navy, according to existing laws and the established custom of the service, for the year ending June 30, 1877, being the difference between the sum of $7,300,000, required for that purpose, and the sum of $5,750,000 appropriated therefor, (submitted)	1,550,000	.....
CONTINGENT, NAVY.		
Rent and furniture of buildings and offices not in navy-yards; expenses of courts-martial and courts of inquiry, boards of investigation, examining boards, with clerks and witnesses' fees, and traveling expenses and costs; stationery and recording; expenses of purchasing-paymasters' offices at the various cities, including clerks, furniture, fuel, stationery, and incidental expenses; newspapers and advertising; foreign postage; telegraphing, foreign and domestic; copying; mail and express wagons, and livery and express fees, and freight; all books for the		

Estimates of appropriations required for the service of the fiscal year, &c.—Continued.

Detailed objects of expenditure, and explanations.	Estimated amount which will be required for each detailed object of expenditure.	Amount appropriated for the current fiscal year ending June 30, 1877.
use of the Navy; experts' fees, and costs of suits; commissions, warrants, diplomas, and discharges; relief of vessels in distress, and pilotage; recovery of valuables from shipwreck; quarantine expenses; care and transportation of the dead; reports, professional investigation, and information from abroad; and all other emergencies and extraordinary expenses arising at home or abroad, but impossible to be anticipated or classified. (appropriated,) June 30, 1876, (Stats. at L., page 66, section 1)	$100,000	$80
CIVIL ESTABLISHMENT, NAVY-YARDS AND STATIONS.		
For the civil establishment at the various navy-yards and stations, (appropriated,) (Stats. at L., page 66)	160,000	85,

No. 2.—NAVAL ACADEMY.

REPORT OF THE SUPERINTENDENT.

UNITED STATES NAVAL ACADEMY,
November 17, 1876.

SIR: At the Naval Academy, during the past year, the prescribed course of studies has been pursued satisfactorily, and the professors and officers under my command have devoted themselves with skill and assiduity to the discharge of their duties.

The practice cruises in the Constellation and Mayflower were very successful, and the cadet-midshipmen saw more practical work in handling a ship under canvas than they would have seen in an ordinary cruise of three years in a ship of war on foreign service.

I beg to renew, in the most urgent terms, the two recommendations I made last year:

1st. That the system pursued at West Point, of appointing cadets at least one year before they shall present themselves for admission, be adopted at the Naval Academy.

2d. That Congress be moved to make the necessary appropriation to build an additional wing to the new cadet quarters, so that the cadets may be quartered under one roof, to the great benefit of their discipline, their health, and the economy of the administration of the school.

The evil practice of "hazing," to root out which Congress enacted a special law, and against which the Navy Department has directed the most stringent orders, still continues to find favor among the young men of our country, and has not disappeared from this school.

The instinct of a naval officer should teach him to be courteous to strangers, to protect the friendless, and to welcome with kindness and consideration those entering his own profession; but, unfortunately, the cadets who have already been one or two years at the Naval Academy affect to consider it necessary to their own dignity that the new-comers should be taught to pay the classes above them great deference and with that view they harass and insult them by petty indignities and by a small tyranny, which, if not promptly and severely dealt with soon grows into graver oppression.

This assumption of unauthorized authority, and this wanton rudeness

to the lads fresh from home—this brutal combination, by which a class insults an individual who does not dare defend himself lest he be overwhelmed by numbers, is a false element of naval education which it is my duty to root out of this establishment.

That the cadets here, beneficiaries of the Government, educated and paid by it, sworn, moreover, to obey its laws, who can render no return save obedience for the great benefits their country gives them, should presume to set at naught its laws and its injunctions, is not to be permitted.

I have, therefore, caused to be arraigned before a court-martial those cadets presented for trial by an investigating board, charged to make inquest into the violations of the laws enacted by Congress to prevent hazing at the Naval Academy, approved June 23, 1874. At the beginning of the present academic year the cadets were again warned of the consequences of hazing by the following general order, but, unhappily, their idea that discipline would be better advanced by procuring deference to themselves from the entering cadets than by their own submission to the law and to the orders of those placed over them, led them once more into the old hazing combination.

[Order No. 103.]

UNITED STATES NAVAL ACADEMY,
Annapolis, Md., September 14, 1876.

For the information of the cadets, the law in relation to hazing at the Naval Academy is herewith republished.

The cadets are also reminded of the painful experience of last year, and of the dismissal of several of their number for this offense of hazing, which they vainly sought to disguise under the name of "running."

The new cadets are not to be maltreated, harassed, rendered ridiculous, subjected to indignities, or in any way molested, on penalty of being arraigned before a court-martial upon the charge of hazing.

C. R. P. RODGERS,
Rear-Admiral, Superintendent.

The following is the act of Congress, approved June 23, 1874:

Hazing.

CHAPTER 453.—An act to prevent hazing at the Naval Academy.

Be it enacted by the Senate and House of Representatives of the United States of America in Congress assembled, That in all cases where it shall come to the knowledge of the Superintendent of the Naval Academy at Annapolis that any cadet-midshipman or cadet-engineer has been guilty of the offense commonly known as hazing, it shall be the duty of said Superintendent to order a court-martial, composed of not less than three commissioned officers, who shall minutely examine into all the facts and circumstances of the case and make a finding thereon; and any cadet-midshipman or cadet-engineer found guilty of said offense by said court shall, upon recommendation of said court, be dismissed: and such finding, when approved by said Superintendent, shall be final; and the cadet so dismissed from said Naval Academy shall be forever ineligible to re-appointment to said Naval Academy.

Approved June 23, 1874.

With this unfortunate attempt was connected the hope that by agreeing to refuse to testify when inquest should be made the inquiry would be baffled and investigation defeated.

Several of the third class (afterward known to have been seriously implicated in the hazing) refused to give evidence against their fellow-cadets.

It was gravely and kindly explained to them that they need not criminate themselves, but that the law would, on no other grounds,

permit any one to refuse to testify before such an inquest; and the were warned of the probable consequence of their contumacy.

They still refused. Their conduct was referred to the Navy Depar ment; and that Department warned them that the questions were law ful and proper, and must be answered, upon pain of dismissal. Th views of the Navy Department were read to them; the article of wa which requires every person in the Navy "to use his utmost exertion to detect, apprehend, and bring to punishment all offenders, and a and assist all persons appointed for that purpose," was also read.

They were again interrogated; and they again refused to give e dence, and were dismissed.

Some others, who were not afterward shown to have taken part the "hazing," but who probably gave it their countenance, were d missed under the same circumstances and after the same warnings.

Paragraph 170 of the regulations of the Naval Academy, approv January 1, 1876, is as follows: "170. * * * The practice of moles ing, annoying, ridiculing, maltreating, or assuming unauthorized a thority over the new cadets of the fourth class, known under the term "hazing," "running," &c., shall subject the older cadets to prompt dis missal from the Naval Academy, as prescribed by the act of Congres and the orders of the Secretary of the Navy."

I have the honor to be, very respectfully, your obedient servant,

C. R. P. RODGERS,
Rear-Admiral, Superintendent.

Hon. GEORGE M. ROBESON,
Secretary of the Navy.

Estimates of appropriations required for the service of the fiscal year endin June 30, 1878, by the Naval Academy.

Detailed object of expenditure and explanation.	Estimated amount which will be required for each detailed object of expenditure.
NAVAL ACADEMY.	
Pay Naval Academy:	
One professor of drawing, (head of department)	$2,500
One professor of modern languages, (head of department)	2,500
Three professors, viz, one of physics, one of chemistry, and one of Spanish, at $2,200 each	6,600
Nine assistant professors, viz, four of French, three of English studies, history, and law, two of drawing, at $1,800 each	16,200
Sword-master, at $1,500, and two assistants, at $1,000 each	3,500
Boxing-master and gymnast	1,200
Assistant librarian	1,400
Three clerks to superintendent, at $1,200, $1,000, and $800 each	3,000
One clerk to commandant of cadets	1,000
One clerk to paymaster	1,000
One apothecary	750
One mess-man, at $285; one cook, at $325.50; and messenger to superintendent, at $600	1,213
One armorer, $529.50; gunner's mate, at $469.50; and quarter-gunner, at $409.50	1,408

Estimates of appropriations required, &c.—Continued.

Detailed object of expenditure and explanation.	Estimated amount which will be required for each detailed object of expenditure.
One coxswain for gymnasium, at $469.50; one seaman in department of seamanship, one seaman in department of astronomy, &c.. and one seaman in department of physics and chemistry, at $349.50 each	$1,518 00
One band-master, at $528; and twenty-one first-class musicians, at $348 each	7,836 00
Seven second-class musicians, at $300 each	2,100 00
	53,726 00
Amount appropriated under this head, "Pay of professors and others," for the year ending June 30, 1877	55,526 00
Decrease	1,800 00
Pay of watchmen and others.	
Captain of the watch, at $2.50 per diem	$912 50
Four watchmen at $2.25 per diem each	3,285 00
Foreman of the gas and steam-heating works of the Academy, at $5 per diem	1,825 00
Ten attendants at gas and steam-heating works, one at $3.50, one at $3, and eight at $2.50 per diem each	9,672 00
One steam-pipe fitter, at $1 per diem	365 00
Three joiners, two painters, and two masons, at $3.50 per diem each	8,942 50
One tinner, one gas-fitter, and one blacksmith, at $3.50 per diem each	3,832 50
	28,834 50
Amount appropriated for the year ending June 30, 1877	28,834 50
Pay of mechanics and others:	
One mechanic at workshop, at $2.25 per diem	$821 25
One master-laborer to keep public grounds in order, at $2.28 per diem	832 20
Fourteen laborers to assist in the same, three at $2 and eleven at $1.75 per diem each	9,216 25
One laborer to superintend quarters of cadets, public grounds, &c., at $2.28 per diem	832 20
Six attendants: one at chapel, one at recitation-hall, one at offices, one at library, one at paymaster's office, and one at store, at $20 per month each	1,440 00
Twenty servants to keep in order and attend to cadet quarters, public buildings, &c., at $20 per month each	4,800 00
	17,941 90
Appropriated for the year ending June 30, 1877	17,461 90
Excess	*480 00
Pay in department of Steam-Engineering:	
One machinist, at $3.50 per diem	$1,277 50
One machinist, at $3 per diem	1,095 00
One blacksmith, at $3.50 per diem	1,277 50
One boiler-maker, at $3.50 per diem	1,277 50
One pattern-maker, at $3.50 per diem	1,277 50
One molder, at $3.50 per diem	1,277 50
Two laborers, at $1.75 per diem each	1,277 50
Total	8,760 00
Appropriated for year ending June 30, 1877	8,760 00

*This excess is occasioned by two additional attendants, one at the paymaster's office and one at the store.

Estimates of appropriations required, &c.—Continued.

Detailed object of expenditure and explanation.	Estimated amount which will be re-
REPAIRS AND IMPROVEMENTS.	
For the necessary repairs of public buildings, pavements, wharves, and walls inclosing the grounds of the Naval Academy, for improvements of the same, and for furniture, fixtures, &c	$24,
Appropriated for the year ending June 30, 1877	24,
For heating and lighting:	
For fuel, for heating and lighting the Academy and school-ships	$18,
Appropriated for the year ending June 30, 1877	18,
GENERAL MAINTENANCE NAVAL ACADEMY.	
For the purchase of books for the library	$2,
For stationery, blank-books, models, maps, &c., and for text-books for the use of instructors	2,
For the expenses of the board of visitors	2,
For the purchase of chemicals, apparatus, and instruments in the department of physics and chemistry, and for repairs of the same	5,
For the purchase of gas and steam machinery, steam pipe and fixtures, rent of buildings for use of the academy, freight, cartage, water, music, musical and astronomical instruments, uniforms for the bandsmen, telegraphing, and for feed and maintenance of teams, and for the current expenses and repairs of all kinds, and for incidental labor and expenses not applicable to any other appropriation	34,
For stores in the department of steam-engineering	
For materials for repairs in steam-machinery	1,
Total	48,
Appropriated for the year ending June 30, 1877	45,
Excess	*3,

RECAPITULATION.

Pay of professors and others	$53,
Pay of watchmen and others	28,
Pay of mechanics and others	17,
Pay in department of steam-engineering	8,
Repairs and improvements	24,
Heating and lighting	18,
General maintenance	48,
Amount estimated for	199,
Appropriated for year ending June 30, 1877	197,
Excess	1,

Respectfully submitted.

C. R. P. RODGERS
Rear-Admiral, Superinten

Hon. GEO. M. ROBESON,
Secretary of the Navy, Washington, D. C.

* This excess is occasioned by an increase of $500 for the purchase of books for the *making it the* same as heretofore appropriated, and an increase of $2,500 for the purc *chemicals* and apparatus for use in the department of physics and chemistry.

REPORT OF BOARD OF VISITORS.

UNITED STATES NAVAL ACADEMY,
Annapolis, Md., June 20, 1876.

Hon. SECRETARY OF THE NAVY:

SIR: In accordance with your instructions, the Board of Visitors assembled at the Naval Academy, on the 10th of June, and organized by electing Commodore Daniel Ammen as president, and General R. B. Potter as vice-president. All of the members were present except Chief Engineer Lawton, U. S. N. Ensign Austin M. Knight, U. S. N., was detailed as secretary. To accomplish the objects sought by the appointment of the Board, committees were designated to note the examinations, to inspect the grounds, and to inquire into the administration of the affairs of the institution.

GROUNDS, BUILDINGS, AND SANITARY CONDITION.

The condition of the grounds made a most favorable impression. The well-kept and capacious lawns, the shady and retired walks, present a scene of quiet beauty peculiarly adapted for the recreation of the cadets, and conducive of that repose necessary for a healthful mental development. Except in cases to which allusion will be made, the buildings seemed to be admirably fitted for the purposes intended, and in a proper state of repair. The armory, however, is not suitable. The building is old, and it is the opinion of the Board that a wise economy demands the erection of a new edifice as soon as practicable. While the Board was pleased with the hall which contains the steam-engine, of beautiful workmanship, employed in giving the cadets practical instruction, the shops of the engineers are too cramped, and require enlargement. The efficiency of the institution is to some extent impaired by the necessity of quartering the cadets in buildings at opposite ends of the grounds. It seems very desirable that there should be an addition to the new quarters sufficiently large to accommodate all under one roof. Under the present method it is impossible to make an appropriate division, and an increased force of officers is required to maintain the proper discipline. The hospital is capacious and beautifully located, but, owing to the salubrity of the situation, has but few inmates. In times of war or epidemic it may be useful.

ADMINISTRATION AND POLICE.

Discipline is merely the subordination of individuals for the promotion of the common weal. It can be maintained without harshness of voice or severity of expression. The system of Martinet, an officer in the army of Louis the Fourteenth, is not adapted for the development of a naval officer of the Republic, and we were gratified that it was not in use at the Naval Academy. While the Board is convinced that the discipline is firm, it has been gratified to see the paternal interest of the admiral, at the head of the institution, in the welfare of his wards, and the kind bearing of the subordinate officers toward those under their care. It has also been pleasant to observe that cadets, during hours of recreation, are encouraged to visit the families of the officers, and thereby receive the social culture which cannot be attained by the study of any text-book.

LIBRARY.

The library is admirably grouped in an old mansion within the closure, long the residence of the governors of Maryland. The roo at present are ample and convenient, but the day is not far dist when there will be a demand for more space, and then a fire-proof bu ilding should be erected. The library receives a general supervision fro the superintendent and a committee of officers. It contains works o reference adapted to the wants of the several departments, and also a good collection of voyages, histories, biographies, and magazines for the use of the cadets and families of officers. The constant discoveries in the arts and sciences require yearly accessions to preserve the value of the collection, and all moneys appropriated for this purpose increase the intelligence of our naval officers, who represent us among the nations, in distant climes.

EXPENSES OF CADETS.

The Board has devoted some time to an examination of the expenses of cadets. The naval store is supplied with goods purchased at whole sale prices, and these are furnished at original cost, with a small per centage added, to cover the expense of transportation and delivery Owing to the change of professors, and the introduction of new works there has been some accumulation of books on the shelves, but measure have been adopted by which this will hereafter be avoided.

PRACTICAL INSTRUCTION.

Theoretic instruction in the class-rooms is fully supplemented b practical exercises. Those members of the board who are versed i seamanship were particularly pleased with the evolutions of the cadet Great precision was noticed in the infantry and light-artillery drills, i the loading and discharge of the heavy guns on board of the "Santee in the handling of yards and unfurling of sails and in the conveying o messages by a system of signals.

MISCELLANEOUS RECOMMENDATIONS.

The Board wholly approves of the recommendation of last year, th appointments be made for the Naval Academy a year before the cade present themselves for examination. By the adoption of this cours appointees will have time to make the preparation required, and a larg number be spared the mortification of failure. The tables accompan ing the report show that the percentage of those admitted, to those wh graduate, is 46, and that the average age of admission is 16½ years.

It is further suggested that an alternate be designated, who, in ca of the failure of the principal, shall be entitled to an examination, a that each applicant shall be sixteen years of age. The Board has o served with gratification that an accurate physical record has be commenced by the surgeon of the academy, Dr. Gihon, by which t growth and development of the cadets may be carefully studied a compared with that of other classes of young men. This record is bas upon the following schedule of inquiries:

1. Class.
2. Date of examination.
3. Name.
4. Nativity.

5. Date of birth.
6. Weight.
7. Height, vertex to ground, and to perinæum.
8. Circumference of thorax, at inspiration and at expiration.
9. Capacity of lungs, (by spirometer.)
10. Circumference of waist.
11. Muscular power, (by dynamometer,) lifting and hauling.
12. Vision.
13. Complexion.
14. Sickness.

The Board is of opinion that the discipline of the academy requires great caution in the exercise of the right to restore cadets who have resigned under censure, or who have been dropped under the regulations.

We would not perform our whole duty if we concluded the report without alluding to the foresight of the President, and Secretary of the Navy, in the selection of so efficient a superintendent, and in the appointment of the aids and academic staff. From all the officers we have received great courtesy, and been assisted by them in the performance of our duties.

The board has been composed of representatives of the States bordering on the Atlantic and Pacific coasts, the rivers of the extreme South and the sources of the Mississippi, and in all their deliberations they have been animated by the same pride in and love for the Republic, and a desire to promote the welfare of the United States Naval Academy whose graduates are already so favorably known among the nations of the earth. The institution has been freely opened to its inspection, and every facility offered the board in the discharge of its duty.

All of which is respectfully submitted.

DANIEL AMMEN,
Commodore and President of Board.
ROBERT B. POTTER,
Vice-President of Board.
D. C. GILMAN, *Maryland.*
S. L. PHELPS, *District of Columbia.*
OLIVER ELDRIDGE, *California.*
WILLIAM N. JEFFERS,
Captain United States Navy.
A. J. EDGERTON, *Minnesota.*
T. BAILEY MYERS, *New York.*
EDWARD C. ANDERSON, *Georgia.*
EDWARD D. NEILL, *Minnesota.*

ADDRESS TO THE GRADUATING CLASS, ANNAPOLIS, JUNE 20, 1876.

BY DANIEL C. GILMAN,

President of the Johns Hopkins University, Baltimore, and member of the board of visitors to the academy for 1876.

YOUNG GENTLEMEN OF THE GRADUATING CLASS:

Soldiers and sailors are not fond of long speeches. With them it is a word and a blow; deeds, not essays, are the language they prefer. "I came, I saw, I conquered;" "England expects every man to do his duty;" "Forward and fight;" by such pithy sayings they make reports and give commands.

So before this nautical assembly my words must be brief; but you will, I am sure, grant me some grace because of the triple message I bring.

First, as a member of this board of visitors, and by their request, tender to you all, from the chief in command to the youngest cadet, our praise and thanks. Be assured that these observers from New York and California, from Georgia and Minnesota, are alike impressed with the nautical skill, the mental power, and the honorable character developed here.

Intelligent citizens in every part of the land are familiar with the history, methods, and results of this academy. They believe in it; they hope in it; they glory in it. They welcome to the public service each new band of graduates—glad and proud that the officers of the Army and Navy are so well trained at West Point and Annapolis, that neither the flag nor the finances of the country will suffer in the hands of such guardians; and hoping that the civil service will never be inferior.

As the official visitors of this year, we have seen more than most of our fellow-citizens can ever see of the methods by which such results are secured, and we add our testimony to that of others in praise of the scholarship, the seamanship, and the manliness, moral and physical, which are here promoted. In years of danger these graduates will be our defense; in years of peace our representatives throughout the globe.

Again, as a college officer, let me express the recognition which is paid by men of science, near and far, to the professors and graduates of the Naval Academy, and let me assure you of the fraternal spirit which is cherished for all who are here trained. Naval officers sometimes feel that their careers, particularly in peace, are unobserved and uncared for. Their duties call them to distant ports, where they see but seldom their countrymen; but let me assure you that they are not forgotten. Their contributions to science, their influence upon the advancement of civilization, their representative character, are never overlooked by educated men.

Sometimes, too, the colleges have a reciprocal action on the Navy. As I recall what this academy has done for science, you will gladly remember, I am sure, that it was a graduate of Columbia, Alexander Hamilton, who first suggested the Naval School; a graduate of Harvard, George Bancroft, who decreed its existence by a ministerial act which showed true statesmanship; a graduate of Yale, William Chauvenet, who shaped its scientific courses; and a graduate of Dartmouth, James W. Grimes, whose influence secured its restoration to this place, when counter-influences would fasten it upon a distant shore.

Once more, I salute you in behalf of this galaxy of mothers, sisters, friends—those bright particular stars—who will watch your course unceasingly like the constellations of the heavens. We hear it said that chivalry went out of modern society when gunpowder came in; but it is not so. With the helmet and the coat of mail, the tournament and the duel are gone, let us hope, forever; but the essentials of chivalry—loyalty, fidelity, and courtesy, the defense of the weak, bravery before danger, the homage of the pure and gentle, and the maintenance of personal honor—these principles still rule in our service. These fair faces, watching your naval jousts, as the tournaments were watched of old, rejoice as you win the sword and epaulets, and bid you be true chevaliers, more knightly, because more enlightened, than those whose exploits are recorded by the ancient chroniclers. They give you the greetings which belong to knights on the eve of battle and in the hour of victory, "Be faithful, bold, and fortunate."

Here my message is closed and my speech might be concluded, but other thoughts ask utterance amid all the associations of this place before we part.

I shall not, though the centennial year suggests it, attempt to review the naval history of this country. Were I to name all the heroes from Paul Jones to Du Pont and Farragut, and all the cruises from that of the Alfred to that of the Franklin, the list would exceed that of the famous catalogue of ships and captains which Homer has handed down to us. Brave achievements and brave men are not forgotten by the young in the romantic period of their lives. A very slight inspection of yonder library shows the well-worn pages of naval biography.

But I cannot forget that you begin your careers, young men, in the time of peace; our last danger of collision with a naval power having been averted by the principle of arbitration successfully maintained by a President whose fame was won in war.

Now peace, as well as war, breeds heroes. You need only glance at the monuments on these walls to observe that danger is always hovering near the sailor. Were these tablets chosen for the purpose, they could not be more typical:—there, the fierceness of the elements is commemorated; there, the treachery of the savage; there, the pirate's deadly blow; and on them all the bravery of those who were lately here. I confess that the heroism (recorded on yonder slab) of Talbot and his party who for fifteen hundred miles were in combat with the elements that they might bring relief to their comrades, and who died as they reached the shore, seems to me as worthy of epitaph and song as any battle action. The surgeon, the captain, or the chaplain, who faces grim pestilence and contagion for weeks and months, that he may relieve his ship-mates, is as worthy of tribute as he who directs the guns and wins the battle.

> Cowards die many times before their deaths,
> The valiant never taste of death but once.

But the battle is not always with the elements, nor with the enemy, nor with disease. There are daily foes to be met, more treacherous, more deadly, more persistent. The chief of these is idleness, which brings in its train a host of imps. It is easily routed by a love of knowledge. I know very well that life at sea is full of interruptions, as it is of danger, but science and literature abound in illustrations of victories against such obstacles; and the service is now so ordered, with its repeated and careful examinations, that the officer does not fulfill his round of duties unless he prosecutes in some form or other the studies here begun.

It is a satisfaction to hear from those who are in positions of rank and authority in the Navy Department that there is always a demand for specialists; so that no young officer who feels a special drawing toward some branch of the service need fear that his talents and attainments will be overlooked. There are, as it were, graduate places open to those who have left this institution, in the Torpedo school, the Hydrographic Office, the Academy instructorships, the Observatory, the Nautical Almanac Office, in all of which positions the training of a cadet may be carried forward to higher perfection.

If we look for the earliest entrance of the American Navy upon a foreign sea, we shall discover that a hundred years ago a brig of sixteen guns, named the Reprisal, set sail from Delaware Bay for a port in France. It carried, as a passenger, a gentleman of seventy years of age, said, by a French contemporary historian, to join "the spirit of

Socrates to the demeanor of Phocian," and with him were two gran sons, seven and seventeen years of age, doubtless the earliest cadets the Navy. Delayed by contrary winds, chased by the British cruiser capturing two prizes, the ship completed her voyage in somewhat mor than a month, not a day of which was passed by the venerable passen ger without some scientific observations, in the face of all the untimel interruptions. This philosopher was Benjamin Franklin; and his re searches respecting the temperature of the ocean laid the foundation o our exact notions of the Gulf Stream, and of the modern investigation by which the Tuscarora and the Challenger are throwing light upon th distribution of marine life. So, my friends, our Navy in its first trans atlantic voyage was the ally of science; so it is now; so may it ever be Fitly is the name of Benjamin Franklin borne on the flag-ship of ou European squadron, commanded by the admiral under whose superin tendence this graduating class began their studies here.

We cannot rejoice too much in the union of navigation and scienc thus auspiciously inaugurated in the earliest oceanic voyage of ou Navy, nor be too familiar with the obligations which we owe to a cen tury of officers, not only for what they have won and defended by thei bravery, but for what they have by their science observed, recorded, in terpreted, and promoted.

Consider for a moment the peaceful scope of the naval service.

For example, we approach the Atlantic seaboard in fog or storm, sur of our nearness to the land by observations of the Gulf Stream, whic Franklin instituted, and which his descendant, the head of the Coas Survey, has elaborated and reduced to scientific laws; then we prais the Coast Survey as a branch of the civil service, and we praise it righ ly; but we remember that scores of naval officers have been attached t its staff. We speak of the Astronomical Observatory at Washingto as a national foundation, and so it is; but the astronomers who use th majestic lens, and interpret to us its accurate revelations, are professo in the Navy, under the superintendence of an admiral distinguishe alike in peace and war. We cross the broad Pacific, guided by the sta in their courses, grateful for the ephemeris which is calculated by a officer of the Navy. When we send a message by cable to our ant podes, we owe our thanks to the young lieutenant whose ingenious in vention made the deep-sea soundings so trustworthy, and his conten porary in the service, who surveyed the submarine plateau from New foundland to Ireland. As we ascend the Chesapeake at night, guide by the colored lights which crown the headlands with a coronet of eme alds and rubies, we are conscious of our obligations to the Light-Hous Board, of which the naval officers are such efficient members. W study the chief hand-book of American geology, and it reminds us th its author, Dana, was a professor of mathematics in the Navy, and wa the companion of Wilkes in his voyage around the globe more tha thirty years ago, as ten years previous Darwin had been the scientifi companion of Fitz Roy in the Beagle. We admire the bronzes and th lacquered ware which Japan sends to the Centennial; we see her infl ences reflected in European art, and in our own domestic decoration and we involuntarily think of the naval expedition by whose wise con ciliation the island Empire of the Sun was opened to the West.

Recall the chieftains in these and kindred enterprises.

Now it is Wilkes, leading an exploring expedition around the globe and adding to the science of the world the researches of Dana and hi colleagues; now it is Porter, representing his country as their ministe *resident* in Constantinople; now it is Perry, carrying the good will o

merica to the distant island of Japan; now it is Maury, studying the g-books of every ship and sea, that he may deduce the laws of winds id currents; now it is a young lieutenant, De Haven, seeking to relieve e Franklin party in the Arctic Seas, or the young surgeon Kane, carring the flag to the remotest seas of the north; now it is Foote, supessing the slave-trade upon the coast of Africa; now it is Lynch, :ploring the Dead Sea and the Jordan; now Brooke, devising an paratus for deep-sea sounding not yet superseded; now it is Berryan, discovering the telegraphic plateau; now it is Herndon and Page, pening the rivers of South America; now Selfridge, Schufeldt, and ull, surveying the routes of an interoceanic canal; now it is Hubbard, atching the stars by night and visiting the hospital by day, till his life exhausted by this double strain; now it is Belknap, sending his pianotires to the bottom of the Pacific, discovering the submarine peaks and lains, and mapping lands never seen by mortal eye—a veritable Columus of the deepest sea-soundings; now it is a corps of engineers, studyng the laws of heat and steam; now an ordnance corps, measuring the force and velocity of projectiles; now a chronometric party in the West Indies; and now a staff of astronomers, ranking with the greatest men of their times, observing in Washington the movements of the stars, or traversing sea and land for observations of an eclipse or transit.

Young gentlemen of the graduating class, in such a noble lineage as the American Navy you are now enrolled. It was not your birthright, nor have you won your rank by favoritism or purchase. Talent introduced you; obedience and industry promoted you. The severe discipline to which as cadets you have been subjected is intended to secure "the survival of the fittest;" so that we may indeed congratulate the chosen few who have completed this course.

Now comes the voyage and the battle: "Acquit you like men; be strong." Remember wherever you go that the Navy blue represents the United States of America. You will carry the flag to the most distant sea-ports; you will wear your swords among the brave and cultivated of every nation; you will bear the torch of science to regions unexplored; you will maintain our escutcheon firm and bright in every quarter of the globe; but be mindful always that the Navy, more than any other organized corps, exhibits to the world the manners, the morals, the learning, the wisdom, and the courage of this country. You assume great responsibility, but, like those who have gone before you, you will bear it well.

> "No man here
> O Thoas, seems blame-worthy; for they all
> Are skilled in war; nor does unmanly fear
> Hold any back; nor from the difficult strife
> Doth sloth detain one warrior."

You leave your homes to form a home on shipboard, there, as you rise in command, to oversee the health, the occupations, and the welfare of large bodies of men; you leave your native land to carry its arms and its insignia to other shores, that every wanderer, the merchant or the missionary, the sailor or the traveler, when he sees the flag, may feel protected beneath its folds, his heart beating quick and his eye moistening when he thinks of the home and the Union its colors represent.

As I began with a triple message, I would offer you, in conclusion, a triple garland. Here are laurels from the board of visitors, representing for a moment the citizens of this land. Here are olive-leaves, sacred to Minerva, the symbols of learning and industry; accept them as the tokens of fraternity from other colleges and seats of learning. And

here, most precious of all, are the ivy-leaves of friendship, interspersed with the forget-me-not of affection, which these officers, these relations, and these friends—fair women and brave men—have woven for you. With these triple wreaths begin your voyages, and the blessings of Heaven attend you. Farewell.

CRUISE OF THE CONSTELLATION.

UNITED STATES NAVAL ACADEMY,
Annapolis, Md., September 27, 1876.

SIR: I have the honor to submit the following report of the practice-cruise of the Constellation, under my command, during the past summer.

On the 21st of June, 47 cadet-midshipmen of the first class, 1 of the second class, and 57 of the third class embarked at this place.

The following officers were detailed for duty on board, viz:

Lieutenant-Commander Silas W. Terry, executive officer.
Lieutenant-Commander B. H. McCalla, navigator.
Lieutenant James H. Dayton, watch-officer.
Lieutenant Harry Knox, watch-officer.
Lieutenant C. P. Perkins, instructor in navigation.
Lieutenant William P. Potter, watch-officer.
Ensign W. H. H. Sutherland, watch-officer.
Ensign J. M. Roper, watch-officer.
Ensign A. M. Knight, watch-officer.
Paymaster, W. Goldsborough.
Surgeon, H. N. Beaumont.
Assistant surgeon, D. N. Bertolette.
Boatswain, Andrew Milne.
Gunner, Robert Summers.
Clerk to commandant of cadets, C. M. McLeod.
Paymaster's clerk, James Macgregor.
Mr. Rowland Gardner, of Nantucket, was employed as coast-pilot.

On June 26, we got under way and started down the bay, towed from time to time by the United States steamer Mayflower to expedite our passage to the capes. On the 28th of the same month we were clear of the Chesapeake, and bound to New York, where we arrived July 1. At that port the cadets were granted leave to visit the Centennial, and the ship took in stores and ammunition for the cruise.

July 8, we got under way for New Bedford, where we anchored on the 10th of the same month. From that date until your arrival, on August 21, the regular exercises of the cruise were conducted in Buzzard's Bay. A brief visit of one day at Vineyard Haven, and of three or four at Newport, made the only break until our return to the capes of Virginia, September 5.

The cadet-midshipmen were disembarked at the academy, September 18.

They were, throughout the cruise, stationed and alternated in their stations in the same manner as during the preceding summer, and as exhibited in my report of last year. The system of instruction was similar, and was conducted by the watch-officers, supervised by the executive officer and myself.

Notwithstanding the visit to New York, which caused our arrival in Buzzard's Bay to be somewhat later than the year before, the remarkable prevalence of suitable weather for our work enabled us to accomplish

more than then, and confirmed, in my mind, the eminent advantages possessed by that cruising-ground over all other available ones with which I am acquainted.

The first class of forty-seven members, in charge of the deck, performed 384 maneuvers, comprising tacking, wearing, box-hauling, chappeling, getting under way, and anchoring, an increase over work of last year of more than 100 maneuvers.

The amount of instruction in navigation, too, was quite equal to that of the preceding year, and embraced middle-latitude sailing; Mercator's sailing; course, distance, current; longitude by time-sight, ☽; longitude by time-sights, ☽; latitude by meridian altitudes of ☉ and ☽; latitude by circum-meridian altitudes; latitude by altitudes near noon and by Sumner's method; times of high water, Sumner's method; times of sunset and sunrise; amplitudes, azimuths; latitude by Chauvenet's method; variation and deviation of compass; construction of Mercator's chart; chart of Buzzard's Bay; coast chart from Buzzard's Bay to Cape Hatteras; rules in regard to buoys, entering harbor; cross-bearings for plotting position of ship; chronometer comparisons and interpolations for time; adjustment of sextant.

In the third class, the instruction in navigation was only extended to such as volunteered to receive it, and but five cadets embraced the opportunity. They were O. H. P. Belmont, A. B. Clements, E. E. Hayden, R. H. Miner, and R. S. Sloan.

As the cruise progressed the improvement in the whole bearing of the gentlemen of the first class, while handling the ship under sail, was very marked, and was a source of great satisfaction to me.

Saturdays and Sundays were habitually passed in port, and the cadets granted leave to visit the shore. Those who merited the indulgence and desired to take advantage of it were permitted, either from New Bedford or Hampton Roads, to visit their friends for a week.

The general conduct of the cadets has been good. Exceptional cases have been specially reported.

I am indebted to the officers charged with instruction for their hearty co-operation in the work, as well as to all others for a pleasant and successful cruise.

Accompanying this report I inclose, in duplicate, the cruise-standing of the cadets of the first and third classes, as determined from the marks of the several officers.

Very respectfully, your obedient servant,

EDWD. TERRY,
Commander, United States Navy, Commandant of Cadets.

Rear-Admiral C. R. P. RODGERS,
Superintendent Naval Academy.

CRUISE OF THE MAYFLOWER.

U. S. PRACTICE-STEAMER MAYFLOWER, (4TH RATE,)
NAVAL ACADEMY, ANNAPOLIS, MD.,
September 18, 1876.

ADMIRAL: In obedience to your order, I respectfully submit the following report of the summer practice-cruise of this vessel under my command:

On June 21st, the twenty-eight members of the third class of cadet-

engineers reported on board for duty. They were immediately watched, quartered, stationed, messed, and berthed, and their journals and sketch-books commenced.

The plan of instruction adopted was that the cadets should land at the several ports named in your order, accompanied by the engineer-officers as instructors, the cadets on these visits to take notes of all that was seen, and rough sketches of such objects as directed by the instructors. These notes and sketches were transferred from day to day to their journals and sketch-books. Besides this, they have been instructed in the management and working of the machinery of this vessel, at all times under the immediate charge of one or both instructors.

Being in all respects ready for sea, we sailed June 26th, in company with the practice-ship Constellation. After having accompanied her to sea, we proceeded to the navy-yard, Norfolk, Va., arriving June 28. Here the cadets inspected the machine and boiler shops, foundery, dry-dock, pumping-engines, and the machinery of the United States steam-ship Alliance and Coast-Survey steamer Bache. Sailed from Norfolk, Va., July 1, arriving at the navy-yard, League Island, Pa., the following day.

The cadets visited this yard, examining the drawing of the proposed building-plans for the foundations, also inspected the sectional floating-dock and the iron-plating shop. July 3 we left the navy-yard and anchored off Philadelphia, Pa. Our visit to this port at this time was particularly intended to be made as instructive as possible to the cadets, owing to the Centennial Exhibition containing so great a collection of machinery from all parts of the world, and other objects of interest to engineering officers. The cadets were here divided into two watches, these watches visiting the Centennial Exhibition on alternate days, the watch remaining on board employed in writing up their journals and making the smooth sketches in their sketch-books of the day before. These visits continued for twelve days. During that time the most important part of the machinery-exhibit was examined by and explained to the cadets, and numbers of interesting and instructive sketches taken. They particularly examined the large shaft, with crank and couplings, forged from a solid block of crucible cast steel from the cast steel manufactory of Fred. Krupp, near Essen, Germany; large steel plates with flanges for boiler-fronts; the exhibit of large tools from William Sellers & Co., of Philadelphia, Pa., and from Whiting & Co., of Hartford, Conn.; rotary puddling-furnace from Sellers & Co., Philadelphia; the large Corliss engine, and a large gear-cutting machine from the Corliss Steam-Engine Company, of Providence, R. I., being the one used in cutting the teeth of the large wheel of the great exhibition engine; a model of a circular iron-clad, from Russia; an exhibit from the Imperial Technical School of Moscow, principally intended for the education of mechanical constructors and engineers, and technical engineers, showing by tools and models the course of practical instruction; a large collection of safety-boilers, some injectors and turbines; the exhibit of J. A. Roebling's Sons, of Trenton, N. J., of iron and steel wire rope; the Westinghouse air-brake, and manner of operating it; a variety of rotary and centrifugal pumps, piston and plunge pumps; a large variety of blowers for furnace-blasts and ventilation; and a great many other objects of great interest and value.

We next visited the establishments of William Sellers & Co., Bement & Sons, W. Cramp & Sons, J. P. Morris & Co., and Neafie & Levy, all of Philadelphia, where the cadets witnessed the manner of manufacturing the large tools, engines, boilers, and the construction of iron ships.

Having devoted as much time to Philadelphia as possible, we sailed ıly 23, arriving at Chester, Pa., the same day. Here the ship-yard ıd machine-shops of John Roach & Sons claimed our attention. Every ɛility was given the young gentlemen to examine the construction of ıe iron-clads Puritan and Miantonomoh, and an iron merchant-ship hich is being built at this yard. The attention of the cadets was irected particularly to the plating, armor-backing, stern-bearing, sea-alves, water-tight compartments, manner of bending and arranging he frames, fastenings, &c., of these two large iron-clad vessels. The nachine and boiler shops, the mold-loft and foundery were also visited. Left Chester July 25, and anchored at Edgemoor the same day. All he cadets were sent on shore with their instructors, and examined the arge bridge-making works of Sellers & Co. From here we proceeded to Wilmington, Del., arriving July 26, and visited the ship-yard and machine shops of the Harlan Hollingsworth Company, plate-rolling mills of Seidell & Hastings, the Diamond State Iron Company's Works, the machine-works of J. M. Pool & Co., machine-shops of Pusey, Jones & Co., and the Lobdell Car-Wheel Company's Works.

At Wilmington the cadets had the opportunity of examining the construction of the iron-clad Amphitrite, construction of engines, boilers, the manner of working the rolling-mills, casting, and operating of the puddling-furnaces. Left Wilmington July 30, and arrived at the New York navy-yard the next day. The machine and boiler shops, drawing-rooms, foundery, dry-dock, floating dry-dock, and pumping-engines were examined and the objects of interest explained to the cadets, and sketches taken. The machinery of the torpedo-boats Alarm and Intrepid and that of the Brooklyn were examined, and a lecture on the peculiar kinds of machinery in each carefully given. The iron and ship-building establishments of New York and Brooklyn were visited—the Delemater Iron-Works, Morgan Iron-Works, Quintard Iron-Works, Continental Iron-Works, Chrome Steel-Works, Benton's Steam and Gas Pipe Works, and Niagara Steam-Pump Works. They also visited the Brooklyn water-works, to witness the working of the large pumps, and Hell Gate, to examine the work done there, and to have explained the manner in which it is proposed to place the explosives for removing the obstructions in the channel of that place. They also visited the New York tower and the Brooklyn anchorage of the East River bridge, now under construction, and had explained to them the proposed plans for carrying over the wires for and the laying up of the main cables, and the method of anchoring these cables was thoroughly explained. August 19, in obedience to your order, I left New York with this vessel for New Bedford, Mass., arriving there the next day; we found the practice-ship Constellation in port, and the following day we accompanied you in the flag-ship Constellation to Vineyard Haven; here the cadets were given liberty, and then, on August 22, we proceeded back to New Bedford.

On the next day this vessel was inspected by yourself, and on the ıext day we sailed for Newport, R. I., arriving the same night. Here he cadets visited the torpedo-station, having the several torpedoes, uzes, magnetic batteries, &c., explained to them, and they also witnessed he explosion of prepared charges of nitro-glycerine, and examined the vorking-shops of the station. From Newport we went to Providence, R. I., leaving and arriving August 28. The establishments of the Corliss Steam-Engine Company, Providence Steam-Engine Company, American Screw Company, Providence Tool Company's Works, and the pumping-engines at Providence Hope Station were inspected by the cadets, and sketches taken of numerous objects of interest. We sailed

from Providence August 31, arriving at New London, Conn., that nigh here liberty was given, and we sailed the next day for Cold Spring, N. Y., arriving there September 2. The West Point Foundery w visited, where the operation of converting the XI inch smooth-bore gu into VIII-inch rifles was carefully examined and sketches made of t different stages of construction. Here, also, was seen machinery diff ing from that seen in the numerous shops inspected during the cru From Cold Spring we went to Newburgh, N. Y., to inspect steam-eng works of Stanton & Ward and William Wright & Co. The cadets we sent from here by rail to the Greenwood iron-furnaces, where the inte esting operation of roasting the iron-ores and reducing them to pig-iro was witnessed; the utilization of the slag by making from it minera wool was also explained. Leaving Newburgh September 7, we ar rived at the New York navy-yard in the evening. Our visit to the yard was for coal and other supplies. After receiving the necessary articles we sailed September 12 for the Chesapeake Bay and Annapolis, arriving here September 15, where, by your order, the cadets were landed to resume their academic studies on the morning of September 18.

We have been very kindly and courteously received by the command ants and other officers of the navy-yards, and by the proprietors and em ployés of the numerous private ship-yards and machine-shops, and b the directors and managers of the Centennial Exhibition. I believe th cruise has been what you intended it to be, of great value to these youn gentlemen in their future studies and in their work in the service. am glad to report that the health of all on board has been excellent and the cadets have conducted themselves creditably, both on boar ship and on shore. I cannot speak too highly of the support I have ha from the officers serving with me, Lieut. Duncan Kennedy, the e ecutive officer, Passed Assistant Engineers W. L. Nicoll and Davi Jones, instructors, and Passed Assistant Surgeon A. M. Moore. The have been ready and willing at all times, intelligent and zealous in th discharge of their several duties, and have, by their courteous and ge tlemanly conduct, added much to the comfort and pleasure of all o board. I inclose the report of the professional aptitude and attentio to duty of each cadet on board.

I am, sir, very respectfully, your obedient servant,

H. L. HOWISON,
Commander, Commanding.

Rear-Admiral C. R. P. RODGERS, U. S. N.,
Superintendent United States Naval Academy, Annapolis, Maryla

---

No. 3.—BUREAU OF YARDS AND DOCKS.

BUREAU OF YARDS AND DOCKS,
NAVY DEPARTMENT,
Washington, D. C., November 3, 1876.

SIR: I have the honor to submit the annual report of expenditur at the several navy-yards and stations under cognizance of this burea during the fiscal year ending June 30, 1876. Also estimates for i provements, repairs, general maintenance, contingent and civil esta lishment at the several yards and stations during the fiscal year endi June 30, 1878.

I beg leave to call your attention to the statements and recommen

tions of my last annual report, notably to that part of it which recommends that the New York navy-yard be preserved in its entirety, and to my opinion as to the necessity of at once commencing the building of a repairing-basin at League Island.

No appropriations for the improvement of navy-yards, with the exception of an insufficient appropriation for the dry-dock at Mare Island, and for improvements at League Island, have been made for some years, and the amounts for preservation and repairs of the valuable public buildings within the yards have been steadily decreasing. As a legitimate consequence of this unwise economy, the public works in all the navy-yards need extensive repairs, and the necessity for costly and more extended reparations will grow greater from year to year unless appropriations adequate to the thorough repairing of workshops, buildings, wharves, dry-docks, walls, &c., be promptly made. I beg to present without comment a schedule of the appropriations under the heads of "Maintenance of yards and docks," "Repairs and preservation," and "Contingent" for the past five years.

Amounts appropriated for repairs and preservation, general maintenance, and contingent.

Years.	Repairs and preservation.	General maintenance.	Contingent.
1872-73	$815,000 00	$900,000 00	.....
1873-74	666,260 00	860,000 00	$40,000 00
1874-75	500,000 00	760,000 00	40,000 00
1875-76	500,000 00	760,000 00	40,000 00
1876-77	100,000 00	440,000 00	20,000 00

I have the honor to submit herewith the bureau's estimates for improvement and repairs for the fiscal year ending June 30, 1878.

In preparing the estimates I have endeavored, to the best of my judgment, to recommend such objects only as I deem of the first importance to the welfare of the service.

KITTERY, ME.

The small amount allotted under appropriation "repairs and preservation" has been judiciously expended, and the most important and costly objects have received especial attention. Ship-houses, built many years ago, are becoming weak, and high winds strain the roofs, break the slates, open joints, and expose the frames to dampness and decay.

The dock-piers of wood, built in 1851, require extensive repairs. Machine-shops and store-houses have been examined, and many important repairs completed. Drains have been excavated through ledge to convey water away from machinery liable to be damaged in saw-pits. Bridges and landing-stages have been kept in repair for present use. The slating of all the buildings has been thoroughly examined and repaired. Many of these repairs have been temporary, the sum allotted having been inadequate to make satisfactory and thorough work.

There has been expended at this yard under the appropriation "repairs and preservation," during the fiscal year ending June 30, 1876:

For materials	$7,223 82	
For labor	13,322 84	
Making an aggregate of		$20,546 66

The amount expended under the head of "General maintenance" is:

For materials	$13,407 49	
For labor	59,548 92	
Making an aggregate of		$72,956
The amount expended under the head of "Civil establishment" is		5,000
Making a total expenditure of		98,50[illegible]

The estimates submitted by the authorities at the yard for the fiscal year ending June 30, 1878, are, for—

Repairs and preservation	$58,750
General maintenance	85,350
Civil establishment	3,700
Making an aggregate of	147,800

The very limited amounts allotted to this yard for repairs and preservation during the last two fiscal years, although expended to the best possible advantage, have been quite insufficient to make all the repairs actually needed. Objects of the first importance have been attended to as far as the funds would admit, but many of the minor works have necessarily been delayed for further appropriations.

BOSTON, MASS.

No appropriation was made for permanent improvements at this yard, and the expenditures during the fiscal year ending June 30, 1876, were confined to the necessary repairs of existing buildings, docks, wharves, roads, &c., and these have received such attention as the limited amount alotted would allow.

The amount expended under head of "Repairs and preservation" during the fiscal year is:

For materials	$17,716 37	
For labor	34,112 92	
Making an aggregate of		$51,829 2[illegible]

The amount expended under the head of "General maintenance" is:

For materials	$29,779 60	
For labor	85,473 23	
Making an aggregate of		115,252 [illegible]
The amount expended under head of "Civil establishment" is		6,546 [illegible]
Making a total expenditure of		173,629 [illegible]

The estimates submitted by the authorities of the yard for new improvements, repairs and preservation, general maintenance, and civil establishment, are, for—

New improvements	$463,106
Repairs and preservation	109,000
General maintenance	141,550
Civil establishment	8,650
Making a total of	722,306

There has been no special appropriation for works of improvement at this yard for several years past. Some of the objects for which estimates are submitted from the yard are regarded as very necessary for the protection of the public property, and as additions to the faciliti[illegible]

for performing the current work of the service. Estimates for such as are deemed of pressing necessity by the bureau are submitted in another part of this report.

NEW LONDON, CONN.

At this yard there has been expended during the past fiscal year, under appropriation "navy-yard, New London:"

For materials	$7,315 28	
For labor	41,681 03	
Making an aggregate of		$48,996 31
The amount expended under head of "General maintenance," is		6,720 76
Making a total expenditure of		55,717 07

The above amount, under head of "Naval station, New London," was expended in grading the site, completing store-house, and erecting temporary buildings for stables, blacksmith's shop, and extending watch-house.

The estimates submitted by the yard authorities for the year ending June 30, 1878, are, for—

Naval station, New London	$457,500	
Repairs and preservation	3,469	
General maintenance	26,375	
Civil establishment	7,230	
Making an aggregate of		$494,574

NEW YORK, N. Y.

During the fiscal year ending June 30, 1876, there was expended at this yard, under appropriation "repairs and preservation:"

For materials	$10,641 60	
For labor	72,464 66	
Making an aggregate of		$83,106 26

Under the head of "General maintenance," the amount expended was—

For materials	$23,848 72	
For labor	112,752 75	
Making an aggregate of		136,601 47
The amount expended for civil establishment is		7,576 24
Being a total expenditure for the year of		227,283 97

There was no special appropriation for objects of improvement, and the expenditures upon buildings, docks, wharves, &c., have been confined to the allotment for "repairs and preservation." These expenditures have been made judiciously, and with due regard to the public interests. Repairs have been made where most needed, upon the principal buildings, docks, wharves, roads, and bridges, and a considerable amount has been expended in dredging and removing obstructions from the channels. The earth removed from the channels has been utilized in filling up low places and grading upon the flats near Washington avenue. The buildings in the yard are generally in fair condition.

The estimates submitted by the yard authorities for the fiscal year ending June 30, 1878, are, for—

New works of improvement	$596,633 27	
Repairs and preservation	134,500 00	
General maintenance	176,350 00	
Civil establishment	7,800 00	
Making a total of		$915,283 27

This important yard, located at the great commercial center country, possesses some advantages over all others, and has ma ities for the execution of the public work; other improveme needed to make the establishment complete, for some of which t authorities have submitted estimates, and from these the bur selected such as it deems of most pressing necessity, estim which will be found in an another part of this report.

LEAGUE ISLAND, PA.

By authority of an act of Congress the old navy-yard at Phila was sold at public auction on the 2d day of December, 1875. this sale arrangements were made for the removal of all materials and other public property from the old yard to League Islan United States steamer Antietam was fitted up as a store-ship, the property belonging to the United States under charge of the of Equipment and Recruiting was placed on board, and the ve towed to League Island, and moored in the back channel, wl now remains. A permanent store-house for Bureau of Yards an having been erected at the island, all the materials and stores ing to that bureau were transported to League Island, and p stowed in store. No buildings having been erected for the rece property in charge of other bureaus, temporary buildings were constructed for the protection of property in charge of the Bu Construction and Repair, Steam-Engineering, Ordnance, Medic Surgery, Navigation, and Provisions and Clothing. The large qu of materials and stores under charge of these several bureaus w moved as expeditiously and economically as possible. The tw houses were taken down, transported to League Island, and re-e the largest as a ship-house for building purposes, the other as house for Bureau of Construction and Repair.

Some other buildings were removed to League Island and re- others were taken down and the materials transported to the prior to the sale of the old yard. These old materials will be uti future constructions as far as available.

The amounts expended at this ya d during the fiscal year endi June, 1876, are, under head of "Navy-yard, League Island:"

For materials	$51,878 95	
For labor	125,002 45	
Making an aggregate of		$1

Under the head of "Repairs and preservation:"

For materials	18,942 41	
For labor	96,682 75	
Making an aggregate of		1

Under the head of "General maintenance:"

For materials	22,577 26	
For labor	52,940 43	
Making an aggregate of		
Under head of "Civil establishment"		
And under the head of "Contingent"		
Making a total of		3

The estimates submitted by the authorities of the yard for the fiscal year ending 30th June, 1878, are—

For works of improvement	$1,760,800
For repairs and preservation	60,000
For general maintenance	64,950
For civil establishment	7,900
Making a total of	1,893,650

The civil engineer says, in submitting estimates for the large sums of money deemed necessary during the next fiscal year for the construction of the important works designed for the improvement of this navy-yard, it may be proper to briefly mention the leading principles that have governed in determining the amounts and objects of the several appropriations recommended.

The original plan, in deciding upon the abandonment of the old Philadelphia navy-yard and the selection of this island as the site for another yard, was that here should be erected a vast industrial establishment, designed upon the most extensive scale for the construction and fitting of vessels of war and the manufacture of all the appliances of naval warfare.

This original design was kept well in view by the board of civil engineers convened in 1873 to prepare the general plan for the development of a navy-yard at this point. The plan then made, and according to which all permanent improvements thus far have been built, is so arranged as to admit of the construction at first of a very small working navy yard, but one yet capable of being afterward almost indefinitely extended without altering or demolishing the works first built.

But few permanent improvements under this plan have yet been made, and the works now in progress are largely of a temporary character, intended to place the yard as soon as possible in working order, or in a condition to repair, and possibly to build, in a small way, wooden vessels for the Navy. These temporary preparations being well advanced, attention should now be given to the development of the original plan with as much rapidity as possible.

In carrying out this great design, the few permanent buildings already erected should, as soon as possible, be supplemented by other works even more expensive and difficult of construction and more important in their uses. The first and most important of these undertakings are the Delaware River quay-wall, the floating-dock basins, and ship-building ways. During the past fiscal year plans, specifications, and estimates have been prepared for the first two of these objects.

The active operations of the year in the execution of the various permanent and temporary improvements already made, and in the preparation of plans and estimates for those improvements, and for others now in progress, have left but little time for considering and designing works for future improvements. In addition to the plans named, however, plans have been prepared for a complete system of sewerage and drainage for the yard, and other designs for various yard-buildings are in progress.

From these plans, and others of a preliminary character, the foregoing estimates have been prepared; the estimates include all the works of improvement that probably can be executed during the fiscal year with advantage to the interests of the Government.

WASHINGTON, D. C.

The law making appropriations for the fiscal year ending 30th June, 1876, prohibited the expenditure at the Washington yard of any por-

tion of the amount appropriated under head of "Repairs and p tion." There was a small balance of allotment for the pre io which was unexpended, but some works were in progress at t mencement of the fiscal year, which were continued until the re balance was exhausted.

The amount expended under head of "Repairs and preservat for—

Materials	$1,105 89
Labor	695 86
Making an aggregate of	
General maintenance, for materials	11,297 45
Labor	52,795 80
Making an aggregate of	
And for civil establishment	
Being a total expenditure of	

The entire failure of an appropriation for repairs and preserva the last, and the very limited amount allotted for the present fisc has compelled the postponement of many repairs to the variou ings which are absolutely necessary for the protection of th property, and consequently a larger sum will be required for t fiscal year.

The estimates submitted by the yard authorities are—

For repairs and preservation	
For general maintenance	
For civil establishment	
Making a total of	

This yard is well supplied with buildings and machinery, and is asked for new improvements; many of the buildings require and some of them extensive repairs, and the amount estimate lieved to be no more than is necessary for the proper protectio public property.

NORFOLK, VA.

There was no appropriation for improvements at this yard, limited amount allotted under repairs and preservation has be ciously and economically expended in making such repairs to t ous buildings, docks, &c., as were indispensably necessary.

The amount expended during the fiscal year ending 30th Jun under the head of "Repairs and preservation," is—

For materials	$21,924 70
For labor	35,030 64
Making an aggregate of	$

The amount expended under the head of "General maintenance" is—

For materials	$18,374 88
For labor	69,063 26
Making an aggregate of	
Under the head of "Civil establishment" there was expended	
Making a total expenditure of	1

The estimates submitted by the authorities of the yard for the fiscal year ending June 30, 1878, are, for—

Works of improvement	$341,209 75
Repairs and preservation	111,764 05
General maintenance	96,786 15
Civil establishment	7,600 00
Making a total of	557,359 95

This is one of the most important navy-yards, and but few appropriations for its improvement have been made for several years past; the objects for which these estimates are submitted are all important, and their construction at an early day is much desired, as they will contribute largely to the efficiency of the yard.

PENSACOLA, FLA.

It became necessary during the past year to erect temporary buildings for hospital purposes for the accommodation of yellow-fever patients, the old hospital-buildings having been destroyed during the war. Some temporary buildings in the yard were used for yellow-fever patients in 1874, and in consequence of their proximity to the quarters several valuable officers and men fell victims to the disease. These buildings were therefore destroyed and new buildings were erected outside of and remote from the yard. No other new works have been constructed during the past fiscal year.

The amount expended under the head of "Repairs and preservation" is—

For materials	$11,907 51	
For labor	32,512 72	
Making an aggregate of		$44,420 23

Under the head of "General maintenance" is—

For materials	18,310 05	
For labor	46,681 50	
Making an aggregate of		64,991 55
The new hospital buildings were built under contract and charged to contingent, and cost		18,872 00
Amount expended under civil establishment		2,001 00
Making a total expenditure of		130,284 78

Estimates are submitted by the authorities of the yard for the fiscal year ending June 30, 1878:

For works of improvement	$81,440 10
For repairs and preservation	98,445 91
For general maintenance	77,503 36
For civil establishment	8,500 00
Making a total of	265,889 37

If this yard is to be kept in active operation, the objects estimated for are very desirable and necessary; but if not, they may be deferred for future consideration.

MARE ISLAND, CAL.

There has been expended at this yard during the fiscal year ending June 30, 1876, for objects of improvement:

For materials	$101,282 05	
For labor	71,794 29	
Making an aggregate of		$173 076 34

Under the head of "Repairs and preservation" there has been expended—

For materials	$15,362 56	
For labor	50,486 68	
Making an aggregate of		$65,849 24

Under the head of "General maintenance:"

For materials	24,367 70	
For labor	80,481 94	
Making an aggregate of		104,849 64
Under the head of "Contingent" there has been expended		18,411 57
Under the head of "Civil establishment"		6,245 93
Making in all a total of		368,432 72

The only works of improvement which have been in progress during the year are the excavated stone dry-dock and the iron-plating shop. The comparatively small amount appropriated for these important works has been entirely insufficient to enable the bureau to make much progress toward their completion, almost the whole of the appropriation having been expended within the first six months of the fiscal year, and the necessary suspension of work on the dry-dock is greatly to be regretted, and will cause delay in its completion and additional cost in the construction.

Estimates have been submitted by the authorities of the yard for the fiscal year ending June 30, 1878, for—

Works of improvement	$1,647,085 61
Repairs and preservation	159,000 00
General maintenance	116,560 00
Civil establishment	9,200 00
Making a total of	1,931,845 61

SACKETT'S HARBOR, N. Y.

The expenditures of this station during the fiscal year ending 30th June, 1876, were for the proper preservation of the public property, and amounted to $913.77.

Some of the wharves and buildings having been recently damaged by a severe storm, the sum of $2,000 is required for the necessary repairs.

KEY WEST, FLA.

At this station necessary repairs have been made to the wharves and buildings, and the amount expended during the fiscal year ending 30th June, 1876, is:

For repairs and preservation	$3,720 00
For general maintenance	2,336 04
Making an aggregate of	6,056 04

Estimates have been received from the authorities at the station for the fiscal year ending 30th June, 1878:

For repairs and preservation	$18,639 30
For general maintenance	8,105 00
Making a total of	26,744 30

NAVAL ASYLUM.

ɜ were, on the 1st July, 1875, 127 persons, including officers and nts, borne on the rolls of the asylum. During the year 24 bene- have been admitted, 13 have died, 3 were dismissed, 5 left at ɜn request, and 2 were sent to the Government Hospital for the

ıg the past fiscal year proper care and attention have been de-) the comfort and welfare of the beneficiaries, and as a general y conduct themselves with propriety, and appear contended and for the provisions made by the Government for their support. of insubordination occur occasionally, but these are suppressed id enforcement of the regulations of the institution.

xpenses of the institution during the past year are:

stence	$19,474 64
ing, tobacco, &c	13,139 47
dants	7,617 05
llaneous items	7,151 48
rs	4,685 64
of grounds	854 00
al expenditure	52,922 28

ıates have been submitted by the governor of the institution for ɔort during the fiscal year ending June 30, 1878, amounting to

port of expenditures at navy yards, stations, and Naval Asylum for fiscal year ending June 30, 1876.

and stations.	Appropriations.					
	Yard improvements.	Repairs and preservation.	General maintenance.	Civil establishment.	Contingent.	Total.
N. H		$20,546 66	$72,956 41	$5,000 93		$98,504 00
		51,829 29	115,252 83	6,546 90		173,629 02
, Conn	$48,996 31		6,720 76			55,717 07
N. Y		83,106 26	136,601 47	7,576 24		227,283 97
d	176,881 40	115,625 16	75,517 69	5,245 46	$5,234 40	378,504 11
, D. C		1,801 75	64,093 25	4,654 31		70,549 31
		56,955 34	87,438 14	5,051 00		149,444 48
'la		44,420 23	64,991 55	2,001 00	18,872 00	130,284 78
Cal	173,076 34	65,849 24	104,849 64	6,245 93	18,411 57	368,432 72
arbor			913 77			913 77
		3,720 00	2,336 04			6,056 04
m	52,922 28					52,922 28
	451,876 33	443,853 93	731,671 55	42,321 77	42,517 97	1,712,241 55

No. 2.—*Detailed report from navy yards and stations of expenditures under repairs and preservation during the fiscal year ending June* 30, 1876.

Objects.	Portsmouth.	Boston.	New York.	League Island.	Washington.	Norfolk.	Pensacola.	Mare Island.	Key West.	Total.
Yard-buildings	$10,123 17	$25,688 70	$29,287 29	$29,593 20	$360 68	$15,962 45	$8,472 35	$18,319 21	.....	$137,807 05
Officers' quarters	1,855 60	2,605 75	7,220 02	10,904 78	24 39	1,788 24	19,325 50	11,673 82	.....	55,398 10
Wharves, bridges, landings, and boats	2,504 23	9,938 32	20,258 96	1,083 25	957 84	19,465 83	3,948 11	5,142 65	.....	63,259 19
Roads, walks gutters, and drains	1,107 52	6,260 31	2,277 02	14,280 79	203 83	3,510 25	3,282 15	3,931 59	.....	34,803 46
Fences and walls	22 50	836 38	2,998 93	.....	174 28	2,830 26	834 44	3,151 64	.....	10,848 43
Cranes, scows, and derricks	381 44	965 98	5,012 73	2,614 17	.....	181 20	731 88	3,238 33	.....	13,125 73
Furnaces, forges, heating-apparatus, &c	614 95	1,598 20	3,560 97	1,855 55	1 00	632 85	112 40	4,983 20	.....	13,359 12
Tracks and scales	21 00	.....	533 56	7,054 81	.....	385 63	31 70	62 00	.....	8,088 70
Water and gas works	1,540 15	3,345 82	2,465 88	2,925 84	79 73	1,421 90	61 18	2,748 86	.....	14,589 36
Dredging and scowing	.....	.....	4,987 21	15,656 78	.....	3,591 53	.....	3,028 12	.....	27,263 64
Dry-dock	1,408 54	52 26	1,554 01	1,005 13	.....	775 92	.....	42 38	.....	4,838 24
Miscellaneous repairs	967 56	537 57	2,999 68	28,650 86	.....	6,409 28	7,630 52	9,557 44	$3,720 00	60,472 91
Total	20,546 66	51,829 29	83,106 26	115,625 16	1,801 75	56,955 34	44,420 23	65,849 24	3,720 00	443,853 93

No. 3.—*Detailed report of expenditures under general maintenance, received from yards and stations, during the fiscal year ending June 30, 1876.*

Objects.	Portsmouth.	Boston.	New London.	New York.	League Island.	Washington.	Norfolk.	Pensacola.	Mare Island.	Sackett's Harbor.	Key West.	Total.
Freight and transportation	$2 45	$5 95	$51 15	.....	$81 14	.....	$0 90	$308 56	$2,466 94	.....	.....	$2,917 09
Printing, stationery, and advertising	545 92	874 35	147 02	$1,372 51	1,194 47	$343 60	1,304 29	617 08	2,513 19	.....	.....	8,912 43
Books, maps, models, and drawings	466 00	367 00	7 00	275 00	241 00	17 00	547 59	.....	1,729 90	.....	.....	3,650 49
Purchase and repair of fire-engines	429 16	898 85	13 65	4,756 28	1,198 65	231 30	2,125 43	1,456 01	586 39	.....	.....	11,695 72
Machinery of every description, and patent-rights	.....	178 78	.....	103 70	1,865 24	946 25	2,359 92	4,450 26	9,005 97	.....	.....	18,910 12
Repairs on steam-engines, and attendance on same	102 83	4,143 40	.....	1,777 03	8,328 17	1,194 74	2,881 19	2,594 87	4,226 58	.....	.....	25,248 81
Purchase and maintenance of oxen and horses, pay of hired teams, &c	13,739 47	19,267 82	255 80	16,634 75	16,807 98	4,239 94	14,639 72	8,007 20	18,619 68	.....	.....	112,212 36
Carts, timber-wheels, and tools of every description	2,382 79	18,063 16	550 38	3,007 01	8,394 89	1,328 77	15,418 18	5,012 71	4,743 64	.....	.....	58,901 53
Postage on letters on public service, and telegrams	56 16	212 89	12 50	77 45	578 96	14 69	104 77	900 00	48 95	.....	.....	2,006 37
Furniture for Government houses and offices in navy-yards	1,993 18	745 92	253 11	147 36	2,848 54	2,082 68	4,829 28	1,800 02	3,068 91	.....	.....	17,769 00
Coal and other fuel for yards and docks purposes	6,389 09	4,200 74	134 50	2,616 96	2,078 98	2,013 48	1,622 89	4,572 60	2,714 25	.....	.....	26,343 49
Candles, oil, and gas	2,958 66	3,966 55	40 20	5,838 25	357 62	1,377 60	2,855 44	1,935 38	7,265 22	.....	.....	26,594 92
Clearing and cleaning up yard, and care of buildings	4,612 71	20,815 07	1,020 73	10,919 99	3,866 92	11,886 81	8,000 88	11,274 80	3,955 27	.....	.....	76,353 18
Attendance on fires, lights, fire-engines, and apparatus	5,239 00	4,844 20	.....	8,606 75	5,316 71	3,681 90	5,060 83	597 52	3,308 59	.....	.....	36,655 50
Incidental labor not chargeable to other appropriations	10,606 84	3,393 75	1,683 05	22,262 89	7,718 27	20,389 92	9,424 59	7,893 49	18,503 38	$913 77	$1,244 04	103,033 99
Water-tax	100 00	11,270 90	40 93	6,447 29	.....	.....	45 00	195 45	2,449 95	.....	.....	20,549 52
Tolls and ferriage	22 08	.....	55 42	202 50	.....	.....	250 00	99 70	2,651 70	.....	.....	3,281 40
Pay of watchmen	23,254 32	22,883 45	2,455 32	51,162 73	14,544 50	14,323 00	15,636 12	13,082 50	16,468 86	.....	1,092 00	174,902 80
Flags, awnings, and packing-boxes	25 75	120 05	.....	393 02	95 65	21 57	331 12	142 40	552 27	.....	.....	1,651 83
Rent of landing	30 00	.....	.....	.....	.....	.....	.....	.....	.....	.....	.....	30 00
Total	72,956 41	115,232 83	6,720 76	136,601 47	75,517 69	64,093 25	87,438 14	64,940 55	104,849 64	913 77	2,336 04	721,620 55

No. 4.—*Estimates received from navy yards, stations, and Naval Asylum for fiscal year June* 30, 1878.

Yards and stations.	Appropriations.				To
	Yard improvements.	Repairs and preservation.	General maintenance.	Civil establishment.	
Portsmouth, N. H	.....	$58, 750 00	$85, 350 00	$3, 700 00	$147
Boston, Mass	$463, 106 55	109, 000 00	141, 550 00	8, 650 00	722
New London, Conn	457, 500 00	3, 469 00	26, 375 00	7, 230 00	494
New York, N. Y	596, 633 27	134, 500 00	176, 350 00	7, 800 00	915
League Island, Pa	1, 760, 800 00	60, 000 00	64, 950 00	7, 900 00	1, 893
Washington, D. C	.....	53, 475 00	75, 000 00	3, 700 00	132
Norfolk, Va	341, 209 75	111, 764 05	96, 786 15	7, 600 00	557
Pensacola, Fla	81, 440 10	98, 445 91	77, 503 36	8, 500 00	265
Mare Island, Cal	1, 647, 085 61	159, 000 00	116, 560 00	9, 200 00	1, 931
Sackett's Harbor, N. Y	.....	2, 000 00	.....	.....	2
Key West, Fla	.....	18, 639 30	8, 105 00	.....	26
Naval Asylum, Pa	80, 335 00	.....	.....	.....	80
Total	5, 428, 110 28	809, 043 26	868, 529 51	64, 280 00	7, 169

No. 5.—*Detailed estimates, from navy yards and stations, for repairs and preservation, fiscal year ending June* 30, 1878.

Objects.	Portsmouth.	Boston.	New London.	New York.	League Island.	
Yard-buildings	$15, 000 00	$40, 000 00	$500 00	$25, 000 00	$14, 000 00	$23
Officers' quarters	5, 000 00	5, 000 00	400 00	2, 500 00	300 00	
Wharves, bridges, landings, and boats	12, 000 00	12, 000 00	400 00	40, 000 00	12, 000 00	1
Roads, walks, gutters, and drains	6, 000 00	8, 500 00	544 00	10, 000 00	10, 000 00	
Fences and walls	1, 000 00	2, 500 00	500 00	10, 000 00	1, 000 00	10
Cranes, scows, and derricks	5, 000 00	3, 000 00	.....	5, 000 00	3, 000 00	
Furnaces, forges, heating-apparatus, &c	5, 000 00	5, 500 00	125 00	7, 500 00	1, 500 00	2
Tracks and scales	250 00	5, 000 00	.....	2, 000 00	2, 500 00	
Water and gas works	1, 500 00	5, 500 00	.....	5, 000 00	700 00	3
Dredging and scowing	.....	8, 500 00	.....	15, 000 00	.....	
Dry-dock	3, 000 00	5, 000 00	.....	2, 500 00	5, 000 00	10
Miscellaneous repairs	5, 000 00	8, 500 00	1, 000 00	10, 000 00	10, 000 00	2
Total	58, 750 00	109, 000 00	3, 469 00	134, 500 00	60, 000 00	53

Objects.	Norfolk.	Pensacola.	Mare Island.	Sackett's Harbor.	Key West.	
Yard-buildings	$42, 821 34	$27, 393 89	$17, 000 00	$2, 000 00	$1, 736 80	$208
Officers' quarters	8, 742 85	25, 939 64	10, 000 00	.....	.....	58
Wharves, bridges, landings, and boats	7, 821 08	18, 321 75	10, 000 00	.....	15, 972 50	129
Roads, walks, gutters, and drains	15, 971 16	5, 858 00	8, 000 00	.....	.....	65
Fences and walls	5, 948 85	6, 500 63	6, 000 00	.....	.....	43
Cranes, scows, and derricks	7, 785 43	677 00	10, 000 00	.....	.....	34
Furnaces, forges, heating-apparatus, &c	732 80	427 00	2, 000 00	.....	.....	24
Tracks and scales	2, 088 43	1, 025 00	4, 000 00	.....	930 00	17
Water and gas works	3, 296 98	965 00	4, 000 00	.....	.....	24
Dredging and scowing	10, 829 87	.....	20, 000 00	.....	.....	54
Dry-dock	1, 305 82	420 00	50, 000 00	.....	.....	77
Miscellaneous repairs	4, 419 44	10, 918 00	18, 000 00	.....	.....	70
Total	111, 764 05	98, 445 91	159, 000 00	2, 000 00	18, 639 30	80

Objects.	Portsmouth.	Boston.	New London.	New York.	League Island.	Washington.	Norfolk.	Pensacola.	Mare Island.	Key West.	Total.
Freight and transportation	$100 00	$200 00	$100 00	$150 00	$100 00	$50 00	$300 00	$1,000 00	$9,000 00	.....	$11,000 00
Printing, stationery, and advertising	450 00	1,200 00	400 00	2,000 00	1,000 00	1,000 00	1,000 00	850 00	3,500 00	.....	11,400 00
Books, maps, models, and drawings	150 00	500 00	100 00	1,000 00	250 00	50 00	700 00	100 00	4,700 00	.....	7,550 00
Purchase and repair of fire-engines	2,000 00	3,000 00	.....	6,000 00	1,000 00	500 00	2,982 74	2,830 00	2,000 00	.....	20,312 74
Machinery of every description, and patent-rights	1,500 00	1,500 00	3,000 00	2,000 00	5,000 00	1,500 00	3,177 69	5,410 00	4,000 00	.....	27,087 69
Repairs on steam-engines, and attendance on same	1,000 00	3,500 00	2,000 00	6,000 00	3,000 00	1,500 00	9,903 03	5,969 00	5,000 00	.....	37,872 03
Purchase and maintenance of oxen and horses, pay of hired teams, &c	10,000 00	30,000 00	9,000 00	30,000 00	15,000 00	7,000 00	16,437 81	6,892 00	20,000 00	.....	144,329 81
Carts, timber-wheels, and tools of every description	1,000 00	20,000 00	2,000 00	10,000 00	4,000 00	2,000 00	7,265 59	5,760 00	3,500 00	.....	55,525 59
Postage on letters on public service, and telegrams	150 00	350 00	50 00	200 00	500 00	50 00	100 00	1,500 00	60 00	.....	2,960 00
Furniture for Government houses and offices in navy-yards	10,000 00	1,500 00	500 00	5,000 00	1,000 00	3,000 00	6,319 45	5,400 00	5,000 00	.....	37,719 45
Coal and other fuel for yards and docks purposes	10,000 00	8,500 00	750 00	4,000 00	1,500 00	3,000 00	2,692 28	1,100 00	7,000 00	.....	38,542 28
Candles, oil, and gas	3,000 00	4,000 00	100 00	6,000 00	500 00	1,600 00	2,641 50	1,797 00	9,500 00	.....	29,138 50
Clearing and cleaning up yard and care of buildings	5,000 00	22,500 00	2,000 00	12,000 00	5,000 00	10,000 00	6,598 36	11,817 60	2,000 00	$150 00	77,065 96
Attendance on fires, lights, fire-engines, and apparatus	6,000 00	5,500 00	.....	8,000 00	7,000 00	4,000 00	6,542 90	1,941 50	3,000 00	.....	41,984 40
Incidental labor not chargeable to other appropriations	9,000 00	2,500 00	1,000 00	20,000 00	5,000 00	24,700 00	9,000 00	10,160 26	11,000 00	360 00	92,720 26
Water-tax	100 00	12,500 00	75 00	8,000 00	.....	.....	30 00	.....	5,700 00	.....	26,405 00
Tolls and ferriage	100 00	.....	100 00	300 00	.....	.....	300 00	180 00	3,000 00	.....	3,980 00
Pay of watchmen	25,000 00	24,000 00	5,200 00	55,000 00	15,000 00	15,000 00	20,425 40	14,346 00	18,000 00	1,095 00	193,066 40
Flags, awnings, and packing-boxes	800 00	300 00	.....	700 00	100 00	50 00	369 40	450 00	600 00	.....	3,369 40
Total	85,350 00	141,550 00	26,375 00	176,350 00	64,950 00	75,000 00	96,786 15	77,503 36	116,560 00	1,605 00	862,029 51

No. 7.—*Bureau's estimates for navy yards, stations, and Naval Asylum for the fiscal ending June 30, 1878.*

Yards and stations.	Appropriations.					
	Yard improvements.	Repairs and preservation.	General maintenance.	Civil establishment.	Contingent.	T[illegible]
Portsmouth	.....	$58,750	$85,350	$3,700	.....	$14[illegible]
Boston	$100,255	109,000	141,550	2,650	.....	35[illegible]
New London	.....	3,469	26,375	7,230	.....	3[illegible]
New York	287,983	134,500	176,350	7,800	.....	60[illegible]
League Island	655,800	60,000	64,950	7,900	.....	78[illegible]
Washington	.....	53,475	75,000	3,700	.....	13[illegible]
Norfolk	106,612	111,764	96,786	7,600	.....	32[illegible]
Pensacola	38,357	98,445	77,503	8,500	.....	22[illegible]
Mare Island	902,047	159,000	116,560	9,200	.....	1,186
Sackett's Harbor	.....	2,000	.....	.....	.....	2
Key West	.....	18,639	1,605	.....	.....	20
Naval Asylum	63,597	.....	.....	.....	.....	63
Contingent	.....	.....	.....	.....	$50,000	50
Total	2,154,651	809,042	862,029	64,280	50,000	3,940

The aggregate amount of the estimates from the various yards a stations for improvements is very large, being $5,347,775.28; and t bureau, after careful examination, has reduced this amount to $2,091,0 which sum is recommended to be expended at the following yards, a for the objects named:

At the Boston yard.

For boundary-wall	$52,434
For yards and docks, blacksmith-shop	10,552
For tracks and cars	5,000
For new floor to rope-walk	32,269
Total	100,255

An appropriation for the boundary-wall on the southwesterly side the yard is regarded as most urgently required for the protection a safety of the large amount of public property stored in the vicini At this point the Government property is bounded by property belon ing to the Fitchburgh Railroad Company, on which is stored a lar quantity of coal. The present division is an old, dilapidated wood shed and fence, affording no protection whatever against the ingress depredators who may desire to enter the yard for plunder or for i cendiary purposes. This old fence is 450 feet long, reaching to de water, and should a fire occur there, either through accident or desig the loss to the Government might be immense.

A blacksmith-shop for the use of the Bureau of Yards and Docks greatly needed. At present all its work is done in an old shed, ve inconvenient and dangerous, and it is very desirable that all the o temporary buildings should be removed from the yard as soon as po sible, as they are unsightly, inconvenient, and unsafe.

The appropriation for tracks and cars is of much importance. The co of transporting heavy articles over common roads is very great, and t extension of these rail-tracks through the yards generally will ad greatly to our facilities, and effect great economy in the expenditur for transportation.

The floor of the large rope-walk is in a wretched condition, and shoul

be renewed at once. In its present state the manufacture of cordage is much impeded, from frequent giving way of the floor and the time expended in necessary temporary repairs. This is the only rope-walk belonging to the Government; its machinery is good and the building should be kept in good repair.

At the New York yard.

For timber-shed	$80,754
For timber and knee basin	122,732
For retaining crib-work at Washington avenue	84,497
Total	287,983

The object of first importance and necessity at this yard is an increase in the accommodations for the storage of timber and plank, large quantities of which are now in the yard, unprotected from the effects of the weather and subject to rapid decay. The loss occasioned by the deterioration of this valuable and costly material would soon equal the cost of the building, and the early construction of this shed would therefore be a matter of economy.

The accumulation of large quantities of very valuable live-oak timber, by the annual deliveries at this yard, constantly increases the necessity for a proper place for its deposit and protection from the damaging effects of exposure. This timber requires water-seasoning, and the present dock is entirely too limited in extent to receive the timber now on hand, and consequently much of it is exposed to the weather, besides occupying valuable space in the yard much needed for other purposes. It is hoped that the appropriation for extending this basin will be made.

Retaining crib-work along boundary-line from the channel to Washington avenue.—The length of this line is 760 feet, and borders on a slip 70 feet wide, belonging to the city of Brooklyn. The authorities of that city and the harbor-commissioners have complained, and still complain, that the alluvium from this unprotected water-front of the Government lands is constantly passing into their slip, and also into the channel, and obstructing general navigation in that quarter. It is to obviate these complaints, and to protect and improve the Government property, that an appropriation is asked for this object. It is proposed to construct a crib-work 60 feet within the Government line, by which arrangement a slip 60 feet wide will be secured, and the inside of the crib-work would form the northerly boundary of the timber-basin, and upon which timber could be landed in close proximity to the basin. The object is a very important one, and would add greatly to the protection and usefulness of that section of the yard.

At League Island, Pennsylvania.

For commencing quay-wall on Delaware front	$137,500
For commencing floating-dock basin	413,300
For grading, graveling, and paving	95,000
For embankments	5,000
For temporary roads and tracks	5,000
Total	655,800

In executing the plan proposed for the development of this yard, one of the first objects of improvement will be the construction of a permanent quay-wall along the Delaware front; this will protect the yard

from inundation in that quarter, provide landing-places for materials and berths for vessels; and the early commencement of its construction is regarded of great importance, as it is a work of great magnitude and will require large appropriations and much time for its entire completion.

The commencement of the floating dock basin is a work that should be provided for at once, as there are no means at present by which access can be had to the bottoms of vessels requiring repairs. We have a floating-dock at the yard, but there is no place yet prepared for its use, and, unless an appropriation is made at once to secure a proper place for its operation, the dock will remain useless and subject to great deterioration.

The amount asked for grading, graveling, and paving is much needed; about twenty-nine acres have been filled in from the excavations in the back channel, and the material is of such a character as to require a covering of gravel, and the streets and avenues require paving to render them passable in wet seasons.

The small amount asked for embankments is absolutely necessary to keep them in a proper state of security. The failure of these embankments during the freshets caused the overflow of the large part of the island, which is attended with great expense and delay in the construction of the improvements authorized.

The present condition of the surface of the yard is such as to preclude the possibility of heavy hauling without the aid of rail-tracks. Quite a large amount of these tracks has been laid with great advantage and economy to the Government, and their extension and repair is indispensable for the transportation of all the large quantities of materials required in the construction of the various works of improvement.

At Norfolk navy-yard.

For construction of timber-shed No. 32	$53,306
For construction of timber-shed No. 33	53,306
Total	106,612

The small amount of accommodations for the storage and protection of timber at this yard is a source of great loss and inconvenience. Very large quantities of costly and valuable timber have been accumulated here for future use, most of which is exposed to the weather and subject to rapid decay. This timber cannot always be readily obtained when wanted, and it is a wise policy to keep a good stock on hand, that it may be thoroughly seasoned when needed for use. These appropriations are regarded as of great importance and necessity.

At the Pensacola navy-yard.

For timber-shed No. 11	$38,357

This timber-shed is much needed for the protection of timber and lumber belonging to the Bureau of Yards and Docks. This bureau has barely storage-space for the protection of a small quantity of planed lumber; all its rough timber and lumber is exposed alternately to the rays of the sun and the heavy rains, which in this climate causes rapid decay and much loss.

The cost of this building would soon be saved by a proper protection of the material from the effects of the weather, which are very damaging.

At the navy-yard, Mare Island.

For continuation of stone dry-dock	$650,000
For removal of gas-holder and gas-works	6,750
For completing reservoir and water-pipes	37,297
For roads and pavements	68,000
For dredging channels	40,000
For commencing quay-wall and wharves	100,000
Total	902,047

In consequence of the very insufficient appropriation for the dry-dock last year, it has progressed but little beyond the mere provision of the granite of the floor, and with this exception it remains in about the same condition it was in at the date of the last annual report.

The appropriation for the present fiscal year is, in proportion to what the completion of this great and expensive work will cost, a very small one, being barely sufficient to protect the works during the year; consequently, it cannot be presumed to be much forwarded by this trifling sum. The reasons for asking for and recommending a liberal amount for carrying it vigorously on in future are very obvious. The peculiar circumstances under which a dry-dock must be built render its construction one of much risk, and therefore demand, for its avoidance as far as possible, prompt and continuous operations. The whole foundation and a very large portion of its masonry resting upon a level many feet below tide-water, require protection, while being laid, by a coffer-dam of a necessarily temporary character, the continuation of which is not calculated upon except for about the time that its use ought to be required in the uninterrupted construction of the work it is intended to secure. Its iron fastenings are exposed to the corrosive action of salt water, and thus, sooner or later, must become too weak for its safety. Other influences, of water-pressure, the action of waves, and general wear and tear in the course of time, must add their impairing effects and impose the necessity of continued repairs, the cost of which increases in proportion to the length of time such structures are maintained. If, in consequence of the want of proper appropriations, the completion of this work is delayed until this coffer-dam should so far deteriorate as to give way under the pressure imposed upon it, the consequences would be very disastrous and involve a serious loss to the Government.

It seems proper to state, as an additional reason for the speedy completion of this work, that the sectional wooden dock, on which we at present solely depend for docking vessels, cannot be relied upon much longer without very extensive repairs, if not absolute renewal. In either case the cost of such work must be great, and wisdom would seem to dictate its prevention by carrying the stone dock at once to completion for use.

With these views, the Bureau strongly urges the provision of sufficient means for pushing the work during the coming fiscal year, as far as it can be carried. If the stone for the entrance can be provided and laid and the caisson furnished, the structure can be put in a suitable state for completion the following year, provided the remaining necessary funds are then furnished.

REMOVAL OF GAS-HOLDER AND GAS-WORKS.

The location of the stone dock, pumping house, and well, between the wings of the smithery No. 69, as recommended in the report of the

board of civil engineers, of November 19, 1873, necessitates the r moval of the present gas-holder, which is situated on these premises. is proposed to remove the whole of the gas-works to block No. 51, whic by the engineers' report is assigned for such purposes. The estima includes a convenient but temporary building, and the use of the pre ent works, as it is believed they will serve until a more extensive ar permanent establishment can be provided.

COMPLETING RESERVOIR AND WATER-PIPES.

These works having been already commenced and progressed to near the completion of the reservoir, there remains only the furnishing an laying down of the main and service pipes, and the provision of th pumping-works, to complete the system designed.

The entire absence of springs and reliable wells on this island ren dered a resort to artificial means for storing the water afforded by th winter rains a necessity, as well as an economical arrangement. Th cisterns in the yard will contain only about one month's supply, an after they are exhausted we are dependent upon outside sources, whic are expensive and uncertain.

The appropriation for this object is regarded as of great importanc both on account of economy and safety. Should fire occur in the yar we must depend entirely on our own fire-department, which is qui limited, as no aid could be obtained from outside, and the result wou probably be very disastrous to the Government.

ROADS AND PAVEMENTS.

The want of good roads as well as an adequate water-supply has lon been severely felt at this yard, and no improvements are more neede than these; without them all others lose a great part of their efficienc In wet weather, owing to the natural quality of the soil whereon th yard-routes of travel lie, they become almost impassable to teams, an many important points are inaccessible, owing to the prevalence of dee mud. This appropriation is one of great importance and necessity, an is strongly urged by the bureau.

DREDGING AND SCOWING.

For maintaining a proper depth of water in the vicinity of the wharve and at the landings, the operation of dredging is indispensable; its effi ciency and economy, however, may be greatly increased by the adoptio of some system that will utilize the excavated material by depositing i upon the tule-lands belonging to the island, instead of towing it severa miles and dumping it overboard, to be again deposited in the channel With the view of providing suitable machinery and apparatus to secur this desirable end, the bureau submits this estimate and urges the a propriation.

COMMENCING QUAY-WALL AND WHARVES.

The location and system of quay-walls as recommended by t board of civil engineers ought to be at once undertaken, not o for the purpose of supplying the necessities of the national sh ping, but for the maintenance of the yard water-front and its pro channel. An improvement of this kind must be considered fundame for the essential purposes of a navy-yard, and should be underta in the early stages of its development and continued until a reason

provision is made to meet the demands which are likely to arise in the future. The present irregular water-front causes eddies and deposits, and this renders the almost constant use of dredging machines a necessity. With a straight line of quay-wall, presenting no obstructions to the natural currents of the river, as is now proposed, it is confidently believed that the currents sweeping along this uninterrupted line will scour the bottom and give a line of wharfage accessible at all times.

This is one of the most important objects for which appropriations are asked. It is a work of great magnitude, will require several years for its entire completion, and should be commenced as soon as possible.

REPAIRS AND PRESERVATION.

The amounts submitted under this head—$809,042—are those which have been furnished from the various yards and stations, and are believed to be no more than are necessary for the proper care and preservation of the large amount of public property committed to the charge of this bureau. For several years past, and especially for the present fiscal year, the appropriations have not been sufficient to meet all the demands upon them, and consequently some of the large and expensive buildings have suffered for want of timely repairs.

GENERAL MAINTENANCE.

The amounts submitted under this head—$862,029—are in accordance with the estimates furnished from the different yards and stations. They are based upon past experience of the demands under the numerous items of expenditure. And though considerably larger than the appropriation for the present fiscal year, which was unusually small, they are not larger than the appropriations under this head in former years. The pay of watchmen at the several yards is an unavoidable expense, and amounts to nearly one-fourth the appropriation asked for. Other necessary expenses, such as purchase and maintenance of teams, carts, &c., timber-wheels, coal, and other fuel, candles, oil, and gas, cleaning and clearing up yards, attendance on fires, fire engines and apparatus, and water-tax, amount to a large sum, which cannot be curtailed without detriment to the public interests.

CIVIL ESTABLISHMENT.

The estimates for this branch of the service—$64,280—are believed to be no larger than necessary to secure the services of proper and efficient persons to perform the important duties imposed upon them. Many of these duties are arduous, and require for their proper discharge men of ability, intelligence, industry, and integrity.

CONTINGENT.

This fund is to defray the expense of any unforeseen casualty which may occur during the fiscal year, and its expenditure is carefully guarded. The amount—$50,000—is small, and will not be used unless demanded by actual necessity.

NAVAL ASYLUM.

The amount estimated for this institution for pay of attendants, support of beneficiaries, and necessary repairs of buildings, furniture, fur-

naces and grates, cemetery, and care of public grounds is $63,597, amount is by law paid out of Navy pension fund.

Accompanying this report is an abstract of offers for supplies rec for furnishing articles coming under the cognizance of the Bur Yards and Docks, made in conformity to the act of Congress app March 3, 1843.

The following estimates for the fiscal year ending June 30, 187 respectfully submitted:

Sheet No. 1. For support of Bureau Yards and Docks.....	$1
Sheet No. 2. For general maintenance of yards and stations, and for contingent.....	91
Sheet No. 3. For support of Naval Asylum.....	6
Sheet No. 4. For repairs and preservation	80
Sheet No. 5. For improvements at navy-yards.....	2,09
For civil establishment.....	6
Total estimates for Bureau Yards and Docks.....	3,95

I am, sir, very respectfully, your obedient servant,

J. C. HOWELL,
Chief of Bur

Hon. GEORGE M. ROBESON,
Secretary of the Navy.

Estimates of appropriations required for the service of the fiscal year ending June 30 by the Bureau of Yards and Docks, Navy Department.

Detailed objects of expenditure, and explanations.	Estimated amount which will be required for each detailed object of expenditure.	Amount appropri-
SALARIES.		
Civil engineer, per act of March 3, 1863	$3,000	....
Chief clerk, per act of July 5, 1862	1,800	
Draughtsman and clerk, per act of March 2, 1867	1,800	
One clerk of class four, per act of March 2, 1867	1,800	
Two clerks of class three, per act of March 2, 1867	3,200	
One clerk of class two, per act of March 2, 1867	1,400	
One clerk of class one, per act of March 2, 1867	1,200	
One messenger, per acts of July 5, 1862, and July 12, 1870	840	
Two laborers, at $720 each, per acts of July 5, 1862, and July 12, 1870	1,440	
	16,480	
CONTINGENT EXPENSES.		
Stationery, books, plans, drawings, incidental labor, and miscellaneous items	1,800	
FOR GENERAL MAINTENANCE OF YARDS AND DOCKS.		
For general maintenance of yards and docks, freights, and transportation of materials and stores; printing, stationery, and advertising, including commandant's office; books, maps, models, and drawings; purchase and repair of fire-engines; machinery, and patent-right to use the same; repairs of steam-engines and attendance on the same; purchase and maintenance of oxen, horses, and driving-teams; carts and timber-wheels for navy-yard purposes; tools and repairs of the same; postage on letters and other mailable matter on public service, and telegrams; furniture for Government houses and offices in navy-yards; coal and other fuel; candles, oil, and gas; cleaning and clearing up yards, and care of public buildings; attendance on fires, lights, fire-engines and apparatus; incidental labor at navy-yards; water-tax; tolls and ferriages; pay of watchmen in navy-yards; awnings and packing-boxes for yards and docks purposes ..	862,029	

Estimates of appropriations required for the service, &c.—Continued.

Detailed objects of expenditure, and explanations.	Estimated amount which will be required for each detailed object of expenditure.	Amount appropriated for the current fiscal year ending June 30, 1877.
CONTINGENT.		
For contingent expenses that may arise at navy-yards and stations	$50,000	$20,000
NAVAL ASYLUM, PHILADELPHIA, PA.		
Superintendent	600	.....
Steward	480	.....
Matron	360	.....
Cook	240	.....
Assistant cook	168	.....
Chief laundress	192	.....
Three laundresses, at $168 each	504	.....
Eight scrubbers and waiters, at $168 each	1,344	.....
Six laborers, at $240 each	1,440	.....
Stable-keeper and driver	360	.....
Master-at-arms	480	.....
Corporal	300	.....
Barber	360	.....
Carpenter	845	.....
	7,673	7,673
For water-rent and gas	1,975	.....
For cemetery, head-stones, digging graves, &c	350	.....
For repairs of buildings and improving grounds, grates, &c	7,325	.....
For ice and car-tickets	450	.....
For furniture and repairs of same	500	.....
For support of beneficiaries	45,324	.....
	55,924	50,504
	63,597	58,177
NOTE.—The expenses of the Naval Asylum to be paid from income of the "Navy pension fund," in compliance with provisions of act of March 1, 1869, (15 Statutes, 277.)		
NAVY-YARD, BOSTON, MASS.		
For boundary-wall	52,434	.....
For yards and docks' blacksmith-shop	10,552	.....
For tracks and cars	5,000	.....
For new floor to rope-walk	32,269	.....
	100,255	.....
NAVY-YARD, NEW YORK.		
For timber-shed	80,754	.....
For timber and knee basin	122,732	.....
For retaining crib-work at Washington avenue	84,497	.....
	287,983	.....
NAVY-YARD, LEAGUE ISLAND, PA.		
For commencing quay-wall on Delaware front	137,500	.....
For commencing dry-dock basin	413,300	.....
For grading, graveling, and paving	95,000	.....
For embankments	5,000	.....
For temporary roads and tracks	5,000	.....
	655,800	.....
NAVY-YARD, NORFOLK, VA.		
For timber-shed No. 32	53,306	.....
For timber-shed No. 33	53,306	.....
	106,612	.....
NAVY-YARD, PENSACOLA, FLA.		
For timber-shed No. 11	32,357	.....

Estimates of appropriations required for the service, &c.—Continued.

Detailed objects of expenditure, and explanations.	Estimated amount which will be required for each detailed object of expenditure.	Amount appropriated for the current fiscal year.
NAVY-YARD, MARE ISLAND, CAL.		
For continuation of stone dry-dock	$650 000	$50, 0
For removal of gas-holder and gas-works	6, 750	.....
For completing reservoir and water-pipes	37, 297	.....
For roads and pavements	68, 000	.....
For dredging and scowing	40 000	.....
For quay-wall and wharves	100, 000	.....
	902, 047	50, 0
	2, 091, 154	50, 0
NAVY-YARD, PORTSMOUTH, N. H.		
Repairs and preservation at navy-yard	58, 750	.....
NAVY-YARD, BOSTON, MASS.		
Repairs and preservation at navy-yard	109, 000	.....
NAVAL STATION, NEW LONDON, CONN.		
Repairs and preservation at navy-yard	3, 469	.....
NAVY-YARD, NEW YORK, N. Y.		
Repairs and preservation at navy-yard	134, 500	.....
NAVY-YARD, LEAGUE ISLAND, PA.		
Repairs and preservation at navy-yard	60, 000	.....
NAVY-YARD, WASHINGTON, D. C.		
Repairs and preservation at navy-yard	53, 475	.....
NAVY-YARD, NORFOLK, VA.		
Repairs and preservation at navy-yard	111, 674	.....
NAVY-YARD, PENSACOLA, FLA.		
Repairs and preservation at navy-yard	98, 445	.....
NAVY-YARD, MARE ISLAND, CAL.		
Repairs and preservation at navy-yard	159, 000	.....
NAVAL STATION, SACKETT'S HARBOR, N. Y.		
Repairs and preservation at navy-yard	2, 000	.....
NAVAL STATION, KEY WEST, FLA.		
Repairs and preservation at navy-yard	18, 639	.....
	809, 042	100, 0

ABSTRACT OF OFFERS FOR SUPPLIES RECEIVED FOR FURNISHING ARTICLES COMING UNDER THE COGNIZANCE OF THE BUREAU OF YARDS AND DOCKS, MADE IN CONFORMITY TO THE ACT OF CONGRESS APPROVED MARCH 3, 1843.

Offers for iron castings for United States navy-yard at League Island, Pa., under date of advertisements of July 12, 1875.

100,000 pounds iron castings:

		Cents.
Potter & Hoffman	per lb.	3¼
Thos. Ellis & Bro	per lb.	3
Royer Bros.	per lb.	2 9/10
Devenney, White & H.	per lb.	2¾
Wood, Dialogue & Co.	per lb.	3⅛
D. S. Cresswell	per lb.	*2⅛
J. Wood, jr., & Co	per lb.	2⅞

100,000 pounds iron castings—Continued.

		Cents.
Morris, Tasker & Co.	per lb.	3⅝
S. J. Cresswell, jr.	per lb.	2⅞
Barrows, Savery & Co.	per lb.	2 24/100
W. E. Tanner & Co.	per lb.	3½
Phila. Arch'l Iron Co.	per lb.	2¾
Conrad & Murray	per lb.	3⅛

Offers for supplies for United States navy-yard at Mare Island, Cal., under advertisement of August 4, 1875.

Lumber:

William Walker	$6,237 72
A. Powell	6,473 00

Lumber—Continued.

Pope & Talbot	$6,956 00
J. E. de la Montagnie	*5,760 00

Offers for supplies for United States navy-yard at Mare Island, Cal., under advertisement of September 9, 1875.

Lumber:

Jas. E. de la Montagnie	$3,704 75
A. Powell	*3,437 50
Pope & Talbot	3,929 75

Lumber—Continued.

Charles Hare	$4,356 00
William Walker	4,033 00

Offers for supplies for United States navy-yard at Mare Island, Cal., under advertisement of September 22, 1875.

Lumber:

Charles Hare	$199 10
Pope & Talbot	*166 32
A. Powell	183 94

Lumber—Continued.

J. E. de la Montagnie	$186 95
William Walker	176 08

ABSTRACT OF OFFERS FOR SUPPLIES RECEIVED FOR FURNISHING ARTICLES COMING UNDER THE COGNIZANCE OF THE BUREAU OF YARDS AND DOCKS, MADE IN CONFORMITY TO THE ACT OF CONGRESS APPROVED MARCH 3, 1843.

Offers for causeway at the League Island navy-yard, Pennsylvania, under advertisement dated January 4, 1876.

Austin P. Brown	*$17,900
American Dredging Co.	21,302
J. Powell & Son	$21,497

Opened February 1, 1876, in presence of—
J. C. HOWELL, *Chief of Bureau.*
W. P. S. SANGER, *Civil Engineer of Bureau.*
A. E. MERRITT, *Chief Clerk of Bureau.*
FRANKLIN A. STRATTON, *Civil Engineer, League Island.*
D. J. PARTELLO, *Clerk Bureau Yards and Docks.*

*Accepted.

Offers for supplies for United States navy-yard at League Island, Pa., under advertisem August 3, 1876, for lumber, rope, oil, &c.

Lot No. 1. Lumber:

S. G. M. Maule	$1,300 00
S. P. Brown	1,310 00
William L. Loyd & Co	1,450 00
J. W. Gaskill & Sons	*1,047 50
Benton & Bro	1,390 00

Lot No. 2. Rope:

Paul J. Field	$254 97
Uhler, English & Boileau	235 20
John T. Bailey & Co	232 26
Hammill & Stubs	*230 51
E. H. Fitler & Co	234 48
Darrah & Elwell	254 72

Lot No. 3. Oil:

Paul J. Field	$85 60

Lot No. 3. Oil—Continued.

Darrah & Elwell	*$

Lot No. 4. Lumber:

S. G. M. Maule	$6
S. P. Brown	*5
J. W. Gaskill & Sons	5
William L. Loyd & Co	7
Benton & Bro	5

Lot No. 5. Lumber:

S. G. M. Maule	$5
S. P. Brown	*4
J. W. Gaskill & Sons	4
William M. Loyd & Co	5
Benton & Bro	4

Offers for two hundred tons Lehigh coal for League Island navy-yard, under advertisem August 23, 1876.

Bidders:	Per ton.
Lehigh & Wilkesbarre Coal Co.	$4 35

Bidders—Continued.	Pe
Campbell Tucker & Co	*

Offers for supplies for the United States navy-yard, New York, under advertisement date gust 24, 1876.

Class No. 27. 350 tons anthracite coal, for steam-boilers:

	Per ton.
Samuel G. French	†$3 17
D. Babcock & Co	3 25
W. Merritt	3 80
J. H. Redfield	3 95
James D. Leary	4 14

Class No. 27. 80 tons anthracite coal, stove-size:

Samuel G. French	†$3 90
D. Babcock & Co	3 97
W. Merritt	4 35

Class No. 27. 80 tons anthracite coal, stove-size—Continued.

	P
J. H. Redfield	
James D. Leary	

Class No. 27. 50 tons anthracite coal, egg-size:

Samuel G. French	†
D. Babcock	
W. Merritt	
J. H. Redfield	
James D. Leary	

*Accepted. †Accepted, being the lowest in the aggregate.

Offers for supplies for the Naval Asylum, Philadelphia, Pa., under advertisement dated August 29, 1876.

Class No. 1. Clothing:

Wannamaker & Brown	*$5,204 00
Jacob Reed	5,283 60

Class No. 2. Boots and shoes:

James Cotter & Sons	$2,181 25
Wannamaker & Brown	2,253 75
W. McKnight	*2,062 50

Class No. 3. Provisions:

Gibbons & Wallace	$10,142 00
William Godfrey	10,210 50
Gotlieb Scheidt	9,689 90
Harry H. Corney	10,345 60
John Brenn	*9,429 20

Class No. 4. Groceries:

Hill & Brother	$7,149 54
Anderson & Dunlap	7,469 10
Robert McKeown	*6,914 70

Class No. 5. Dry goods:

George Milliken	$*545 75

Class No. 6. Bread:

George C. Ellenger	$2,075 00
John McIlwain	1,630 00
Gordon Nealis	1,509 00
James Park	*1,408 25

Class No. 7. Tobacco:

J. Rinalde Sauk & Co.	*$1,104 00
Paul J. Field	1,127 00

Class No. 8. Coal and wood:

William F. Moody	*$1,718 50
Robert Murray Chaton	1,997 50
Campbell, Tucker & Co.	1,842 00

Class No. 9. Paints, oils, &c.:

J. B. Shannon	*$636 42
Bellah & Elliott	649 92
William Waterall & Co.	†611 37

Class No. 11. Lumber:

S. G. M. Maule	$796 75
J. W. Gaskill & Sons	*655 15

Class No. 13. Provender:

Paul J. Field	*$198 60

Class No. 14. Miscellaneous:

J. B. Shannon	*$380 95
Paul J. Field	7,819 85

Class No. 15. Hardware:

J. B. Shannon	$285 58
Paul J. Field	*282 58
Bellah & Elliott	293 52

We certify that the above proposals were opened in our presence; that the scale is correct; and the contracts have been awarded to the lowest bidders, according to the advertisements.

BUREAU OF YARDS AND DOCKS, *September* 26, 1876.

J. C. HOWELL, *Chief of Bureau.*
W. P. S. SANGER, *Civil Engineer of Bureau.*
A. E. MERRITT, *Chief Clerk of Bureau.*
R. H. YEATMAN, *Clerk Class* 3.

Offers for supplies for the United States navy-yard, New York, under advertisement dated September 2, 1876.

Class No. 20. Hay:

E. R. Shipman	*$1,232 00

Class No. 20. Hay—Contin'd.

J. H. Redfield	$1,247 50

Offers for supplies for the United States navy-yard, League Island, Pa., under advertisement dated September 2, 1876.

Class No. 1. Stationery:

William H. Dempsey	*$570 79
R. Magee & Sons	747 40
James W. Queen & Co.	882 77
Walstrun & Stevens	704 67

Class No. 2. Drawing materials:

W. H. Dempsey	*$241 80
James W. Queen & Co.	297 25

* Accepted. † Received too late.

Offers for material and labor for storehouse, extension of main wharf, storage and m building, furnishing and driving piles for saw-mill and wharf, at the navy-yard, Island, under advertisements dated September 7, 1876.

For steam-engineering storehouse:

Nathaniel McKay	$14,938 00
Austin P. Brown	24,891 00
S. H. & J. H. Adams	14,835 00
Philip Quigley & Son	*13,300 00
Peters & Burger	24,720 00
J. M. Mays & Co	19,986 00
William W. Upp	17,990 00

For extension of main wharf:

Austin P. Brown	$18,699 00
J. M. Mays & Co	*17,167 00
American Dredging Co	19,913 90
William W. Taxis	31,934 00
James L. Atkinson	25,484 83

For storage and mold-loft building:

Hiram Miller	$29,313 00

For storage and mold-loft building—Continued.

John Crump	$12,
Nathaniel McKay	13,
Austin P. Brown	26,
S. H. & J. H. Adams	13,
Philip Quigley & Son	*12,
Peters & Burger	18,
William W. Upp	13,

For furnishing and driving piles for saw-mill, and furnishing all materials and labor for wharf:

Austin P. Brown	*$9,
American Dredging Co	9,
William W. Taxis	†5,
James Westcott & Son	‡9,
James L. Atkinson	9,

We certify that the above proposals were opened in our presence, that the correct, and that the contracts have been awarded to the lowest bidders accor the advertisements.

J. C. HOWELL,
Chief of B
W. P. S. SANGEI
Civil Engineer, Bureau Yards and I
A. E. MERRITT,
Chief Clerk of B
D. J. PARTELL(
Clerk of C

BUREAU OF YARDS AND DOCKS, *September* 30, 1876.

Offers for supplies for the United States navy-yard, Washington, D. C., under adve dated September 13, 1876.

Class No. 20. Provender:

Frank Dorsey	*$1,312 48
C. T. Yoder	1,717 50
Barbour & Hamilton	1,535 25
Jos. L. Savage	§1,105 50

Class No. 23. Hose:

D. Babcock	$1,372 70
Walton Brothers	1,596 00
J. D. Cummings	*1,356 00

Class No. 23. Hose—Continued.

T. M. Shepherd	$
Joseph L. Savage	†

Class No. 29. Bituminous (Cumberland) coal:

T. W. Riley & Sons	
Johnson Brothers	
T. E. Clark & Co	
C. T. Yoder	
Joseph L. Savage	
A. Greenlees, jr	

* Accepted. † Declined. ‡ For wharf only. § Informal.

Offers for plowing, sowing, harrowing, and rolling about 300 acres of land on Mare Island, Cal., under advertisement dated September 18, 1876.

Name of bidder.	Plowing dry, per acre.	Plowing after rain, per acre.	Hauling and spreading manure per load.
George Rounds	$6 00	$4 75	$0 50
W. E. King	4 00	.....	†35 00
J. Driscoll	3 75	.....	25
G. Fitzmaurice	3 25	.....	10
John O'Neal and James Costello	*2 95	.....	20

Offers for supplies for the United States navy-yard, League Island, Pa., under advertisement dated September 18, 1876.

Class No. 5. Oak and hard wood:

A. Benton & Brother	$347 50
J. W. Gaskill & Son	*300 00

Class No. 6. White pine, &c.:

A. Benton & Brother	$384 00
J. W. Gaskill & Son	*317 00

Class No. 7. Lime:

Cedar Hollow Lime Co	$63 00
Paul J. Field	‡ *63 00

Class No. 8. Cement:

Lesley & Trinkle	§$329 00
Paul J. Field	*475 50

Class No. 9. Gravel and sand:

Paul J. Field	*$111 00

Class No. 11. Iron spikes and nails:

Bellah & Elliott	*$125 00
Paul J. Field	142 00

Class No. 12. Steel:

Midvale Steel Works	*$46 75
Noblitt, Brown, N., & Co.	55 00
Paul J. Field	59 00

Class No. 14. Files:

Bellah & Elliott	$90 88
Noblitt, Brown, N., & Co.	109 45
Paul J. Field	*81 50

Class No. 15. Paints, oils, and glass:

Bellah & Elliott	$231 20
W. Waterall & Co	*221 50
Noblitt, Brown, N., & Co.	234 45

Class No. 16. Ship-chandlery:

Noblitt, Brown, N., & Co.	*$396 35
Paul J. Field	431 15

Class No. 17. Hardware:

Bellah & Elliott	$944 26
Noblitt, Brown, N., & Co.	874 46
Paul J. Field	*823 85

Class No. 20. Hay:

Paul J. Field	*$788 00

Class No. 21. Provender:

Paul J. Field	*$468 00

Class No. 22. Charcoal:

Paul J. Field	*$17 50

Class No. 24. Oils:

Noblitt, Brown, N., & Co.	*$211 00

Class No. 25. Iron-work, piping, &c.:

Paul J. Field	*$52 50

Class No. 27. Anthracite coal:

No bids received.

Class No. 29. Bituminous Cumberland coal:

No bids received.

Class No. 32. Machinery and tools:

J. A. Fay & Co	*$1,334 00
Paul J. Field	1,840 00

* Accepted. † Incomplete. ‡ Decided by lot. § Per lot.

Offers for supplies for the United States navy-yard, Mare Island, Cal., under advertis dated September 21, 1876.

Class No. 5. Lumber:

William Walker	$919 75
A. Powell	†870 00

Class No. 11. Nails:

William Walker	$
A. Powell	*

Offers for supplies for the United States navy-yard, Norfolk, Va., under advertisement September 23, 1876.

Class No. 4. Yellow pine:

A. A. McCullough	*$750 00

Class No. 11. Round iron, &c.:

E. V. White & Co	$41 10
Holmes & Co	43 50
Taylor, Elliott & Waters	47 40
Forbes & Butts	*39 90

Class No. 5. Walnut:

A. A. McCullough	*$44 00

Clas No. 11. Iron spikes, nails, &c.:

E. V. White & Co	*$26 75
Holmes & Co	32 75
Taylor, Elliott & Waters	37 50
Forbes & Butt	30 25
D. K. Osbourn	83 56

Class No. 14. Files:

E. V. White & Co	$39 99
Holmes & Co	47 15
Taylor, Elliott & Walters	49 75
Forbes & Butt	*36 85
D. K. Osbourn	52 54

Class No. 16. Cotton-waste, &c.:

E. V. White & Co	*$12 40
Holmes & Co	15 00
Taylor, Elliott & Waters	16 50
Forbes & Butts	12 95
D. K. Osbourn	27 25

Class No. 17. Hardware, &c.:

E. V. White & Co	$19 65
Holmes & Co	*18 35
Taylor, Elliott & Waters	27 80
Forbes & Butts	19 65
D. K. Osbourn	46 18

Class No. 18. Stationery:

Vickery & Co	$5
D. K. Osbourn	*4
W. H. Dempsey	44

Class No. 20. Hay, &c.:

Peters Bros	*$30
A. A. McCullough	36

Class No. 21. Provender:

A. A. McCullough	*$29
Peters Bros	32

Class No. 23. Gum, Packing, &c.:

E. V. White & Co	*$1
Holmes & Co	1
Taylor, Elliott & Waters	1
Forbes & Butts	1
D. K. Osbourn	2

Class No. 24. Lard oil:

E. V. White & Co	*$1
Holmes & Co	1
Forbes & Butts	1
D. K. Osbourn	2

Class No. 15. White lead, zinc, &c.:

E. V. White & Co	$
Holmes & Co	
Forbes & Butts	
D. K. Osbourn	*

Class No. 17. Hardware, &c.:

E. V. White & Co	$
Holmes & Co	
Taylor, Elliott & Waters	
Forbes & Butts	*
D. K. Osbourn	

*Accepted. †Accepted, being the lowest in the aggregate.

Offers for supplies for United States navy-yard at League Island, Pa., under advertisement dated October 18, 1876.

Class No. 1. Brick:

Benjamin Allen	*$592 00

Class No. 2. Lime:

Benjamin Allen	$1,140 00
Paul J. Field	1,170 00
Morris & Budd	*1,050 00
Cedar Hollow Lime Co.	1,188 00

Class No. 3. Hydraulic cement:

Benjamin Allen	*$244 00
Lesley & Trimble	290 00
Paul J. Field	398 00
Morris & Budd	600 00
David Babcock & Co.	308 00
J. G. & J. M. Waters	318 00
S. M. Hamilton	380 00

Class No. 4. Building-sand:

Benjamin Allen	*$414 00
Paul J. Field	534 00
Abel Jeanes	1,020 00

Class No. 5. Cast-iron columns, plate-iron girders, and iron I-beams:

David Babcock & Co.	$20,492 80
Potter & Hoffman	21,395 00
H. A. Ramsey	21,742 30
William B. Scaife & Sons	19,584 50
Phœnix Iron Company	*17,772 50
Philadelphia Arch Iron Company	20,403 00
Edgemore Iron Company	18,096 60
New Jersey Steel and Iron Company	19,432 30

Opened in the presence of—
J. C. HOWELL,
Chief of Bureau.
W. P. S. SANGER,
Civil Engineer, Bureau Yards and Docks.
A. E. MERRITT,
Chief Clerk Bureau.
D. J. PARTELLO,
Clerk Class 4.

Offers for supplies for United States navy-yard at League Island, Pa., on requisitions Nos. 56 57, and 58, October 25, 1876.

Requisition No. 56. Spikes, &c.:

Paul J. Field	$238 00
Noblit, Brown, N., & Co.	†199 76
J. B. Shannon	*234 70

Requisition No. 57. Window-glass, &c.:

B. H. Shoemaker, in part, glass	$40 00	
Robert Shoemaker & Co., in part	99 50	
		$139 50

Requisition No. 57. Window-glass, &c.—Continued.

Noblit Brown, N., & Co.	$142 88
Russell & Landis	138 85
W. F. Simes & Son	124 00
U. S. Lead Co.	*123 85

Requisition No. 58. Spikes, &c.:

Paul J. Field	*$133 25
Noblit Brown, N., & Co., (wrought bolts)	161 11
J. B. Shannon	137 25

*Accepted. †Incomplete.

Offers for supplies for United States navy-yard at League Island, Pa., on requisitions 51, 52, 53, 54, and 55, October 25, 1876.

Requisition No. 50. Hinges, &c.:

Paul J. Field	$115 00
Noblit, Brown & Co.	139 36
J. B. Shannon	*114 40

Requisition No. 51. Japan drier, &c.:

W. F. Simes & Son	$110 35
Paul J. Field	72 10
Noblit, Brown, N., & Co.	†*72 10

Requisition No. 52. White zinc in oil:

W. F. Simes & Son	$50 00
Noblit, Brown, N., & Co.	55 00
Russell & Landis	51 25
Felton, Ran & Sibley	*47 50
United States White-Lead Company	48 12

Requisition No. 53. Window-glass, &c.:

W. F. Simes & Son	$291 80
Noblit, Brown, N., & Co.	319 35

Requisition No. 53. Window-glass, &c.—Continued.

Russell & Landis	
Felton, Ran & Sibley	
United States White-Lead Company	

Requisition No. 54. Gouges, &c.:

Paul J. Field	
Noblit, Brown, N., & Co.	
J. B. Shannon	

Requisition No. 55. Window-glass, &c.:

Noblit, Brown, N., & Co.	
Russell & Landis	
Felton, Ran & Sibley	
Benj'n H. Shoemaker, in part only, glass	$155 00
Robert Shoemaker & Co., in part only	94 10
United States White-Lead Company	

Offers of supplies for the United States navy-yard at Mare Island, Cal., under adver dated October 31, 1876.

Requisition No. 24. Gasoline and plow:

F. B. Taylor & Co.	*$383 50

Requisition No. 25. Upholstering materials:

Coffin & Hendry	*$315 65
James E. Gordon	317 05

Requisition No. 26. Lumber:

A. Powell	*$327 50
William Walker	351 50

Requisition No. 27. Hardware:

James E. Gordon	*$244 50
W. M. Rockwell	311 79
Coffin & Hendry	313 32
Dunham, Carrigues & Co.	462 15

Requisition No. 28. Miscellaneous:

James E. Gordon	*$145 00
Coffin & Hendry	158 00

Requisition No. 29. Stone and gravel:

A. Powell	†*
Thomas Rodgers	

Requisition No. 30. Hardware:

James E. Gordon	*
W. M. Rockwell	
Coffin & Hendry	
Dunham, Carrigues & Co.	

Requisition No. 31. Hardware:

James E. Gordon	
Coffin & Hendry	
W. M. Rockwell	
Dunham Carrigues & Co.	

Requisition No. 32. Iron:

James E. Gordon	
W. M. Rockwell	
Coffin & Hendry	
Dunham, Carrigues & Co.	

*Accepted. † Decided by lot. ‡ Inform

Offers for supplies for United States navy-yard at Portsmouth, N. H., under advertisement dated November 6, 1876.

Hay, per ton:	
George H. Hayes	*$17 69
Lewis & Brooks	20 00
C. W. Cottle	19 00
G. H. Hammond	20 00
Straw, per ton:	
Lewis & Brooks	20 00
Steven Grant	*11 50
C. W. Cottle	$15 00
G. A. Hammond	18 00
Corn-meal, per bushel:	
Lewis & Brooks	*73½
Hill & Stover	97½
Geo. Getchel	84
C. W. Cottle	80
I. Brooks	74
Thomas Neal	74

Offers for supplies for United States navy-yard at League Island, Pa., under advertisement dated November 10, 1876, on requisitions Nos. 62, 63, 64, and 65.

Requisition No. 62. White-lead, &c.:	
United States White-Lead Company	*$130 60
Felton, Ran & Sibley	131 80
Requisition No. 63. Wrought-iron pipes, &c.:	
Morris, Tasker & Co	187 63
Pancoast & Maule	*181 76
W. C. Allison & Co	273 12
Requisition No. 64. Pipe, brackets, &c.:	
S. J. Creswell	$389 14
Noblit, Brown, N., & Co.	322 52
J B. Shannon	*314 14
Requisition No. 65. Tool-steel:	
Morris, Wheeler & Co	†38 50
Midvale Steel-Works	*46 75

Offers for supplies for United States navy-yard at Kittery, Me., under advertisement dated November 11, 1876.

	Per gal.
Requisition No. 12. Gas-oil:	
Rider & Cotton	*$17\frac{9}{100}$
N. T. Mathes & Co	$17\frac{95}{100}$
C. Dwight Ha nsco	20½
John Stokell & Co	19½

No. 4.—BUREAU OF NAVIGATION.

BUREAU OF NAVIGATION, NAVY DEPARTMENT,
October 31, 1876.

SIR: I have the honor to submit the following report of the Bureau of Navigation for the past year, together with estimates for its support and for the expenditures that will probably be required in that division of the naval service committed to its immediate charge for the fiscal year ending June 30, 1878. Included in this report, and transmitted herewith, are the reports and estimates of the several offices under its cognizance, and an abstract of offers for supplies received.

NAVIGATION.

The bureau, with the consent of the Department, has removed the compass-stations, for the reasons stated in last year's report. Other means have been provided for making deviation-tables speedily and

* Accepted. † Informal.

correctly, whenever desired. This should be done several times during a cruise, and always when the vessel changes greatly her geographical position.

The appended report of Professor B. F. Greene, United States Navy, charged with the superintendence of compasses, gives detailed information on this important subject.

HYDROGRAPHY, CHARTS, AND BOOKS.

The Hydrographic Office increases yearly its sphere of usefulness, and supplies in general our Navy and our merchant-marine with nautical charts, sailing-directions, and hydrographic information generally. The appended report of the Hydrographer, and the suggestions made therein, will doubtless receive your careful consideration.

The work of telegraphic determinations of longitude in the West Indies has been brought to a close for the present, having, indeed, been carried as far as is practicable at this time. The results have been satisfactory. The work was ably conducted by Lieut. Commander F. M. Green, in command of the Gettysburg, whose report gives in detail all of the latitudes and longitudes determined to the nearest limit of error.

By your orders, this work will be extended this winter, by means of chronometric and other determinations between the island of Trinidad and Aspinwall, along the northern coast of South America.

The Gettysburg, now under the command of Lieut.-Commander H. H. Gorringe, is engaged in obtaining information in localities found deficient in the sailing-directions of the Mediterranean. As the work of compiling what has been published was done by this officer, he is specially qualified to supply deficiencies in information.

A vessel named by you as likely to be available for making a running survey of the coast of Guatemala has been supplied partially with instruments and deep-sea sounding apparatus for use in transit.

The bureau has to regret that in several cases, and indeed in every case where this sounding-apparatus has been furnished to vessels of war without specific instructions for sounding, not a single cast has been made. This will make it advisable hereafter to furnish this apparatus only in exceptional cases, accompanied by specific orders for sounding.

At the time of my last report, the Tuscarora, under the command of Commander J. N. Miller, was commencing a line of soundings from the Sandwich Islands to the Feejee Islands, and thence to the port of Brisbane, Australia; further projected soundings were not made, owing to the work having already been done by the English.

These soundings are of great interest to scientists, and afford definite information to those who may be interested in submarine cables between the points named.

This sounding was done by the Tuscarora without interfering with her important duties as a vessel-of-war, and afforded a practical illustration that deep-sea soundings, as now made, require no sacrifice to that work as a specialty.

Several years consecutively this bureau has asked appropriations for establishing the survey of the North Pacific Ocean on a proper basis, and has endeavored to show what should be done, and that it properly belongs to our Government to do it. A steamer properly built for the work, and two three-masted schooners, with the necessary outfits, would cost two hundred thousand dollars, and, when at work, this force would be maintained at less cost than an ordinary cruiser, and in addition to

serving usefully as vessels-of-war would, by co-operating, spare great labor in establishing positions, in making excellent running surveys, and thus rendering comparatively safe the navigation of that great ocean.

The instrumental location of a transcontinental ship-canal-line on the isthmus of Panama, as well as that known as the Atrato-Napipi route, remains unpublished from a lack of the necessary appropriations. The maps, plans, and calculations have been made for more than one year.

It is intended to keep the libraries of our ships-of-war up to the requirements of the age by adding new publications which appear to be calculated to extend the usefulness of the Navy, which goes beyond mere efficiency in our vessels for war purposes, as is shown in the collateral employment of our vessels-of-war under the command of and aided by able and efficient officers.

CONTRIBUTIONS TO THE INTERNATIONAL CENTENNIAL EXHIBITION.

This bureau has complied with all requirements from the representative of the Navy Department at the Government Exhibition in supplying articles of interest under its cognizance, comprising compasses, and the various nautical, meteorological, surveying, and plotting instruments; deep-sea and ordinary sounding implements; running, signal, and other lights; night-signals; nautical charts and sailing-directions; a flag-ship's library, and a collection of national flags from the earliest period of this Government to date, as well as distinguishing and signal flags; and it is gratifying to state that the contributions from this bureau were appreciated as a very interesting part of the display made by the Navy.

NAVAL OBSERVATORY.

The report of the Superintendent of the Naval Observatory, herewith appended, presents the subjects under his charge so fully as to require no special notice of this bureau.

NAUTICAL ALMANAC.

The report of Prof. J. H. C. Coffin, charged with the calculations, reductions, and publication of our Nautical Almanac, requires special attention. The calculations and reductions are made years in advance, and indeed the publications must be also, in order to fulfill their purposes. Without sufficient appropriations this cannot be done.

SIGNALS AND SIGNAL-OFFICE.

The appended report of the Chief Signal-Officer of the Navy will be read with interest, affording as it does evidence of increased efficiency.

The tactical and general signal-books are now completed and issued, and a blind established which will render the possession of the signal-books, with the blind included, of no value to an enemy.

New methods of night-signaling for fleets have been satisfactorily tested, and still further success seems to be assured, whilst the use of electricity for lighting vessels-of-war and for signaling seems to be probable ere long. Indeed, for signaling it is only unemployed now because it is relatively expensive.

The Chief Signal-Officer, with two assistants, is now endeavoring to establish a practicable method of phonetic signaling, sufficiently inex-

pensive, if possible, to allow its use on board of merchant-steamers and sailing-vessels for indicating at least the course steered, and, with vessels-of-war, for communicating with each other in fogs and thick weather, orally, in the same manner as is done visually by the Army signal method.

OFFICE OF DETAIL.

The naval service supplies twenty officers employed under the Treasury Department in the various duties connected with the Light-House Establishment and the inspection of light-houses. It furnishes, also, fifty officers, of different grades, engaged in the hydrographic work of the Coast Survey, who are thus gaining an experience that will be of great advantage, prospectively, to the Navy, even when it is considered strictly for war purposes, whilst the Government gains the advantage of employing this large number of officers in purely civil pursuits to render navigation safe. It must be borne in mind that their pay and maintenance is chargeable to the naval appropriations, and that their services elsewhere entail a considerable expenditure that would otherwise not be incurred by the Navy.

CONTRACTS.

With the exception of illuminating-oils, and commanders' and navigators' stationery, the supplies with the furnishing of which this bureau is charged are of such special nature as to forbid the exercise of the contract system, but necessarily demand a purchase by careful selection and at fair prices to dealers and instrument-makers.

Respectfully submitted.

DANIEL AMMEN,
Chief of Bureau.

Hon. GEO. M. ROBESON,
Secretary of the Navy.

OFFICE OF SUPERINTENDENT OF COMPASSES,
BUREAU OF NAVIGATION, NAVY DEPARTMENT,
Washington, October 20, 1876.

SIR: I have the honor to submit herewith the following synopsis of my annual report to the bureau for the current year:

THE NAVY COMPASS.

Relative to the Navy compass, reference is made to an improvement recently proposed by Mr. Ritchie, in the card-magnets, consisting in the substitution of bundles of steel wire for the piles of thin laminæ now used. Certain advantages of these magnets are specified as made apparent, and a trial of a few compasses, thus fitted, at sea, is recommended.

Mention is made of the compass-case, fitted up under your orders, in the Government building of the International Exhibition, and a list of its contents is given.

COMPASS INSPECTION.

Under this head a detailed description of the compass-testing instrument, recently constructed, is given. This instrument is intended

be used as an auxiliary to the compass observatory, near Boston, in the examination of the Navy compasses at the several navy-yards, after the compasses are turned in from cruises at sea; and the practicability of making these examinations, where they are liable to encounter large compass disturbances from magnetic surroundings, is justified by certain peculiarities in the construction and use of this instrument.

MAGNETISM OF SHIPS AND COMPASS DEVIATIONS.

Magnetic examination of the Alert and Huron.—A detailed statement of the magnetic examination of the new iron sloops of war Alert and Huron, during last winter, is presented. The results comprise the deviations of the standard and steering compasses, with the corresponding magnetic elements of both ships, from three sets of observations; of which two sets were made under steam, first with the port helm and next with the starboard helm, and one set with the smoke-funnel lowered.

In reviewing these results attention is called—

First, to the characteristic differences in both the polar and quadrantal forces, and in the corresponding compass deviations, according as the direction of the swing was to the right or to the left, and which are more decided as the changes in heading were more rapid. It is shown that these evidences of tardiness in the inductive action appear to be at the least as decided for the polar as for the quadrantal force. Allusions are made to the theoretical considerations bearing upon this question; and it is suggested that in practice there is need of certain precautions, if entirely reliable observations are to be made.

Secondly, to the remarkable changes of the standard compass of the Alert since the examination of that vessel in 1875. These changes are attributed in part to the shortening of the smoke-funnel and in part to the cutting away of the lower sections of the iron rail upon the mizzen mast, the two removed portions having probably concurred as a partial polar corrector of the compass.

Thirdly, to the influence of lowering the smoke-funnel during the third set of observations on board each ship.

Fourthly, to the existence of well-defined sextantal deviations, in addition to the usual polar and quadrantal deviations, at the steering-compass of the Alert, with allusions to theoretical considerations.

THE ADJUSTABLE BINNACLE.

A detailed description is given of the new adjustable binnacle with polar, quadrantal, and vertical correctors, affording facilities not only for the convenient magnetic correction of the compass, but for a complete definite registry of the corrections, as separately made, as well as for subsequent re-adjustments and registrations, either at sea or in port.

I am, sir, very respectfully, your obedient servant,

B. F. GREENE,

Professor of Mathematics U. S. N., Superintendent of Compasses.

Commodore DANIEL AMMEN, U. S. N.,

Chief of Bureau of Navigation,

Navy Department.

UNITED STATES HYDROGRAPHIC OFFICE,
Washington, D. C., September 16, 1876.

SIR: In compliance with the bureau order of August 4, 1876, I hav the honor to forward herewith the estimates of this office for the yea ending June 30, 1878.

During the year ending June 30, 1876, the work accomplished by thi office has been as follows: Five new plates engraved; ten in process c engraving; fifty-seven charts have been prepared and photolitho graphed; and thirty-five plates corrected, to a greater or less extent, a information requiring it has been received.

Sailing directions: "The Navigation of the Pacific Ocean;" "Th West Coast of Africa," Volume II; "The Coasts and Islands of th Mediterranean," Part I; and "The Coasts and Ports of the Bay of Bis cay," have been published and issued. Volume I of "The Direction for the West Indies and Gulf of Mexico;" Part II, "Mediterranean; Volume III "West Coast of Africa;" and "The Northern Coast c France," are in hand and progressing favorably.

The Directions for the coast of Chili, Bolivia, and Peru have for severa months been awaiting their turn at the Public Printer's; the usual fo eign "Light-house Lists," "Hydrographic Notices," and "Notices t Mariners" have been issued.

The determination of longitudes in the West Indies by the electri telegraph, by the party in charge of Lieut. Com. F. M. Green, U. S. N in the United States steamer Gettysburg, has been completed mos satisfactorily.

The positions of Key West, Havana, Santiago de Cuba, Kingstor (Jamaica,) Aspinwall, Panama, San Juan de Porto Rico, St. Thomas Santa Cruz, St. Pierre, (Martinique,) Bridgetown, (Barbados,) and Por Spain, (Trinidad,) have been occupied, the measurements being made from Key West, the position of which had been determined with great accuracy by the United States Coast Survey. The observations are now being computed for publication. For the first time the latitudes and longitudes of these islands have been determined accurately, so as to admit of no question.

On the return of the Gettysburg some intervals in the soundings made by Her Britannic Majesty's steamer Challenger between St. Thomas and Bermuda were filled in, the line of soundings being continued from Bermuda to Cape Henry; the greatest depth obtained was 3,950 fathoms, confirming those made by the Challenger.

The sounding-machine invented by Sir William Thompson, with improvements by the Bureau of Navigation, and the piano wire for sounding, have in this, as in every other instance, given satisfactory results. The instruments used in the determination of longitudes are in good order and require no expenditure; it is to be hoped that it may be found practicable at a future period to continue these valuable determinations.

During the fiscal year the agents of this office have sold five thousand and thirty-one (5,031) charts, and one thousand and nineteen (1,019) sailing directions, and other publications of the office.

As the estimates of the office have been only such as to admit with economy of its gradual progress toward meeting all the demands of the commercial and naval marine, the reduction of the appropriation for the fiscal year ending June 30, 1877, will cripple the office in its progress, debarring it from publishing much of its work as completed; this will especially be the case if unable, from want of appropriation, to print works which are now ready and others which will soon be ready for the press.

The greater number of charts from the survey of the United States steamship Narragansett, Commander Dewey, on the coasts of Lower California and in the Gulf of California, are as yet not engraved. The appropriations requested for completing the work have not been granted. The replotting of it has been carried on as rapidly as the small force at the disposal of the office would permit, and the few which have been engraved have been completed at the sacrifice of other office-work. I may here mention that the general charts of Commander Dewey's survey have already been engraved by the British Admiralty Hydrographic Office, who lose no time in placing before the public everything which is of assistance to navigation. I submit an estimate for this work, as also for the continuance of the survey into the Pacific Ocean, regarding it as of the greatest importance for the safety of navigation to have all the dangers existing there thoroughly examined and determined.

With regard to the rented building occupied by this office, I will state, as in my former reports, that it is in no respect fire-proof, and that it does not contain the requisite space. As heretofore, I recommend that a building be purchased and fitted up for a Hydrographic Office.

Very respectfully, your obedient servant,

R. H. WYMAN,
Commodore United States Navy and Hydrographer.

Commodore DANIEL AMMEN, U. S. N.,
Chief of Bureau of Navigation,
Navy Department.

UNITED STATES NAVAL OBSERVATORY,
Washington, October 20, 1876.

SIR: In compliance with the bureau's instructions of the 28th ultimo, I have the honor to submit a report of the operations of this institution for the past year:

THE GREAT TELESCOPE.

Since my last report, observations with the 26-inch refractor have been made continuously. The satellites of the outer planets, Neptune, Uranus, and Saturn, have been carefully observed, and also a number of the more interesting and difficult of the binary stars. The observations of the satellites and of the companion of Sirius have been communicated to the Astronomische Nachrichten. A paper containing an account of the search for the companion of Procyon, discovered by Mr. Otto Struve, director of the Pulkova Observatory, has been communicated to the American Academy of Arts and Sciences at Boston, and also to the Astronomische Nachrichten. The result of this search is, that none of the observers at Washington have been able to see the companion found and observed by Mr. Struve and his assistant; but they have discovered three other close companions of Procyon, and conjecture the existence of several more. The new companions of Procyon were first seen here by Professor Holden, and afterwards by Professors Newcomb, Watson, and Peters, and by Mr. David P. Todd. Some of these companions have also been seen in Cambridge, Mass., by Messrs. Clark, with the 26¼-inch objective made by them for Mr. McCormick.

The figure of the object-glass not being quite perfect, and the flint lens having become slightly stained, the makers, Messrs. A. Clark & Sons, proposed to repolish this lens. The work was undertaken by them on April 21st and was finished May 4th of the present year

The figure of the glass is now very nearly perfect, and the stains hav been removed from the flint-lens. The work was done by Messr Clark without compensation, further than their transportation to an from Washington, and their subsistence while here.

Mr. A. G. Clark, while testing this objective, found the star ε Coron Borealis, a close and difficult double star. As this may prove a interesting binary, I give here the results of the observations made b Professor Hall:

1876.4. Angle of position, = 350°.5; distance, = 2″.12; 3 nights.

The magnitudes are 4 and 12.

The dome is in good condition, and is moved with ease, considerin its size. In March, the cog-work by means of which the dome is move became loose, and it was necessary to bolt it to the frame-work; bu beyond this slight improvement the dome has needed no repairs. The canvas curtain which covers the opening in it, weakening by constant exposure, is easily torn by the wind, and needs renewing every year. Still, this manner of covering so large an opening seems to be the most convenient.

The driving-clock continuing to be troublesome, and frequently stopping, it was taken down on July 2d, and the bearing of the shaft that carries the conical pendulum was changed. This bearing was a conical steel cup, into which was fitted the conical point of the shaft. On examination the point of the shaft was found to be worn and rough, probably through heating. In place of the conical steel cup, Mr. Gardner, the instrument-maker, put a plane agate surface, and gave the lower end of the shaft a spherical surface of large radius. To guide the shaft, an oil-cup is raised around the agate, and the upper surface of this cup forms a ring the size of the shaft. The clock now runs with much less noise and jar than before, and thus far has given but little trouble. The telescope and the entire apparatus are now in good condition, and are in constant use.

The transit circle.—This instrument, under the direction of Professor J. R. Eastman, assisted by assistant observers Edgar Frisby, A. N. Skinner, and H. M. Paul, has been employed, as in the preceding year 1874–'75, in observations of the sun, moon, and planets, and of a large list of miscellaneous stars whose places were desired, first, as zero-points for the formation of a catalogue from the zone observations made here in the years 1846 to 1849; secondly, for the use of Lieut. G. M. Wheeler, Corps of Engineers, United States Army, in the reduction of the zenith-telescope work of his parties engaged in surveying and exploring the western Territories; and, thirdly, for the use of Lieut. Com. F. M. Green, in his determinations of latitude in the West Indies.

Considerable progress has been made in the observation of the list of stars from the British Association Catalogue, between 120° 0′ and 131° 10′ north polar distance.

The observations of stars from the American Ephemeris have been generally limited to those necessary for the determination of time and azimuth, and for reflection observations.

In October, 1875, clock signals were exchanged on five nights with the observatory of Lehigh University, Bethlehem, Pa., to determine the longitude of that observatory. A report of this work will appear in an appendix to the volume of 1875.

The roof of the transit-circle observing-room is still in a very bad condition, and should be rebuilt on an entirely different plan.

The 9.6-inch equatorial.—This instrument is under the charge of Professor Eastman, with Messrs. Frisby, Skinner, and Paul as assistants.

been employed in the observation of occultations, and in identi-
.steroids whose places are not well known.

il circle and transit instrument.—With the transit instrument Pro-
Yarnall has been observing such stars as had not been sufficiently
ed in the catalogue which was published for the years 1845 to
and other stars whose places have since been observed in declina-
th the mural circle. He has reduced these stars to their mean
and they are now ready for a new edition of that catalogue.
also been engaged in preparing for publication that portion of
nual volume for 1874 which is now in press. He was assisted by
sor Lockwood until the latter's retirement in August last.

neteorological department has been in charge of Professor East-
nd the usual observations with the barometer, and the dry, wet,
ar thermometers have been made at 0^h, 3^h, 6^h, 9^h, noon, 3^h, 6^h,
on each day. The observations for 1875 were ready for the
in August, and, though unavoidably delayed, 200 extra cop-
soon be ready for distribution to our meteorological correspond-

nometers.—There are at present 82 chronometers under compari-
which 58 are ready for issue and 24 are undergoing trial. There
in the hands of Messrs. Negus undergoing repairs. This firm
ntinued to do the cleaning and repairing of instruments for the
atory, and has sent here 25 chronometers during the year in good
Fifty-three chronometers and seven watches have been received
l sources, and 34 chronometers and 6 watches have been issued

t. Commander C. H. Davis was ordered to duty October 23, 1875;
T. N. Lee, 15th November; Lieut. J. J. Brice, 1st December;
Commander G. W. Pigman, March 1, 1876; Lieut. C. H. Arnold
tached November 12, 1875; Lieut. J. J. Brice, March 7, 1876;
T. N. Lee, May 31. The last was re-ordered September 19, 1876.
on duty at present are Lieut. Commanders C. H. Davis and G. W.
n; Lieut. Edward W. Sturdy (ordered on the 14th instant) and
T. N. Lee.

stigation of the moon's motion.—Three computers are now employed
work under direction of Professor Newcomb, with the appro-
n of $3,000 for the purpose. It is hoped that the discussion of all
ed observations of eclipses and occultations from the earliest his-
times till 1750 will be nearly completed during the present fiscal
nd will be ready for publication by the end of 1877. The theo-
investigation of the inequalities due to the action of the planets
quire a longer time for their completion. An appropriation of
is therefore asked for, which will suffice for the employment of a
computer through the next fiscal year.

ction of transit of Venus observations.—This work is going for-
s fast as the limited balance of past appropriations in the hands
commission will admit. The time observations, and errors and
f chronometers at all the stations are nearly computed, and the
es are all determined. Prof. T. H. Safford has been tempora-
ployed in the tedious investigations necessary to determine the
des of the stations, and in preparing the tables necessary for re-
the photographic negatives. Next to the determination of lon-
, the most laborious part of the work which remains to be done is
asurement of the photographic negatives. The commission as-
this work to Professor Harkness, in June, 1875. By him the
xures of the eight transit instruments used by the observing

parties have been carefully determined by means of horizontal and ve tical collimators, erected in the fire-proof for that purpose. The inequa ities of the pivots of these transits have also been determined, the i strument employed in the work being Professor Harkness's new sphe ometer-caliper.

Owing to bad weather, more than half the photographs of the trans of Venus are so faint that it is not possible to see them through an o dinary microscope. A series of experiments undertaken to overcom this difficulty, resulted in the construction of a new form of micromet microscope, which renders it possible to measure all these pictures wit a good degree of accuracy. Besides this new optical arrangemen other additions have been made to the measuring engine, wh ch greatl facilitate its use, and considerable progress has also been made in i vestigating the errors of its glass scales.

The observations made at the Hobart Town station for the telegraphi determination of the difference of longitude between that place an Melbourne, have been reduced, but the final value of the longitude ca not be given because the simultaneous observations made at the Me bourne Observatory have not yet been received.

The observations for telegraphic difference of longitude between th Hobart Town and Campbell Town stations have been completely r duced, and result in placing Campbell Town thirty-nine seconds an fifty-six hundredths of time ($39^s.56$) east of Hobart Town.

Blank forms have been prepared for the reduction of the chronomet rical differences of longitude, and much progress has been made in the computation of the longitude of the Kerguelen station, but the final result has not yet been obtained.

International Exhibition, 1876.—In response to inquiries made by the Bureau of Navigation in regard to the amount of space desired by the Observatory for its exhibit at the International Exhibition, request was made of the "Board on behalf of the Executive Departments" for placing the following classes of objects, the plan and estimates for the exhibition of which were approved by the Secretary of the Navy:

1. A copy of each volume of the astronomical and meteorological observations issued by the Observatory from the date of its founding, 1845.

2. The distinct treatises which have issued pertaining to the subjects constituting part of its investigations.

3. A selected number of chronometers of American manufacture, taken from those on hand for issue to United States vessels.

4. A set of the instruments actually employed in observing the transit of Venus, December 8–9, 1874, the instruments being mounted in a set of buildings similar to those which were constructed for the actual observations and transported to the several stations in each hemisphere. This part of the exhibit was designed to show the modes in which the observations were made and recorded, and to illustrate American aptitude for expeditionary astronomical work.

5. The illustration of American Arctic exploration from the year of the first Grinnell expedition, (De Haven and Kane,) 1850, to the year of the death of Captain Hall, 1871. With this subject, the Observatory had been again brought into official relation.

The full amount of space required in the Government building and within the grounds of the Centennial having been readily accorded by the representative of the Navy Department, Rear-Admiral Jenkins, the exhibit of the objects heretofore named has been satisfactorily made. The care of placing the astronomical portion was intrusted to Prof.

William Harkness, one of the observers of the transit of Venus, 1874, assisted by Mr. W. F. Gardner, instrument-maker of the Observatory; that of the publications and of the Arctic collection was intrusted to Prof. J. E. Nourse.

While making up this collection, contributions from distinguished friends of the American explorers, and particularly from those who took part in the different expeditions, including officers of the Navy, were cordially offered and their receipt acknowledged; efforts being made to link to the Centennial all who had been directly interested in our explorations.

The catalogue of "Navy Department exhibits," recently published at the International Exhibition, contains accurate descriptive lists of the objects furnished by the Observatory.

The Library.—The increase in the number of volumes (principally by exchanges) has somewhat exceeded that of former years. The distribution of the annual volumes, besides supplying the calls for results of the investigations of the Observatory by its collaborators in the various observatories and other scientific institutions of the world, brings back rich gratuitous exchanges to build up our own resources.

The volume of observations made during the year 1873, has been widely distributed. An appendix to the volume for the year 1874, containing a condensed account of the Observatory, a list of publications, and a brief description of each of the instruments, illustrated by heliographs, has been received from the press in advance of the volume, and is now being distributed to those who are directly interested in astronomical work.

Very respectfully, your obedient servant,

C. H. DAVIS,
Rear-Admiral, Superintendent.

Commodore DANIEL AMMEN, U. S. N.,
Chief of Bureau of Navigation, &c., Navy Department.

No. 16.

NAUTICAL ALMANAC OFFICE,
Washington, D. C., October 19, 1876.

SIR: I have the honor to submit the following report of the operations of this office during the past year.

The preparation of the American Ephemeris and Nautical Almanac has continued as in previous years. The Ephemeris for each year comprises all relating to the places of the sun, moon, principal planets, and standard stars that is desired by astronomers in such a work.

During the past year 418 copies have been sold, and 627 have been distributed to the ships and stations of the Navy; to the surveying and exploring parties of the Army; the Coast Survey and the Land Office; to observatories and astronomers, and to various colleges and other public institutions, especially to those in which astronomical observations or investigations are conducted.

A smaller volume, containing the first half of the complete Ephemeris, is published for the use of navigators. More than 3,500 copies of the almanac for each year are required for the supply of merchant-ships.

There have been printed during the year 1,000 copies of the Ephemeris for 1877; 500 of the Ephemeris for 1879; 3,000 of the small almanac for 1877; 1,000 of the small almanac for 1879.

The small almanac for 1879 was received from the printer in January, and the complete volume for 1879 in August of the present year. The latter was delayed by the exhaustion of the appropriation for printing.

The small almanac for 1880 is nearly complete and stereotyped, and it is expected that the entire Ephemeris for that year will be issued before April next.

The preparation of the Ephemeris for 1881 is in progress, but cannot be completed with the appropriation for the present year.

The preparation of the Ephemeris for 1882 will be still more delayed unless the whole appropriation requested for the next fiscal year be granted.

Considerable progress has been made in extending the star tables of the American Ephemeris from 1800 to 1900. But it has become necessary to suspend this work until a new appropriation becomes available. The want of it will delay still more the preparation of the Ephemeris for 1881.

Of the 167 small planets, 49 have been discovered by American astronomers. It is desirable that ephemerides of all of these should be prepared by citizens of the United States. The appropriation of $3,000 year for this purpose enables me to provide for 25 only. The compensation allowed for each is inadequate for the labor required.

I have already submitted estimates for the expenses of this office in the next fiscal year.

I am, very respectfully, your obedient servant,

J. H. C. COFFIN,
Prof. of Mathematics, U. S. N., Sup't.

Commodore DANIEL AMMEN, U. S. N.,
Chief of Bureau of Navigation, Navy Department.

UNITED STATES NAVAL SIGNAL-OFFICE,
Annapolis, Md., September 26, 1876.

SIR: I have the honor to report to the bureau that the operations at this office during the past year have been confined to an elaborate series of experiments with the electric light of Professor Farmer, and with signal bombs, rockets and candles of various kinds, (as made known to the bureau in my special reports from time to time,) and to the completion of the new general-signal book which was issued to the service on the 1st instant.

The Coston signal now in use in the Navy so lights up a ship as to disclose her size, armament, &c., to every vessel in her vicinity, and blinds the men on deck—serious objections in time of war, and when going through a great thoroughfare like the British Channel, or in and out of a crowded port; and I would, therefore, recommend that the signal-candle (which burns in the air and can be seen by all the vessels of a fleet at the same instant) be substituted for it, until the electric light takes the place, (as it ere long must, I think) of all other night-signals.

Working by the flash system, signals made by Farmer's electric light were read in my presence at the distance of six miles with great rapidity and exactness, at the torpedo depot, this summer, for three consecutive nights, without a single mistake being made; and on the last night of my stay there Professor Farmer so placed the lantern that its rays were thrown vertically in the air; then, working it by hand, he made the

"one," "two," "three," of the Myers code, thus demonstrating the practicability of using the air as a "screen" for signaling. The night on which this experiment was made was beautifully clear, and there seemed to be the slightest possible moisture in the atmosphere.

Professor Farmer expresses the opinion that electricity may be used on board our ships, not only for signalizing, but for lighting them safely and economically; and, in view of the great importance of the matter, I trust I may be permitted to express the hope that Congress, at its next session, will make a special and liberal appropriation for electric purposes.

The quarterly reports of the various vessels in commission show an improvement in the signal corps of the Navy.

As the office is to be removed to the Navy Department, the sum of $840 will be sufficient for its maintenance, distributed as follows;

Laborer's wages	$540 00
Contingent expenses	300 00
	840 00

I am, sir, respectfully, your obedient servant,

FOXHALL A. PARKER,
Commodore, and Chief Signal-Officer.

Commodore DANIEL AMMEN, U. S. N.,
Chief of Bureau of Navigation, &c., Washington, D. C.

BUREAU OF NAVIGATION.

Estimate of appropriations required for the service of the fiscal year ending June 30, 1878, by the Bureau of Navigation.

FOR THE SUPPORT OF THE BUREAU OF NAVIGATION.

For salary of chief clerk, (Revised Statutes, page 69, section 416, and act of August 15, 1876	$1,800 00
For salary of one clerk of third class, (Revised Statutes, page 26, section 167, and act of August 15, 1876)	1,600 00
For salary of one clerk of second class, (act of August 15, 1876)	1,400 00
For salary of messenger, (act of August 15, 1876)	840 00
For salary of laborer, (act of August 15, 1876)	720 00
For contingent expenses	800 00
Total	7,160 00

Estimate of appropriations required for the service of the fiscal year ending June 30, 1878, by the Bureau of Navigation.

A.

1.—FOR NAVIGATION.

For foreign and local pilotage and towage of ships-of-war	$55,000 00
For payment of canal dues and other charges incidental to passing through canals, (inapplicable to any other purpose)	7,000 00
For services and materials in correcting compasses on board ship, and for adjusting and testing compasses on shore	3,000 00
For nautical and astronomical instruments, nautical books, maps, charts, and sailing-directions, and repairs of nautical instruments for ships-of-war	11,000 00
For books for libraries for ships-of-war	3,000 00

For navy signals and apparatus, namely: signal-lights, lanterns, rockets, including running lights, drawings, and engravings for signal-books...	$6,000 0
For compass-fittings, including binnacles, tripods, and other appendages of ships' compasses	7,000 0
For logs, and other appliances for measuring the ship's way, leads, and other appliances for sounding	3,000 0
For lanterns and lamps, and their appendages, for general use on board ship, including those for the cabin, ward-room and steerage, for the hold and spirit-room, for decks and quartermaster's use	5,000 0
For bunting and other materials for flags, and making and repairing flags of all kinds	5,000
For oil for ships-of-war, other than that used in the engineer department, for candles, when used as a substitute for oil in binnacles, running-lights, for chimneys and wick, and for soap used in the navigation department.	24,000
For stationery for commanders and navigators of vessels-of-war, and for use of courts-martial	2,000
For musical instruments and music for vessels-of-war	1,000
For steering signals and indicators, and for speaking-tubes and gongs for signal-communication on board vessels-of-war	3,000
For payment of bill of Messrs. Anthony & Chew, for general average on stores shipped per steamship General Sedgwick, in January, 1871	136 4
Total	135,136 4

2.—FOR NAVIGATION—CONTINGENT.

For freight and transportation, postage and telegraphing on public business, advertising for proposals, packing-boxes and materials, and all other contingent expenses	$5,000

3.—FOR NAVIGATION—HYDROGRAPHIC WORK.

For drawing, engraving, purchase of chart-paper, printing and photolithographing charts, correcting old plates, preparing and publishing sailing-directions and other hydrographic information	$60,000
For fuel, lights, and office-furniture, care of building and other labor, purchase of books for library, drawing materials, and other stationery, postage, freight, and other contingent expenses	5,000
For rent and repair of building	2,800
For completing and engraving charts of the survey made of the coast and gulf of lower California and the mouth of the Colorado River	7,000
For continuing the survey of the Pacific Ocean and of the reported dangers to navigation	15,000 0
Total	89,800 0

B.

1.—FOR NAVAL OBSERVATORY.

For three assistant observers, at $1,500 each	$4,500 0
For one clerk	1,800 0
For one instrument-maker, three watchmen, one messenger, and one porter, keeping grounds in order, repairs of buildings and inclosures, fuel, light, and office-furniture, professional books for library, chemicals for batteries, stationery, freight, and all contingent expenses	13,500 00

NOTE.—The sum of $13,500 was, for many years, the amount annually appropriated. The reduced sum has proved inadequate for the maintenance of the establishment and the preservation of the buildings.

For theory and tables of the moon's motion	1,200 00
For reducing and transcribing astronomical and meteorological observations for publication	2,200 00
Total	23,200 00

2.—FOR NAVAL OBSERVATORY.—TRANSIT OF VENUS OBSERVATIONS.

For completing reductions of observations of the transit of Venus	$5,000 00

3.—FOR NAVAL OBSERVATORY.—TRANSIT OF MERCURY OBSERVATIONS.

For expenses of observing the transit of Mercury on May 6, 1878, at various points in the United States	$1,500 00
Total under Naval Observatory	29,700 00

C.

1.—NAUTICAL ALMANAC.

For pay of computers and clerk for preparing for publication the American Ephemeris and Nautical Almanac	$20,000 00
For rent, fuel, labor, stationery, boxes, expresses, books, and miscellaneous expenses	1,500 00
For continuance of work on new planets discovered by American astronomers	3,000 00
Total	24,500 00

NOTE.—The estimate for pay of computers, &c., is for the amount usually appropriated in previous years and found to be necessary for the successful prosecution of the work.

RECAPITULATION.

Estimate of appropriations required for the fiscal year ending June 30, 1878, by the Bureau of Navigation, Navy Department.

FOR SUPPORT OF BUREAU.

Salaries and contingent	$7,160 00

FOR THE NAVAL SERVICE.

A 1. Navigation	$135,136 44
2. Navigation, contingent	5,000 00
3. Navigation, hydrographic work	89,800 00
B 1. Naval Observatory	23,200 00
2. Naval Observatory, transit of Venus observations	5,000 00
3. Naval Observatory, transit of Mercury observations	1,500 00
C 1. Nautical Almanac	24,500 00
Total	284,136 44

Offers to furnish ten thousand gallons lard-oil at the New York navy yard, under advertisement authorized by the Bureau of Navigation, July 18, 1876.

	Per gallon
Chard, Howe & Weber*	$092¼
Manhattan Oil Company	097
S. C. Carll	097½
J. H. Walker	1004 2/10

No. 5.—BUREAU OF EQUIPMENT AND RECRUITING.

NAVY DEPARTMENT,
BUREAU OF EQUIPMENT AND RECRUITING,
October 23, 1876.

SIR: I have the honor to submit the annual report of this bureau, with the estimates for its support for the fiscal year ending June 30, 1878.

During the past fiscal year 99 vessels have been either partially or wholly equipped under this bureau at the several navy-yards, at an ex-

* Accepted.

penditure for labor of $320,000, the greater part of the materials having been supplied from the stock on hand, which, however, is rapidly diminishing.

Sixty-one thousand three hundred and eleven tons of coal have been purchased at home and abroad for the use of the Navy, under this bureau, costing, including freight and shipments, $623,237.76.

Three hundred tons of hemp have been purchased, costing $91,459.95.

The rope-walk at Charlestown navy-yard has supplied the wants of the service with wire, hemp, manila and hide rope.

The equipment-shops at the Washington navy-yard have furnished all the anchors, chains, &c., needed for the service.

IMPROVED GALLEY.

Since my last report an improved galley has been introduced into the Navy, at a slightly less cost than the old one, and with a material economy in fuel and increased facilities for cooking; dispensing in smaller ships with the former cumbersome and expensive bake-oven.

If the same improvements (which are patented) can be introduced in the galleys manufactured at the Washington navy-yard, it will be advisable to manufacture them there in preference to buying of private parties.

I earnestly recommend that in future all galleys on single-decked ships be placed under the top-gallant forecastle.

CHAIN-IRON.

During the past few years quite a number of ships have parted their chains without undue strain. A series of experiments instituted by my predecessor, and conducted by Commander Beardslee, disclosed the fact that much of the iron used in the manufacture of chains for the Navy was defective in the necessary qualities.

In consequence of these experiments, the testing-machine at the Washington navy-yard has been placed in thorough order, and its accuracy established; the proof-table has also been revised.

All iron for the above purpose is now examined by a board of officers before purchase, and I have reason to believe that we are at present manufacturing chains and anchors of the very best quality.

STEEL-WIRE HAWSERS.

During the past year the subject of wire hawsers has engaged the attention of the bureau.

Wire hawsers are coming into use in foreign navies, particularly for towing purposes. They have advantages over hemp and manila, which it is not necessary to mention here.

The bureau has hitherto found it impossible to obtain steel wire in this country of the requisite strength. A quantity was imported from England, and a steel-wire hawser of 7¼ inches in circumference was manufactured at the rope-walk in the Boston navy-yard, and is now on exhibition at the Centennial.

The commandant at the Boston yard has orders to manufacture two more hawsers, one of foreign steel and one of domestic, if it can be obtained. These hawsers are intended for towing the monitors.

In this connection, a board of officers is now in session at the Washington navy-yard for the purpose of reporting upon iron and steel wire

for standing rigging and hawsers, their comparative qualities and cost, the best method of preserving them from deterioration, and to ascertain the best manufacturers, &c.

I anticipate the time when wire will not only be used for hawsers, but for the more important purpose of anchoring ships. Wire cables have so many advantages that I think they must eventually be adopted.

ALLOWANCE-BOOK.

The book of allowances for this bureau was compiled at a time when men-of-war were forced to be self-sustaining, for very often the whole term of their cruises; but now, when naval stores can be found in nearly every port, and when steam and the telegraph render communication with sources of supply so easy and so frequent, it is no longer necessary to burden the holds and other store-rooms of our ships with articles often never used. Not only economy but the health and comfort of the crew will be increased by a strict revision and curtailment of the allowances, and this is now being done.

RECEIVING-SHIPS IN RESERVE FOR SEA-SERVICE.

In pursuance of the policy of the Department to have the ships employed on the recruiting-stations in condition for sea-service as near as possible, the steam-frigates Colorado and Wabash are now in commission as receiving-ships at New York and Boston; the Franklin, on her way home from Europe, has been ordered to Norfolk, and the Wyoming is fitting out at Washington.

These ships constitute a reserve class, and, although not of modern type, might be employed with great advantage in any emergency arising near our coasts, as they carry formidable batteries and have steam-power.

In addition, it is considered better in every respect that men entering the Navy should be at once placed near or on board of well-disciplined ships of war in preference to mere hulks, where but little opportunity is given for drill, and where the men waiting in idleness become careless and discontented.

I believe that this change has been in every respect economical and beneficial.

BARRACKS FOR SEAMEN.

By authority of the Department, and in pursuance of a recommendation in my last report, the hulk Vermont is now being roofed over and fitted up as a complement to the receiving-ship at New York, with mess-hall and dormitories, capable of accommodating comfortably, and with due regard to health, from 800 to 1,000 recruits.

The Vermont thus becomes a seamen's home, and the space of ground surrounding her an exclusive drill-ground, useful both for professional and healthful exercise.

I am convinced, from inspection of naval stations abroad, that while ships are necessary at recruiting stations, the system of seamen's barracks on shore for the accommodation of recruits is much better, for economic and sanitary reasons.

It is intended to make New York the central rendezvous for the Navy, as men are more readily transferred to home and foreign stations from that point, and the facilities for collecting and maintaining them on the cob-dock are greater than at any other station.

SAILORS' HALL, NEW YORK.

The sailors' hall mentioned in my last report as in course of erection by the Bureau of Yards and Docks has been finished, and fulfills all the purposes intended; it already contains a library of 1,200 volumes, and an organ for Sunday services—voluntary gifts from the citizens of Brooklyn and others, the organ costing over six hundred dollars.

The interest thus manifested by citizens exhibits the fact that an effort on the part of the Government for the amelioration of a neglected class of the community is instantly and substantially appreciated.

CONDUCT-REPORTS.

The conduct-reports forwarded to this bureau quarterly, by direction of the Department, from all ships in commission, have enabled it not only to become cognizant of the character and qualifications of every enlisted man in the Navy, but to check, in a great degree, hasty and often needless punishment of the men; holding officers by frequent inspection to a more direct responsibility.

It has been found that, as a rule, the less the punishment on board, the more efficient the ship, and it will be a happy day in the Navy when this fact is more generally recognized by officers.

FIREMEN AND COAL-HEAVERS.

The restoration of rates to firemen and coal-heavers has had a beneficial effect, by consolidating the department of steam-engineering, and simply remanding men back to their proper positions on board of a ship of war.

It is only a recognition of the fact that such a ship is, or ought to be, a full-powered steamer, intended for war purposes, using sails as auxiliary, and that the men who man the engines and take care of them in time of battle are a class by themselves, and as such must be fostered in order to be rendered efficient.

HONORABLE DISCHARGES AND CONTINUOUS-SERVICE CERTIFICATES.

The honorable-discharge and continuous-service system, in operation for several years in the Navy, has a constantly improving tendency; gradually bringing into the service a better class of men, and rendering them desirous of remaining in it.

In connection with the training-system for boys, I look forward to the time as not distant when the Navy will possess a corps of trained seamen as permanent and proficient in their several grades as our present admirable corps of officers.

In this connection I have the honor to recommend that, after January 1, 1877, all promotions of enlisted men to higher rates shall be by examination and recommendation of a board of officers, convened by the commanding officer of the ship to which they belong, and subject to his approval.

The idea is to render these promotions more permanent, and consequently more desirable.

I have also the honor to recommend that, after the before-mentioned date, continuous-service certificates shall depend upon the good conduct of the men, and only be issued upon the recommendation of their commanding officers.

Under the present system, any man serving his term of enlistment is entitled to a continuous-service certificate, and thus the Navy is often burdened with those who have no other qualification than length of service.

The complements of our ships have been reduced to correspond in some degree with the total force as reduced by act of Congress, and it becomes highly important that we should retain only the very best men in the Navy.

PERMANENT APPOINTMENTS FOR PETTY OFFICERS.

Under the present regulations, any enlisted man having served three continuous enlistments, and received three "good conduct badges," is entitled to the rate of petty officer, if qualified, and cannot on subsequent re-enlistment be disrated except by court-martial.

I would recommend that hereafter any enlisted man fulfilling these conditions shall receive from the honorable the Secretary of the Navy an appointment as a petty officer, to be held during life or good behavior, and shall be subject to detail for duty by the Bureau of Equipment and Recruiting.

The number of honorable-discharge and continuous-service men is constantly increasing, and officers should be cautioned to recommend none but the deserving for these privileges.

ACCOMMODATION OF ENLISTED MEN ON BOARD OF SEA-GOING VESSELS.

As I consider it the duty of this bureau to foster and protect the interests of the enlisted men of the Navy, I deem it incumbent upon me to call your attention to the constantly-increasing tendency of the officers' accommodations on board of a ship in our service to encroach upon the space allotted to the crew.

It would be a startling exhibit if the number of cubic feet of space allowed to the sailor, as compared to the space allowed to the officer, was placed in a tabulated form and submitted to inspection and criticism.

In addition to this general crowding of the crew forward by the increased size and number of state rooms for officers, the cabins of our ships have grown into disproportionate size, not unfrequently interfering with efficiency, and always entailing a large expense in furniture and outfit.

The dimensions of these apartments should be reduced according to regulation to actual need, and not left to the discretion of the constructors, who often build or alter them to suit the natural, but selfish, desires of officers who expect to occupy them.

It is a rare thing to see anything in the outfit of a man-of-war intended to enhance the comfort or even protect the health of the enlisted men.

In this connection, the subject of ventilation of ships has never received proper attention in the Navy; but it is foreign to my especial duty, and I only allude to it as worthy of your attention.

COURTS-MARTIAL.

I do earnestly ask your consideration of the laws which govern our courts-martial in the punishment of enlisted men of the Navy.

The Department is constantly occupied in mitigating or modifying sentences, which, although honestly rendered, and in accordance with law, are almost uniformly found to be not only too severe on the man but injurious to the service.

There is a constant tendency to inflict "loss of pay" as one of the punishments for trivial offenses. This, in my opinion, should be limited absolutely by the period in which the offenders' services are lost to the country.

An intelligent revision of the naval code would not only harmonize it with the spirit of the age but relieve the Department in a great measure of one of its most pressing duties. The letter of the law is too severe for practice, and the spirit inconsistent with modern ideas of right and justice.

DESERTION.

In my report of last year I stated that the "fear of punishment does not deter men from deserting." I am enabled to verify this statement by the records of the bureau.

During the first six months of 1875 there were 712 desertions from the entire fleet, and during the corresponding period of 1876 there were 562; the number of desertions being more than one-twelfth in 1875, and less than one fifteenth in 1876, of the whole force afloat.

I attribute this marked reduction to a growing belief among the seamen of the Navy that a more liberal system of discipline is about to prevail in the service—a discipline which will enforce the law by encouraging men with rewards for doing their duty, rather than by punishing them for its neglect.

TRAINING-SHIPS.

In my last report there were 260 boys enlisted for the Navy, to serve until 21 years of age. At the present date there are 479.

Of this number 221 are on board of the training ships, viz: Minnesota, 139; Monongahela, 82; 258 have passed out of the training-ships into the general service, and are distributed as follows: Hartford, 55; Essex, 77; Adams, 78; Marion, 18; Pensacola, 30.

The Minnesota, at New York, and Monongahela, at Baltimore, are in successful operation, for the preliminary training of boys, while the Sabine, at Portsmouth, N. H., and the Portsmouth, at San Francisco, Cal., which were also engaged on this duty, have been withdrawn, mainly in consequence of the fact that boys did not present themselves at these points in sufficient numbers to justify maintaining them.

The sailing-ship Supply has been employed the past season as tender to the Minnesota, and has made a useful cruise in our own waters, with 125 boys on board.

The Juniata, now replaced by the Monongahela, also made a cruise with her boys to Bermuda, and subsequently spent the summer in Long Island Sound.

In the absence of any positive legislation, the plan adopted is to place these boys for one year under tuition on board of stationary ships, and then transfer them to sea going vessels under the command of officers who will continue their instruction, and give personal supervision to their welfare and advancement.

So far this simple plan has worked satisfactorily, and the boys now in service are already pronounced more valuable to the Navy than the landsmen whose places they occupy.

The Department has directed that the Constitution, at Philadelphia, shall, when ready, go into commission at that port as a stationary training-ship, and the bureau hopes, when opportunity favors, to place the Saratoga at Baltimore for the same purpose.

With these ships thus employed, and with the legislation asked for, and again urged, it is believed that in a very few years a radical and *beneficial* change will be made in the *personnel* of the Navy.

TRAINING BOYS FOR ENGINEERS' FORCE.

I consider it practicable and desirable to enlist boys for the engineers' force, under the same system, to become firemen, oilers, and finally machinists if qualified; and I respectfully recommend that it may be tried on board of such of the stationary training-ships as are steamers.

REDUCTION OF NAVAL FORCE AND ENLISTMENT OF BOYS.

Congress in its last session reduced the force of the fleet from 8,500 to 7,500 men; this reduction places our Navy in its *personnel* below the standard of every navy in Europe, except, perhaps, that of Portugal; its effect, also, upon the service has been injurious by destroying the faith of the enlisted men in the implied promise of the Government to retain them, subject only to their own good conduct, and by forcing them, in the absence of any commerce of our own, to go abroad in search of employment. Many of them, after years of service in which they have become proficient in their duties, are thus lost to the country.

As this reduction, however, has been accomplished, I would recommend that Congress be asked, in lieu of any increase of men in the Navy, for the requisite authority to enlist annually 750 boys in addition to the present force.

The cost of these boys to the pay of the Navy would not amount to more in the aggregate than the cost of 250 men. I ask, therefore, for this moderate addition to the *personnel* of the Navy, in order that the training system now in successful operation, as before stated, may be perfected and made a permanent means of manning the fleet.

INTEREST ON PAY OF ENLISTED MEN, AND OUTFIT OF CLOTHING.

I would also renew my recommendation of last year, that the provisions of the act of Congress approved May 15, 1872, allowing interest at the rate of 4 per cent. per annum on the savings of soldiers deposited with paymasters, be extended to apply to the amounts due enlisted men in the Navy.

The last annual report of the Secretary of War commends this system of banking in the highest terms, and states that it has been the means in a marked degree of lessening desertion, and thereby increasing the tone and *morale* of the Army. The system is also in operation in the British navy with like gratifying results.

The bureau has for several years endeavored to get a law passed granting to the enlisted men of the Navy an outfit of clothing. Such an allowance would be eminently just, and I therefore again recommend that Congress be asked for the necessary authority.

With the foregoing moderate amount of legislation, and under the constant care and supervision of the Department, I am convinced that the *personnel* of the Navy will be speedily improved, to the great benefit of the country.

Very respectfully, your obedient servant,

R. W. SHUFELDT,
Chief of Bureau.

Hon. GEO. M. ROBESON,
Secretary of the Navy, Washington, D. C.

Estimates of appropriations required for the service of the fiscal year.

Detailed object of expenditure, and explanations.	Estimated amount which will be required for each detailed object of expenditure.	Amount appropriated for the current fiscal year.
SALARIES, BUREAU OF EQUIPMENT AND RECRUITING.		
Chief clerk, per Rev. Stat., page 69, section 416; per act of March 3, 1875, (18 Stats. at L., page 362, section 1;) and per act of August 15, 1876	$1,800	
One clerk of class four, per Rev. Stat., page 26, section 167; per act of March 3, 1875, (18 Stats. at L., page 362, section 1;) and per act of August 15, 1876	1,800	
One clerk of class three, per act of August 15, 1876	1,600	
Two clerks of class two, per Rev. Stat., page 26, section 167; per act of March 3, 1875, (18 Stats. at L., page 362, section 1;) and per act of August 15, 1876	2,800	
Two clerks of class one, per act of August 15, 1876	2,400	
One messenger, per act of August 15, 1876	840	
One laborer, per act of August 15, 1876	720	
	11,960	$1
CONTINGENT EXPENSES, BUREAU OF EQUIPMENT AND RECRUITING.		
Stationery, books, and miscellaneous items, (appropriated—18 Stats. at L., page 362, section 1;) and per act of August 15, 1876	750	
PAY OF THE NAVY.		
Pay of commissioned and warrant officers at sea, on shore, on special service, and those on the retired list, and unemployed; for mileage of officers traveling under orders; and for the pay of petty officers, seamen, ordinary seamen, landsmen, and boys, including men for the engineers' force and for the Coast-Survey service, at the pay prescribed by law, as per Rev. Stats., page 249, page 1417; Rev. Stats., page 264, sections 1556, 1595; and by act of June 30, 1876	7,300,000	5,75
EQUIPMENT OF VESSELS.		
Coal for steamers' and ships' use, including transportation, storage, and labor; hemp, wire, hides, and other materials for the manufacture of rope; cordage, canvas, leather, and wood; iron for the manufacture of cables, anchors, chains, and galleys; furniture, hose, bake-ovens, cooking and heating stoves, galleys, life-rafts for monitors, tools, condensing and boat-detaching apparatus, heating-apparatus for receiving-ships; and for the payment of labor in equipping vessels and manufacture of articles in the several navy-yards, (appropriated,) as per Rev. Stats., page 738, section 3709, and Rev. Stats., page —, section 3747	1,250,000	97
CONTINGENT, BUREAU OF EQUIPMENT AND RECRUITING.		
Expenses of recruiting and fitting up receiving-ships; freight and transportation of stores, transportation of enlisted men, printing, advertising, telegraphing, books and models, stationery, express charges; internal alterations, fixtures, and appliances in the equipment buildings at navy-yards; foreign postage, ferry and car tickets, apprehension of deserters, assistance to vessels in distress, continuous-service certificates and good-conduct badges for enlisted men, and school-books for training-ships, (appropriated,) as per Rev. Stats., page 726, section 3666	95,000	7

No. 6.—BUREAU OF ORDNANCE.

BUREAU OF ORDNANCE, NAVY DEPARTMENT,
Washington City, October 2, 187

SIR: I have the honor to submit the annual report of this bur with accompanying estimates, for the fiscal year ending June 30, 18

These estimates are prepared after a careful consideration: First the current wants of ordnance, based upon experience, $289,658; a *secondly*, upon repairs necessary to preserve the public property o

diminish the expense of current work, $50,154; torpedo-service, $122,763. To which is added an estimate for rifled cannon, including carriages, powder, and projectiles, $767,000.

RIFLE CANNON.

The evident necessity of arming our ships with more efficient guns than the obsolete smooth-bore demanded my attention from my first appointment as Chief of Ordnance. After study of the various systems in use and proposed, I am fully convinced that a breech-loader is best adapted to the conditions of naval warfare, and should be adopted for all new constructions. In this, without regard to real or supposed advantages claimed for breech-loaders, I am mainly governed by the consideration that great length of bore is necessary for an efficient rifle, but as the beam of ships is limited, and the heaviest guns may be carried by quite small vessels when mounted on carriages on the non-recoil system, breech-loading is essential.

Since foreign nations have taken the lead in this subject, and have expended immense sums in experiments, I think it unwise not to take advantage of their experience, and advise that no expense should be incurred in experimenting with new plans unless they offer marked advantages. Both of the successful systems, known as the wedge-breech, or Krupp, and the screw-breech, or French, are of American origin, but owe their development to the efforts of those who have given them common names.

I am of the opinion that the screw-breech is preferable, and have adopted it for the new breech-loading howitzers. Designs are also prepared for every caliber from 3-inch to 12-inch, on this plan, which only await appropriations to begin their manufacture.

I have also converted a Parrott muzzle-loading rifle into a breech-loader, to test the applicability of the system to guns already in the service. This gun, converted by the insertion of a wrought-iron tube from the rear, has, been successfully fired 200 times with service-charges of 10 pounds of powder and 100-pound shells. It will be fired to extreme proof with 15 pounds of powder and shells of same weight.

Eleven XI inch smooth-bore guns of 16,000 pounds have been converted into 8-inch muzzle-loading rifles of 18,000 pounds, for the armament of the United States steamer Trenton, by the insertion of a tube from the muzzle, manufactured at the West Point foundry of Paulding, Kemble & Co.

This construction, correct in theory, has proved eminently successful in practice. A gun of similar proportions lined with an imported tube has been fired by the Army Ordnance over 700 times, with charges and projectiles equal to those used in the English gun of corresponding caliber, (9 ton, 8-inch,) built up of wrought-iron and steel, and the gun yet remains in good condition.

A second gun, with the caliber enlarged to 9 inch, has been fired over 500 rounds, with charges varying from 35 to 45 pounds of powder, and projectiles of 200 to 250 pounds, thus demonstrating the entire safety of the system, although the weight is not sufficient to justify this increase of caliber, weight of charge, and projectile on shipboard.

I did not consider it necessary to duplicate these experiments, at some of which I assisted, and the results of which have been freely communicated to me by General S. V. Benét, Chief of Ordnance, United States Army, but fired the usual proof rounds, satisfied that our own gun-makers produce tubes equal to any imported.

This confidence has been fully justified by the further firing of 5 rounds, from a similar tube made at West Point foundry, at San Hook by the Army Ordnance.

GUN-CARRIAGES.

The main battery of the United States steamer Trenton being plac on the gun deck, the regulation-carriage for XI-inch was not suitab for the converted guns. The chief of bureau, with the aid of Command M. Sicard, then in charge of the ordnance department at Washin ton, N. Y., devised a carriage with hydraulic recoil check, worked en tirely by gearing, and presenting several points differing from any othe in use. It works well on a platform, but is yet to be tried experiment ally at sea. Wishing to test other plans, I desired the distinguished inventor, Captain Ericsson, to furnish a part of the carriages from his design. They are now ready for delivery.

The safety with which guns of this weight are handled on the regula tion carriage shows that mechanical carriages are not necessary; but it is clearly desirable to reduce the number of men required to manage them, that fewer men may be exposed and the ships' crews reduced, or that re liefs may be provided, if an excess is supplied, for the other duties of the ship. It is also certain that the crude methods so long in use for work ing guns in broadside must give way to improved plans more in conso nance with the precision of the guns.

RIFLE HOWITZERS.

A battery of twelve breech-loading howitzers, of 350 pounds, has bee furnished to the Naval Academy for instruction. Several others are i progress, and they will be issued to ships as fast as limited appropriation will permit. After extended trial the usual serge bag has been adopte for the cartridge. The pieces may, however, be readily adapted to th metallic cartridge should it hereafter be considered preferable. Tria has also been made of a 3-inch steel howitzer, using a metallic cartridg devised by Mr. B. B. Hotchkiss, a well-known inventor in military affair for comparison of effect.

REVOLVING CANNON.

It is the aim of the bureau to keep pace with all new inventions whic promise useful results, and it has, therefore, obtained for trial one o Hotchkiss' revolving cannon, of the class adapted to naval purposes firing explosive shells of one pound.

The experiments which have been made with this arm in Europe show that it fills a gap between the howitzers and the machine-gun firing small arm ammunition, especially as a defense against surface torpedo-boats

MACHINE-GUNS.

Machine-guns, whose effects were at first much exaggerated, have no assumed their proper value—a useful adjunct to other arms, but no taking the place of either the howitzer or the rifled small-arm.

They all possess serious defects, and most of the new inventions ar in the direction of simplicity and accessibility of the working part The value of the gun as a machine consists in the rapidity, simplicity and certainty of the feed and extraction; as an implement of warfar on the perfection of the cartridge.

be Gatling gun is in use in the naval service. The Gardner, Bailey, Lowell battery-guns have been experimented with during the year, the results reported in appendix. The Lowell battery-gun appears ssess decided advantages over its competitors.

SMALL-ARMS.

hen the Navy adopted its present arms, in 1869, it conformed to the y standard, caliber .50; since, the standard has been changed to .45. s of great importance that we should have unity of caliber with ster service in this their special arm, and I recommend an appro- on for transforming our small-arms and machine-guns to that cali- When the conversion is made, I am decidedly of the opinion that ould adopt a magazine-gun, which, for naval purposes, is in every ct preferable.

TORPEDOES.

torpedo-station, under the charge of Capt. K. R. Breese, assisted able corps of officers and professors, continues a career of marked ness, and I cannot too strongly recommend liberal appropriations support.

ile it is true that invention is stimulated by the necessities of war, ctual service the test of efficiency, principles are best studied in isure of peace. It requires the combined efforts of the electrician, st, and practical officer to devise a system and detect the defects usible devices.

ce the school was established, in 1869, one hundred and fifty-three s of all grades, from captain to ensign, have attended the course truction. As the subjects of investigation were in a very chaotic at its inception, it has advanced slowly and with a very moderate diture, until it is now quite complete in all of its departments.

h the exception of the two experts, Prof. Moses G. Farmer, of icity, and Prof. Walter N. Hill, of chemistry, all the instructors ficers, graduates of the torpedo-school, which, with the ordnance- at the Washington navy-yard, may be considered as schools of ce complemental to the Naval Academy course. Valuable practi- ggestions are received from graduates in sea-service tending to the vement of the system, and no difficulty is found in obtaining com- t reliefs when the necessity of freshening up their sea-service re- a change in the instructors.

subject of movable torpedoes has made no progress during the ear. The station Lay and Ericsson torpedoes were sent to the nnial Exhibition as part of the naval exhibit. Captain Ericsson proved the simple torpedo of his design, with a view to increase ed, and further trials will be made in the spring. Mr. Lay l a second boat for trial, but has not yet succeeded in obtaining sfactory speed with his device. I am of the opinion that the abil- direct the course from the shore would not warrant accepting a ss than twelve knots as a compensation for the great cost and ex nature of this device and appendages. He has not succeeded aining more than one-half that speed.

fish-torpedo of Whitehead is launched with great accuracy at the f eighteen knots in smooth water for a distance of 200 yards, but, he latest information, it does not appear to be successful at sea.

development of the locomotive-torpedo is of the highest interest, yet we are only groping for a solution.

There has been completed and put in service a fast torpedo-laun the "Lightning," designed by Mr. J. B. Herreshoff, of Bristol, R. under the direction of the bureau, which has made a run of twenty m in one hour, and for short distances a speed of upward of twenty-t miles, fulfilling all the conditions required.

Some experiments have also been made with a service-launch s plied with a safety-coil boiler and engine adapted to it by the sa builder, which uses salt water, makes steam very promptly, weighs v much less than the service fittings, and is entirely safe from damage the explosion of the torpedo attached to the launch.

Professor Farmer, who has been identified with the electrical atta ments for guiding the Lay submerged boat, has also at my suggest arranged a very compact attachment to be placed in any steam-laun which, with no alteration in her fittings, starts, stops, steers her, and plodes at will the torpedo attached. This device can be fixed in pla or removed in ten minutes, but is very little of an incumbrance if p manently fixed.

GUNPOWDER.

The stock of gunpowder has been allowed to fall quite low pendi experiments for its improvement; these are now completed, and as t large grain now in use cannot be made with advantage in haste or d ing the winter months, nor does it damage by keeping, I recommend appropriation of $100,000 for the purchase of 4,000 barrels.

MAGAZINES.

The naval magazine at Ellis Island, in the harbor of New York, a that at Chelsea, near Boston, should be reduced to places of deposit ammunition for ships fitting for sea. There has been very much unn essary inquietude of the public mind, but there is no doubt that th are in dangerous proximity to important interests. It is evidently i possible to remove the reserve stock until some other storage is p vided, and it is not probable that a suitable site could be secured a the necessary buildings erected in a safe but easily accessible locat for less than $200,000 for each. I therefore recommend an approp tion of $400,000 for this purpose.

The improvements at the Norfolk station, for which an appropriat was made last year, are in progress.

APPENDIX.

A number of important reports are appended, giving in detail sc matters enumerated in the foregoing.

I have the honor to be, very respectfully, your obedient serva

WILLIAM N. JEFFERS,
Chief of Bureau

Hon. GEORGE M. ROBESON,
Secretary of the Navy.

Estimates of appropriations required for the service of the fiscal year ending June 30, 1878, by the Bureau of Ordnance, Navy Department

Detailed objects of expenditure, and explanations.	Estimated amount which will be required for each detailed object of expenditure.	Amount appropriated for the current fiscal year ending June 30, 1877.
SALARIES.		
Chief clerk, per Rev. Stat., page 70, section 416; and per act of August 15, 1876	$1,800	.....
Draughtsman, per Rev. Stat., page 70, section 416; and per act of August 15, 1876	1,800	.....
One clerk of class three, per act of August 15, 1876	1,600	.....
Two clerks of class two, per act of August 15, 1876	2,800	.....
One messenger, per act of August 15, 1876	840	.....
One laborer, per act of August 15, 1876	720	.....
	9,560	$9,560
CONTINGENT EXPENSES.		
Stationery, books, and miscellaneous items, (appropriated,) per act of August 15, 1876	800	400
ORDNANCE AND ORDNANCE STORES.		
Fuel, tools, and material of all kinds necessary in carrying on the current daily work of mechanical branches of the ordnance department of the several navy-yards, magazines, and stations, (appropriated.) per act of June 30, 1876	86,276	50,000
Labor at the several navy-yards, magazines, and stations, in fitting ships for sea, and in preserving ordnance material, (appropriated.) per act of June 30, 1876	180,957	125,000
Miscellaneous items, to wit: Freight to foreign and home stations; advertising and auctioneer's fees; cartage and express-charges; repairs to fire-engines, gas and water pipes; gas and water tax at magazines; toll, ferriage, foreign postage, telegrams, &c, (appropriated.) per act of June 30, 1876	7,425	3,000
NOTE.—The above estimates are based on the experience of several years, and the amounts are necessary for the efficiency of the service.		
Experiments in ordnance at naval experimental battery and navy-yard, Washington, (appropriated,) (18 Stats. at L., page 549)	15,000	.....
	289,658	178,000
Necessary repairs to ordnance buildings, gun-parks, magazines, boats, lighters, wharves, machinery, and appendages, including—		
Navy-yard, Portsmouth, N. H.:		
General repairs, (appropriated,) per act of June 30, 1876	1,550	.....
Navy-yard, Boston, Mass.:		
To engines, machinery, &c., (appropriated,) per act of June 30, 1876	500	.....
To ordnance buildings and grounds, (appropriated,) per act of June 30, 1876	2,000	.....
To buildings and grounds at magazine, (appropriated,) per act of June 30, 1876	2,000	.....
Navy-yard, Brooklyn, N. Y.:		
To the ordnance dock, (appropriated.) per act of June 30, 1876	22,258	.....
NOTE.—Attention is called to the absolute necessity for this expenditure at magazine, and for general repairs.	4,060	.....
Navy-yard, Washington, D. C.:		
To gun and shot parks, experimental and saluting batteries, (appropriated,) per act of June 30, 1876	2,500	.....
To engines, machinery, and furnaces, (appropriated,) per act of June 30, 1876	500	.....
To store-house at branch magazine, (appropriated,) per act of June 30, 1876	1,000	.....
Navy-yard, Mare Island, Cal.:		
To buildings, (appropriated,) per act of June 30, 1876	50	.....
To gun and shot racks and grounds, engines, machinery, &c., (appropriated,) per act of June 30, 1876	2,000	.....
To magazine buildings and grounds, (appropriated,) per act of June 30, 1876	1,000	.....
To magazine wharf, (appropriated,) per act of June 30, 1876	1,000	.....
Naval experimental battery, Annapolis, Md.:		
General repairs to buildings, wharf, &c., (appropriated,) per act of June 30, 1876	1,236	.....
	41,654	10,000
NOTE.—For several years the appropriation for repairs has been so much reduced that the buildings and wharves, which are necessarily in exposed situations, are becoming quite dilapidated.		
IMPROVEMENTS AS FOLLOWS, VIZ:		
Navy-yard, Boston, Mass.		
At magazine, Chelsea:		
General repairs, grading and improving the grounds, (submitted)	1,000	.....

Estimates of appropriations required for the service of the fiscal year, &c.—Continu

Detailed objects of expenditure, and explanations.		Estimated amount which will be required for each detailed object of expenditure.	Amount appropriated for the cur-
Navy-yard, Mare Island, Cal.			
At magazine:			
Construction of gun-skids and shot-beds, (submitted)		$5,000	.....
Filling and tank-house near magazine for filling powder and shell, and stowing empty tanks, (submitted)		2,500	.....
		8,500	.....
TORPEDO CORPS.			
Labor, (appropriated,) per act of June 30, 1876		8,000	
Material, (appropriated,) per act of June 30, 1876		1,000	
Coal and gasoline, (appropriated,) per act of June 30, 1876		4,200	
Freight, express charges, postage, &c., (appropriated,) per act of June 30, 1876		500	
Instruction of officers in electricity, (appropriated,) per act of June 30, 1876		3,500	
Instruction of officers in chemistry and explosives, (appropriated,) per act of June 30, 1876		3,500	
Instruction of officers in torpedoes, (appropriated,) per act of June 30, 1876		500	
NOTE.—The above amounts are based upon simply caring for Government property, receiving and forwarding outfits of ships, &c.			
For general purposes, viz:			
Material	$5,000 00		
Labor	10,000 00		
Fuel	6,000 00		
Repairs	1,000 00		
Sea-wall	5,000 00		
		27,000	
Electrical apparatus for instruction in electricity		7,245	
Material for electrical department		2,050	
Apparatus and material for improvement of torpedoes		2,393	
Apparatus and machinery to further develop the application of electricity to purposes of signaling and the lighting of ships		6,425	
Chemical apparatus and instruments for instruction		12,150	
Instruction in torpedoes, including steel torpedo-launch and general experimental work with torpedoes		39,300	
Experiments with submarine projectiles		5,000	
		122,763	
NOTE.—The above estimates are based upon progressive action, and to enable the Torpedo Corps to attain an advance over other countries, or at least to keep even with them.			
CONTINGENT.			
Contingent expenses of the ordnance service of the Navy, (appropriated,) per act of June 30, 1876		1,000	
ORDNANCE AND AMMUNITION.			
Supplementary.			
For the batteries of ships and as a reserve:			
20 smooth-bore 11-inch guns converted to 8-inch rifles, at $2,700, (submitted)		54,000	
20 carriages for same, at $3,800, (submitted)		76,000	
2,000 projectiles, at $18, (submitted)		36,000	
700 barrels powder, at 30 cents per pound, (submitted)		21,000	
For the armament of five double-turreted monitors, viz: Puritan, Monadnock, Miantonomoh, Amphitrite, and Terror:			
20 12-inch rifles, at $15,000, (submitted)		300,000	
20 carriages, at $6,000, (submitted)		120,000	
2,000 projectiles, at $50, (submitted)		100,000	
2,000 barrels powder, at 30 cents per pound, (submitted)		60,000	
		767,000	

Respectfully submitted.

WILLIAM N. JEFFERS,
Chief of Bureau of Ord

BUREAU OF ORDNANCE, NAVY DEPARTMENT,
October 1, 1876.

UNITED STATES TORPEDO-STATION,
Newport, R. I., September 8, 1876.

SIR: In obedience to the Department's order of the 18th of August, the board met and organized for the purpose of witnessing the examination of the officers under instructions at this place.

The commanding officer, with the instructors and professors of the station, extended us every facility in inspecting the various buildings and the chemical and electrical appliances of the establishment. We take pleasure in saying that everything was found in admirable order and well adapted to the purposes in view.

The examination programme, as submitted by the commanding officer, was not interfered with, except in some minor matters.

We found the class to be proficient in chemistry, electricity, and in all the necessary detail of fitting torpedoes for service, as proved to us by actual experiments.

Each member of the class exhibited a marked cheerfulness in the programme of duty, and a commendable interest in mastering the course laid down for them.

We cannot speak too highly of the great benefit which the station receives, and through it the service, from the valuable experience and able services of the commanding officer and the post-graduate instructors on duty here.

The advantage of the station as a school of special training in a science that is growing daily in its importance as an element of great power in war is manifest. We indulge the hope that its scope of action may be much extended in furthering the great good that the service now realizes from it.

The marked proficiency exhibited by the class of officers after a brief course of three months is an ample argument in favor of the practical advantages of the station, as well as a sufficient assurance to us that all who have been charged with bringing this about have performed that duty with great zeal and to a good purpose.

To continue this good work we would urgently recommend that the tug Nina, with her complement of men, be retained here as an indispensable adjunct to the successful accomplishment of the necessary practical work of the station. To withdraw her or her crew at this time would, in our opinion, work with serious disadvantage to the best interest of the station.

We urge also the need of a service steam-launch, fully fitted, as a means toward the fuller development of the object of the institution.

We would add that the facilities of the station for the instruction of officers and men in submarine work are excellent, and we feel that we cannot too strongly urge that the opportunity be seized to furnish the Navy with officers and men trained to operate against submarine defenses or obstructions.

We are, sir, very respectfully,

J. W. NICHOLSON,
Commodore, and President of Board.
J. C. P. DE KRAFFT,
Captain, and Member.
R. F. R. LEWIS,
Commander, and Member.
W. S. SCHLEY,
Commander, and Member.

Commodore W. N. JEFFERS, U. S. N.,
Chief Bureau Ordnance, Navy Department, Washington, D. C.

UNITED STATES TORPEDO-STATION,
Newport, R. I., March 18, 1876.

ASSIGNMENT OF THE OFFICERS OF THE STATION TO DUTY.

Lieut. G. A. Converse, U. S. N., senior assistant inspector of ordnanc instructor in electricity, fuses, and diving.

Lieut. R. B. Bradford, U. S. N., assistant inspector of ordnance, i structor in torpedoes.

Lieut. W. J. Moore, U. S. N., assistant inspector of ordnance, draugh man, and in charge of drawings, plans, &c.

Lieut. A. R. Couden, U. S. N., assistant inspector of ordnance, i structor in electricity.

Gunner Wm. Burditt, U. S. N., in charge of machine-shop.

Prof. M. G. Farmer, electrician.

Prof. W. N. Hill, chemistry and explosives.

Mr. C. A. Pitkin, assistant chemist.

COURSE OF INSTRUCTION.

Embraces the months of June, July, and August.

The attendance of officers for instruction will be from the 9.30 a. m boat to the 2.20 p. m. boat.

The day is divided into two periods: First period, from 9.45 a. m. t 11.45 a. m.; second period, from 12.15 p. m. to 2.15 p. m.

The following division of time will be observed unless due notice i given of change:

	First period.	Second period.
	9.45 *a. m. to* 11.45 *a. m.*	12.15 *p. m. to* 2.15 *p. m.*
Mondays	Electricity.	Electricity.
Tuesdays	Torpedoes.	Chemistry or explosives
Wednesdays	Electricity.	Electricity.
Thursdays	Chemistry or explosives.	Torpedoes.
Fridays	Torpedoes.	Examination papers.

The principal instructors will assign the whole or part of a class to a period.

The officers under instruction will be divided according to rank i two parts, and be known as the senior half and junior half.

Any change of programme from the established order will be poste in the officers' room at the machine-shop.

Pocket note-books will be furnished the class for daily notes, and a blank-book for each branch of instruction, in which drawings and examinations will be recorded.

Questions bearing upon the lectures for the week will be given out o Friday, and the replies, carefully given and neatly written in the blank books furnished for the purpose, must be handed in to the commanding officer on Monday.

The books will be examined by the instructors, errors noted, and the returned by the commanding officer with such remarks as may be deeme necessary.

The final examinations will be of a practical character before the boar of visitors, and written replies to questions bearing upon the course o

instruction for the term entered in the examination-books, which are to be submitted to the board.

Opportunity will be given to officers to practice in diving and submarine work connected with torpedoes, and at the close of the term such officers as show themselves proficient will receive certificates as divers.

Officers who desire to continue their studies will be (if circumstances permit) allowed to remain, and be attached to the station.

K. R. BREESE,
Captain, U. S. N., Inspector of Ordnance, in charge of Station.

Approved:

WILLIAM N. JEFFERS,
Chief of Bureau of Ordnance.

Approved:

GEO. M. ROBESON,
Secretary of the Navy.

PROPOSED INSTRUCTION IN TORPEDOES.

Theoretical and practical lectures on Tuesdays.

Practical work on Thursdays.

The work of both days to be interchangeable, so as to avoid bad weather for practical outdoor exercises.

1.—Lecture on electricity, Farmer's machines, and fuses, preparatory to outdoor work.
2.—Lecture on the history of torpedo-warfare.
3.—Lecture on spar torpedo.
4.—Same.
5.—Same.
6.—Lecture on towing torpedo.
7.—Same.
8.—Movable torpedoes and torpedo-boats.
9.—Same.
10.—Same.
11.—Lecture on submarine guns and rockets.
12.—Lecture on ground torpedoes.

The practical work to follow the lectures, and on the same subjects, excepting that of the 2d lecture, as near as practicable depending upon progress made and means at hand for experiments.

PROGRAMME OF LECTURES FOR INSTRUCTIONS IN ELECTRICITY.

1.—Galvanic batteries: simple galvanic, describing action, &c.; different forms in use; chemical action, &c.; definition of electrical current; resistance, and other terms in common use.
2.—Measurements of currents, describing galvanometers.
3.—Law governing electrical resistance; branch currents.
4.—General electrical measurements of resistance and electro-motive force.
A.—Effects of currents, heating.
5.—Arrangement of batteries for particular work.
6.—Magnets and magnetism.
7.—Ampére's theory of magnets and electro-magnets.
8.—Magneto-electric and dynamo-electric induction.
9.—Farmer's A machine.
10.—Farmer's C machine.

11, 12, 13.—Siemen's, Wilde's, and Wheatstone's machines for torpe purposes, Beardslee's, Breguet's, Gramme's.
14.—Fuses: description of different fuses, their advantages and disa vantages.
15.—Comparison of galvanic batteries and electrical machines; und what circumstances each is advantageous; batteries for ship u
16.—Frictional electricity and Smith's machines.
17.—Electrical apparatus for Lay's boat.
18.—Telemeter: Siemen's distance measurer.

By Professor Farmer.

1.—Potential.
2.—Branch currents.
3.—Fuses.
4.—Batteries.
5.—Magnetic engines.
6.—Magneto-electro machines.
7.—Electric lights.
8.—Cables.

By Lieutenant Converse.

1.—The indicator.
2.—Circuit buoys.

PROGRAMME OF PRACTICAL WORK IN ELECTRICAL COURSE.

1.—Setting up galvanic batteries and electrical arrangements of buil ing, lead of wires, &c.
2.—Same.
3.—Use of galvanometers.
4.—Measurement of resistance and electro-motive force.
5.—Same.
6.—Measurements of insulation, half of class.
Fuse-making, half of class.
7.—Same for opposite halves of class.
8.—Resistances of wires about the island, half of class.
Fuse-making, half of class.
9.—Same.
10.—Measurements of current required for firing fuses of different m terial and various patterns, half of class.
Fuse-making, half of class.
11.—Same.
12.—Same.
13.—Same.
14.—Measurement of electro-motive force and resistance of Farme machines, half of class.
Fuse-making, half of class.
15.—Same.
16.—Measurement of batteries before and after being on short circu half of class.
Fuse-making, half of class.
17.—Same.
18.—Measurement of insulation of different splicing unions, half of cla
Fuse-making, half of class.
19.—Same.

CHEMISTRY.

Course of instruction.

Instruction given under two heads, viz: Chemistry proper, and exp sives; each treated by weekly lectures. Topics to be discussed will taken up in nearly the following order, and in the course thirteen l *tures* will be delivered.

Chemistry.

1.—Introductory and general. Most important principles of chemistry. Chemical language.
2.—Oxygen: Air.
3.—Hydrogen, water; nitrogen—ammonia; oxides of nitrogen.
4.—Fluorine, chlorine, bromine, and iodine.
5.—Sulphur.
6.—Phosphorus, arsenic, antimony.
7 and 8.—Carbon and silicon. Organic chemistry.
9.—Potassium, sodium, calcium, and magnesium.
10.—Zinc, manganese, and aluminum.
11.—Iron.
12.—Copper, lead, and tin.
13.—Mercury, silver, gold, and platinum.

Related subjects will be placed under most appropriate heads.

Lectures will be accompanied by experiments and diagrams projected by calcium light.

Explosives.

1.—General explosive reactions and effect. Circumstances of explosion and mode of firing.
2.—General condition, detonation, mode of producing detonation, composition of explosive bodies, explosive mixtures and compounds.
3, 4 and 5.—Gunpowder; composition and relations; manufacture; varieties; results of explosion.
6 and 7.—Nitro-glycerine and nitro-glycerine mixtures.
8 and 9.—Gun-cotton and gun-cotton mixtures.
10.—Picrates; picrate powder; fulminates.
11.—Explosive mixtures other than gunpowder.
12.—Applications of explosives to torpedo purposes.

The thirteenth lecture is omitted here, but will be devoted to either a review or to subjects omitted previously. This course has usually consisted of more than thirteen lectures, so it will be crowded.

Lectures will be illustrated by figures and diagrams by the lantern.

Practical work.

Process of making nitro-glycerine, dynamite, and long-stapled gun-cotton; experiments with explosives.

At times to be appointed by commanding-officer.

EXAMINATION QUESTIONS IN TORPEDOES.

1.—Explain the different types of torpedoes in use. What types are used in the naval service, and what torpedoes and torpedo supplies are furnished to cruising-ships?
2.—Describe the service spar-torpedoes, the different kinds, their construction, capacity, mode of filling, firing, kind of powder used, and give directions for preparing them for service. Give immersion necessary for the best effect, and immersion and distance necessary for safety when exercising.
3.—Describe service-spars for ship and boat use, giving dimensions, material, rigging, and attachments, mode of handling, number used, and how and where secured.

4.—Describe the manner of exploding spar-torpedoes, and all the used for that purpose, including the practical use of mach batteries, firing key, key-board, electric switches, insulated and terminal binding-screws. Where these articles are pl when in use, and where when not in use. Where are the pe nent wires, electric switches, and terminal binding screws pl how secured, and how preserved from injury?

5.—Describe the service towing torpedo, its construction, capacity, of filling when preparing for service, construction of firing a ratus, and method of igniting the charge.

6.—Describe all the various attachments of the service towing tor how used, where placed, and prepare the torpedo for service exercise.

7.—How launch the service towing torpedo, and how handle it it is launched. Tactics to be observed in maneuvering wi for attack and defense.

8.—Describe the Lay torpedo and all its attachments. Give ra speed, mode of working, and prepare it for service.

9.—Describe the Ericsson torpedo and all its attachments. Give ra speed, and mode of working.

10.—Describe the Whitehead torpedo, so far as known. Give ra speed, accuracy, and probable use.

11.—Describe in a general manner how to defend vessels of war ag torpedo-attacks of all kinds.

12.—General discussion of the subject of ground-torpedoes. object, different classes, and how used. How operated aga

QUESTIONS IN ELECTRICITY AND FUSES.

1.—Describe the construction and action of a simple voltaic circle

2.—Describe the construction and action of a sulphate of copper tery with and without a porous cup.

3.—Describe the bichromate of potash battery, station-form.

4.—Describe the Leclanché battery.

5.—Give the general formulas for current electricity based on O laws, showing the relations that subsist between electro-m force, resistance, current, quantity, and work done.

6.—What are the electrical dimensions of a source of electricity?

7.—Compare the foregoing batteries and give their relative merit different purposes, both on board ship and on shore.

8.—Having a given external resistance, R, how would you arrang cells so as to exert in the resistance R the greatest energy minute?

9.—Describe the construction and mode of operating Farmer's dyn electric machines, types A and C, and contrast their service ness with the before-mentioned forms of galvanic battery.

10.—What can be accomplished by the use of the machines above na in firing torpedoes?

11.—What abuses will they withstand, and what care should be t of them?

12.—What kind of igniters or fuses are best adapted to be used these machines, and why?

13.—Having a number, P, of fuses, how is it best to couple them to insure the simultaneous ignition of them all with a given adequate E M F and internal resistance?

14.—Wishing a fuse to be used with a voltaic battery or dynamo-ele

machine, what would guide you in the selection of material for bridge?

15.—Having suitable materials, describe process of making up an igniter for torpedo purposes. Give reasons, if any, for changing form or details of present service igniters.

16.—In improvising a metallic bridge igniter, what materials obtainable on board ship can be used? How would you determine the length of bridge for any such material?

EXAMINATION QUESTIONS IN CHEMISTRY.

1.—Explosive reaction and explosive effect.

2.—General composition of explosive bodies.

3.—Difference between explosive compounds and explosive mixtures. Classes of explosive mixtures compared.

4.—Detonation: Comparative value of a detonating explosion.

5.—Effect of circumstances on explosive results.

6.—Gunpowder: Manufacturing process; general composition; effect of mechanical variations on explosive properties of gunpowder.

7.—Preparation of nitro-glycerine: Precautions to be taken; composition of nitro-glycerine, and the chemical character of the reaction by which it is produced: properties of nitro-glycerine; its advantages and defects.

8.—Dynamite: Preparation, properties, advantages, and defects; precautions to be taken in storage, transportation, and use; mode of using, firing, &c.; safety.

9.—Carrying dynamite on board ship.

10.—Gun-cotton: Composition, preparation, and properties; reaction by which it is produced; forms in which it is prepared for use.

11.—Fulminating mercury: Preparation, uses, and mode of handling.

12.—Picric acid and the picrates; picrate mixtures.

13.—Modes of handling, using, and firing the practical explosives.

14.—Firing-points of explosives.

15.—Composition of explosive agents for torpedo purposes: Force, safety, convenience, ease of obtaining, &c.

16.—Sizes of charges for torpedoes, and effects obtained.

TORPEDOES.

Programme of practical work before board of visitors.

1.—The class to go out in the Nina and explode two 100-pounders. One with machine and service-fittings, and the other with voltaic battery. One division to each torpedo, and to do all the work themselves.

2.—To exercise with the Harvey torpedo; to rig it with an exercise-bolt and capsule; launch it and manage everything themselves; to chase and attack the Joseph Henry, if weather permits.

3.—Each division to fit and explode two 75-pounders from launches Nos. 2 and 3.

4.—Each division to fit and explode simultaneously 12 can-torpedoes, using an A machine to illustrate the method of destroying sunken obstructions.

5.—Each division to plant one torpedo of convenient size, connect it with a circuit-closer, and then explode it by bumping the circuit-closer, to illustrate the ground-torpedo.

6.—To run the torpedo-launch Lightning, with her torpedo-gear and electric light.

PRACTICAL WORK IN FUSES.

Each officer to explode wooden case and improvised igniters made by himself; results to be recorded.

PRACTICAL WORK IN ELECTRICITY.

Have A and C machines, two earth-plates, 60 feet naked copper wire, No. 16; igniters to be fired.

1.—A machine, broken circuit inside; to find fault and put in order.
2.—C machine, hammer not striking bell; to find fault and put in order.
3.—Earth not complete, insulation not removed from wire; discover fault and remedy it.
4.—Fire igniter through two wires, 30 feet each, uninsulated submerged copper wire, A machine. Fire igniter through two wires, 20 feet each, uninsulated submerged copper, C machine.
5.—Fire six igniters, naked joints, submerged in sea-water.
6.—Fire ten igniters in series A machine.

ORDER OF EXAMINATION.

Tuesday, September 5, 1876.

The officers under instruction, for convenience sake in examination will be arranged in three divisions, as follows:

First division.	Second division.	Third division.
TORPEDO-ROOM.	CHEMICAL LABORATORY.	ELECTRICAL LABORATORY.
Lieutenant-Com. Cotton.	Lieutenant-Com. Tracy.	Lieutenant-Com. Clark.
Lieutenant-Com. Whiting.	Lieutenant-Com. O'Neil.	Lieutenant Anthony.
Lieutenant Noel.	Lieutenant Newell.	Lieutenant Sturdy.
Lieutenant Chipp.	Lieutenant Irvine.	Lieutenant Lee.
Lieutenant Buckingham.	Lieutenant Paine.	Lieutenant Bassett.
Lieutenant Berry.	Master Rohrer.	Master Mahan.
Master Calhoun.	Master Busbee.	

Tuesday morning, immediately after the reception of the board of visitors, examination in chemistry and explosives.

Wednesday morning, at 9.45 a. m., examination in electricity and fuses.

Thursday morning, at 9.45 a. m., examination in torpedoes.

Friday morning, at 9.45 a. m., practical work.

Questions will be found in each of the above rooms, to which written replies are to be given, and, as soon as completed, they will be handed in to the clerk to the commanding-officer.

Any change in the above programme will be duly promulgated.

K. R. BREESE,
Captain U. S. N., Inspector Ordnance, in charge of Station.

REPORT OF PROFESSOR FARMER, ELECTRICIAN.

The course of instruction in electricity having been completed, I have to report that the course, as laid down at the commencement, has been followed.

The course has been of a practical nature, its object being to show the effects of electricity, and the manner of producing these effects. Attention has been confined, as regards sources, to the voltaic battery and induction-machines. The different methods of measuring the value of these sources under different circumstances, and the care necessary for preservation, economy, and maximum effect, have occupied much of the time.

The course was intended to teach the officers to handle electrical apparatus intelligently under any circumstances, especial attention being directed to the firing and testing of torpedoes and to lighting and signaling.

Among other subjects, my lectures to the class embraced the following:

"History and progress of electricity for two hundred years past."

Lectures on "computation of resistances."

"Meaning of different electrical terms, as quantity, Farad, Weber, &c."

"Resistances of bodies."

"Electrical resistances and potential."

"History of D. E. machines."

"Comparison between galvanic batteries and machines for ships' use."

"Electric lights."

"Telegraphs, simple, duplex, counter-duplex, quadruplex, boat-steering apparatus," &c.

REPORT OF INSTRUCTION IN ELECTRICITY, FUSES, AND DIVING, BY LIEUTENANT CONVERSE.

The course of instruction as above having been completed, I have to report as follows:

Electricity.

August 30, delivered a letter on "The various methods of determining the position of a ship with reference to any individual torpedo, or group of torpedoes, in a defensive system, and the electrical apparatus used for testing and firing such torpedoes."

Explained the methods of determining the position of a ship by cross-bearings, use of plane-table, electric position-indicator, and camera-obscura. The use of testing and firing apparatus for systems of this kind.

September 4, lectured on same subject; explained use of circuit-closer, circuit-breaker, and circuit-shunts; exhibited and explained the English shutter-apparatus and the circuit-indicator used at this station.

Fuses.

As it was deemed best for the officers under instruction to have a general knowledge of electricity and the effects of electrical currents before commencing the manufacture of fuses, the instruction in this branch was not commenced until 26th June. From that date until the close of the course instruction has been given twice a week, on Mondays and Wednesdays, half of the officers being present on each day. By this arrangement each person has had twenty hours' practical work in the fuse-room.

Each officer was required to make the following fuses:

Five wooden-case igniters, D. E. 3.

Five copper-case igniters, D. E. 7.
Five service-fuses.
Three improvised wire-bridge igniters.
Three improvised tin-foil-bridge igniters.
One improvised igniter, Bradford's pattern.
One improvised igniter, Barber's pattern.
One improvised igniter, Moore's pattern.
One improvised igniter, original.

During the examination the officers have been required to explode all the wooden-case D. E. 3 and improvised igniters. Results were quite satisfactory, showing that the igniters had, with few exceptions, been carefully and skillfully made.

Diving.

Owing to the failure to secure suitable men to be trained as divers no instruction has been given in this branch.

REPORT OF LIEUT. A. R. COUDEN, INSTRUCTOR IN ELECTRICITY.

The course of instruction in the electrical department being completed the following report of instruction is submitted:

Lectures have been delivered on the following topics:

1. Galvanic batteries.
2. Laws of electric currents and resistance.
3. Laws of electric resistance, continued, and methods of measuring it.
4. Laws of electric resistance, and methods of measuring it, continued.
5. Laws of electric resistance and methods of measuring, continued.
6. Methods of arranging batteries for different purposes.
7. Methods of arranging batteries for different purposes, continued. Heating effects of currents.
8. Magnets and magnetism.
9. Magnets and magnetism, continued.
10. Electro-magnetic induction.
11. Wilde's small machine.
12. Farmer's D. E. machine, pattern A.
13. Farmer's D. E. machines, A and C.
14. Siemens' machine; comparison with Farmer's.
15. Beardslee's, Wheatstone's, Breguet's, and Gramme's machines.
16. Smith's frictional machine.
17. Relative value of dynamo-electric machines and galvanic batteries for use in torpedo-operations on board ships and in boats.
18. Same, continued.
19. Insulation of conductors.
20. Electrical apparatus of Lay boat.
21. Electrical units, reasons for adoption of units used.

The course of lectures has been supplemented by a course of practical work, occupying four hours per week. This work has consisted in setting up different batteries and noting their action, using the various instruments and methods in measuring resistance, insulation and electromotive and resistance of different batteries and machines; calculation of resistance from dimensions and quality of conductors; calculation of

number and arrangements of battery-cells necessary to perform certain work, some for machines, and the converse—*i. e.*, having a certain source of electricity, what work can it do? practical test of such calculation; testing cables for insulation; discovering faults in machines purposely out of order, and repairing such faults; testing capacity of machines to fire through uninsulated wire; testing effect of salt-water on machines; measurement of current necessary to heat five wires of different material to firing-point of different priming-material, and other work of the same nature.

REPORT OF PROF. W. N. HILL, INSTRUCTOR IN CHEMISTRY AND EXPLOSIVES.

The course of instruction in the chemical department for the past three months has been carried on under two heads, chemistry and explosives. One course of weekly lectures on chemistry, and another on explosives, have been delivered.

The object of the chemical lectures has been the study of the most important and common elements and their principal compounds, with especial reference to technical methods and processes. I have not desired to enter deeply into theoretical chemistry, but rather preferred to discuss practical applications of chemistry in the arts. Particular chemical principles have been sufficiently taught in order to demonstrate the chemistry of explosives, a subject fully treated in the other courses.

Thirteen (13) lectures on chemistry have been given. Below will be found a list showing the subject of each, from which an idea of the course may be derived.

These lectures have been illustrated as fully as has been possible with the means at my disposal, by experiments and by sketches, drawings, &c., projected upon the screen by the calcium light.

Subjects of the lectures on chemistry.

1. Chemical principles, formulæ, and equations.
2. Oxygen: oxidation, the atmosphere, relations of the gases of the air to animal and vegetable life.
3. Oxygen concluded: ozone. Hydrogen: water; natural waters, and the impurities found in them.
4. Natural waters concluded. Nitrogen and oxides of nitrogen.
5. Nicric acid. Acids, bases, and salts. Compound radicals.
6. Ammonia. Fluorine and chlorine. Etching and bleaching.
7. Oxides of chlorine. Bleaching-powder. Bromine and iodine.
8. Sulphur: manufacture of oil of vitriol.
9. Sulphuric acid concluded. Phosphorus, manufacture and use of.
10. Antimony and arsenic, silicon and silicates, glass.
11. Carbons: oxides of carbon; liquid carbonic acid.
12. Carbon concluded. Iron and iron smelting.
13. Metallurgy of iron concluded; cast and soft irons; steel and Bessemer steel.

In the lecture on explosives, I have discussed explosive action and effect, generally considered, and the composition, preparation, and use of explosive agents, with especial reference to their application to torpedoes.

These lectures have been illustrated by drawings, figures, &c., of apparatus and machinery projected upon the screen.

The scope of this course will be seen from the following list of subjects of the lectures.

Twelve (12) lectures have been delivered.

Subjects of the lectures on explosives.

1. Explosive reactions; cause of the *explosive* character of a chemical reaction; influence of the time of an *explosive* reaction on the effect obtained. Detonation.

2. Comparative value of detonation. General composition of explosive bodies. Explosive mixtures. Classes of gunpowder begun.

3. Gunpowder. Natural and artificial production of saltpeter; refining saltpeter.

4. Gunpowder continued. Refining sulphur; preparation of the charcoal. Dry mixing. Stamp and wheel mills.

5. Gunpowder continued. Pressing, granulating, and drying powder. Tests of gunpowder. Products of explosion. Temperature. Pressure and work of explosion.

6. Gunpowder concluded. Effect of physical and mechanical condition of gunpowder on its explosion. Varieties of gunpowder. Chlorate mixtures.

7. Nitro-glycerine. Constitution and properties; materials for making; process of manufacture.

8. Nitro-glycerine continued. Mode of firing. Storage. Transportation and handling. Use and relative force. Products of decomposition.

9. Nitro-glycerine concluded. Dynamite. Other nitro-glycerine preparations.

10. Gun-cotton. Composition, preparation, and properties. Forms, uses, and force. Products of decomposition.

11. Picric acid. Constitution. Picrates and picric powder. Fulminating mercury.

12. Fulminating mercury concluded. Fulminating silver. Chloride, bromide, and iodide of nitrogen. Fuse-mixtures. Explosives in torpedoes.

The officers under instruction have received copies of the Notes on Explosives, the pamphlet published by the Bureau of Ordnance, which was originally drawn almost entire from the notes of this course of lectures as delivered in 1874–'75. As they were to have this work, I have made these lectures, this time, as far as possible, supplemental and additional to it, so that with it and their notes taken in the lecture-room they might have a pretty general and complete view of the subject.

In addition, the process of making nitro-glycerine and dynamite have been performed before them and with their assistance, and the properties of these agents experimentally demonstrated.

The officers under instruction have been required to take full notes of the lectures. Each week a series of questions on topics covering the week's instruction has been posted, and they have been required to answer these questions in the books furnished for the purpose and hand in these books for examination. I have regularly examined and corrected their books each week, reporting to that effect.

I think, therefore, that the course of instruction directed has been carried out quite fully.

The officers under instruction have been attentive and interested in their work, and have, in general, performed it in a very satisfactory manner.

REPORT OF LIEUT. R. B. BRADFORD, INSTRUCTOR IN TORPEDOES.

The course of instruction in torpedoes just completed has embraced seventeen (17) lectures of two hours each, and ten periods of practical work.

The lectures were on the following topics, and given in the order mentioned:

1. One lecture on the sources of electricity for exploding torpedoes, use of machines and batteries and mode of fitting and exploding fuses and exercise torpedoes, preparatory for out-door practical work. Illustrated with blackboard sketches and experiments.

2. One lecture on the history of torpedo warfare. Illustrated.

3. Five lectures on the spar-torpedo. These included a general description of the use of this type of torpedo from its commencement up to the present time, a full description of all service material and supplies connected with the spar-torpedo as now used in the different classes of vessels in the Navy, and proposed improvements that might hereafter be introduced. Illustrated with many scale drawings, blackboard sketches, and models.

4. Four lectures on the subject of towing-torpedoes. These included a complete description of the various kinds of towing-torpedoes that have been used at this station, a detailed account of the present service pattern, with all its attachments, and the manner of using it offensively and defensively; also, a brief description of towing-torpedoes used in other countries, and the desirable qualities of a torpedo of this type. Illustrated with many drawings, sketches, and, as far as possible, with the service articles themselves.

5. Four lectures on the subject of movable torpedoes. These included full description of the Lay and Ericsson torpedoes, and of the Whitehead, so far as is known by our Government. Numerous other torpedoes and torpedo-boats of lesser note of this type were also described. Illustrated with drawings.

6. One lecture on submarine projectiles and rockets and ground-torpedoes. These subjects were treated of in a general manner, owing to the very limited time devoted to them. Illustrated with drawings and sketches.

7. One lecture on operations against ground-torpedoes and defense of ships against torpedo-attacks.

The note-books of the class 8″ × 10″ will average 150 pages of notes and drawings taken from the above lectures. Many of the books contain more.

The practical work of the course was arranged as far as possible to illustrate the various subjects treated of in the lectures. It embraced ten periods (half days) and was arranged as follows:

1. Two periods. Fitting and exploding exercise-torpedoes from boat-spars, using service machines and material.

2. One period. Fitting and exploding service-boat torpedoes from steam-launch.

3. Three periods. Exercising with service ship torpedoes, spars, machines, voltaic batteries, key-board, electric switches, permanent wires, and all other service material connected with the spar-torpedo on board of the Nina.

4. One period. Engaged in making improvised torpedoes and exploding 25-pound dynamite torpedoes from service-launch.

5. Three periods. Exercising with the service towing torpedo, towed by the Nina, using the schooner Joseph Henry as a target.

The use of the movable torpedoes belonging to the station could be illustrated to the class, owing to their absence.

TORPEDO-STATION
Newport, R. I., November 25, 187

SIR: I respectfully submit the following general report of the cor tion of the station, of the work done, in progress, and in contemplati together with the reports of Professor Farmer and Professor Hill their respective departments, and a paper on torpedoes, by Lieuten Bradford, United States Navy.

Respectfully, your obedient servant,

K. R. BREESE,
Captain U. S. Navy, Inspector of Ordnance in Charge

Capt. WILLIAM N. JEFFERS, *U. S Navy,*
Chief of Bureau of Ordnance, Washington, D. C.

Buildings.

Office-building.—The south end of this building is used for quart for the inspector of ordnance in charge, and the north end for offic library, draughting-room, and torpedo-lecture room. It is in fair co dition, but, in common with all the buildings on the island, needs pai ing very much.

Six cottages, comprising the quarters of three assistants to the i spector in charge, the chemist, the electrician, and the gunner in char of the machine-shop, are in fair condition, but particularly needin painting, and in some places replumbing.

The chemical laboratory building is in good condition, and embrace with its small amount of chemical apparatus, an ample lecture-room f the instruction of officers. Additional apparatus and facilities are r quired for this building, which have been estimated for.

A windmill in the yard to this building, erected over an artesian wel with a pump attached, has saved much labor in supplying water for th nitro-glycerine building and its attachments, and has also been mad use of to supply the boiler to the machine-shop and the steam-launche A reservoir in connection with this mill is much needed to store u water in the event of calms or drought, and an estimate is presente therefor.

The buildings for the manufacture of nitro-glycerine, gun-cotton carbonic-acid gas, &c., are of a temporary character, and of sufficient means for experimental purposes.

The small magazines for the storage of small quantities of nitro-glycerine and other explosives collapsed this spring, as reported, and the two new ones authorized by the bureau have been completed, and are now in use. Two more of the same character are required, and are embraced in the estimates. As only 50 pounds of nitro-glycerine or its compounds can be kept on the island, it is desirable that suitable places should be prepared on Rose Island for the care and preservation of the main store of such matter Authority for this has been kindly granted by General Warren, United States Engineers, in charge, and proper receptacles from the old casemates can be made at small expense. An estimate for this is also submitted.

The electrical building is in excellent order, but needs enlargement and much additional apparatus, which has been estimated for, and is embraced in the estimates submitted to the bureau.

The store-house is ample for present needs, and is in excellent con dition.

The machine-shop is in good condition, and its capacity is sufficient for the wants of the station, aided, as it may be, by the manufacturing establishments of Newport and Providence. The blacksmith-shop I would recommend to be removed to the outside of the building adjoining, and its room given to the main shop as an assembling room for manufactured articles, which is much needed.

The steam fire-engine is placed near the coal-shed and is fed from the harbor. At low-water it can only draw from its reservoir—a hole dug around the suction—and which could hardly supply a half-hour's demand. I would recommend that it should be moved away from all buildings, and to a position where it could take its supply from deep water and independent of the tides. The cost of this is also estimated for.

The men's quarters have been fitted up from the old machine-shop, and will comfortably accommodate the service-men intended by the bureau to be kept here for instruction in submarine work.

The stable is ample and in good condition, but would be much improved by raising about six feet.

The coal, coming under the cognizance of the Bureau of Equipment, has been lying on the bank and rather scattered, on account of the cost involved in piling. To remedy this, a place has been partially prepared to receive all further supplies, and a small expense will adapt it to all the requirements of the future.

I would recommend particularly to you the construction of a room for the instruction of officers in torpedoes, and large enough to embrace a collection of material necessary to exemplify the lectures. Also, a permanent boat-house or shed sufficiently large to cover all the boats hauled up for the winter.

There have been constructed, under the orders of the bureau, the following outhouses and sheds:

Two small outhouses in laboratory-yard for holding different chemicals not desirable to keep in the main building, and for the care of fuses, igniters, &c. They are sufficient for their purpose.

A filling-house at the junction of the wharf with the island, for the reception and filling of torpedoes used in practice, supplies a hitherto much-needed want.

A boat-shed on the wharf for the reception of oars, buoys, lines, grapnels, &c., together with torpedo-fittings for boats, has been of great service, by having a place for such things and for their better care.

A boat-house built expressly for two Lay torpedo-boats, and with means to successfully work them therefrom without regard to tide.

The old Lay boat-house, of a very frail character, after having blown down once, has been sufficiently strengthened to answer temporarily as a lime-house and paint-shop.

The powder-magazine is in excellent condition, and of ample capacity for the wants of the station.

In obedience to the bureau's directions, the "torpedo instructions" have been prepared by the naval officers attached to the station and submitted to the bureau for approval.

There are under consideration for dissemination in the service, by orders of the bureau, the subjects of—

Defense by torpedoes.
Attack against torpedoes.
Offensive use of torpedoes.
Instruction to divers.
Submarine work.

Torpedo fittings for boats.

An improvement by Lieutenant Converse, U. S. N., over the service-fittings for boats, has been sufficiently experimented with to warrant its attachment to the service-launch Success. It is intended to use the torpedo ahead or abeam at pleasure from the same spar.

The fittings for the Lightning were described at length in the report upon that boat.

Steam-launches.

Steam-launch No. 1 (Billow) is in use as a ferry-launch, is in good condition, runs economically, and is admirably adapted for her purpose.

Steam-launch No. 2 (Wave) is used for torpedo experiments; is old, in not very good condition, nor is it well adapted for torpedo purposes. It answers very well as a relief boat to the ferry-launch.

Steam-launch No. 3, (Ripple,) experimental launch, is now fitted with a propeller designed by Lieutenant Barber, U. S. N. This boat was in use by the frigate Congress until sunk in the North River, where it lay for seven months; and, as may be supposed, is not now in first-rate condition, and is only useful as a boarding-boat to men-of-war on their arrival and for the exchange of officers' visits.

Steam-launch No. 4 (Fowler) has just been returned to the station, after an absence of about two years. This boat was long experimented with with the Fowler wheel, but is now returned with the Mallory wheel. The hull only of this boat, which is of steel, is in good condition.

Steam-launch No. 5 (Success) is an English built so-called life-boat launch; is in excellent condition, being fitted with Herreshoff's boiler and engines. This launch is fitted for torpedo purposes as a service-launch.

Steam-launch No. 6 (Lightning) has already been described.

Rowing-launch No. 1 is the Niagara's old launch; is in good condition, and answers admirably its purposes as a freight-boat, planting torpedoes and circuit-closers, laying electric cables, splicing, &c.

Rowing launch No. 2 is fitted and used solely for class instruction in torpedoes.

Rowing launch No. 3 is fitted as a torpedo-launch for class instruction, and particularly as a diver's boat for submarine work.

Two small pulling boats for general purposes, in good condition.

The schooner Joseph Henry, purchased from the Coast Survey for experimental purposes, (blowing up,) has been found to be well suited as a moving target for practice with towing-torpedoes, and is now retained for that purpose.

The iron caisson, for experiment with submarine projectiles, is in excellent condition, and much is hoped from it when enabled to proceed with work.

Lay torpedo-boat.

New flasks having been made for the Lay torpedo-boat, for the instruction of the class, Lieut. R. B. Bradford, U. S. N., was directed to get the boat in working order, and after much patient and wearying labor he got the boat into excellent working condition, and I have been assured by all who have had the power to compare that it worked better than ever.

Improvements in this boat were suggested to me by different officers of the station, and, upon representation to the bureau, authority was granted to alter the Lay boat according to the plans suggested. Before

work could be commenced this authority was revoked, and the announcement made that the bureau had agreed to purchase a new Lay torpedo-boat, if upon trial it came up to certain conditions. This new Lay torpedo-boat was brought here by Mr. Lay, and it became evident that it could never reach the required speed in its then condition, and a critical examination failed to make its advantages apparent, over what it was conceived in the minds of the officers of the station the old boat was susceptible of becoming, except in point of size. No official trial was held, but all the trials were witnessed by more or less of the officers of the station. The boat was finally removed to Washington by Mr. Lay, upon the authority of the bureau, granted at his request.

The Ericsson torpedo.

The trials of the Ericsson torpedo were brought to a successful conclusion, detailed reports of which were submitted to the bureau.

Towing torpedoes.

Experiment has been conducted on the towing-torpedo designed by Lieutenant Barber, U. S. Navy, and upon that of Lieutenant Maynard, U. S. Navy, but from want of facilities experiment has ceased.

The tug Nina.

The Nina, fitted and used as a torpedo-vessel, has been attached to the station almost since its foundation, and with her crew has been an essential feature of the station. Without this vessel or an equivalent much interesting experiment must be wholly stopped, and an essential feature of instruction of officers given up. By means of this vessel great improvements in rigging and carrying the torpedo-spars have been successfully carried out, and a spar designed by Lieutenant Bradford has been made, so far, to answer the requirements of a torpedo-spar for ships. As the present torpedo was designed to be used ahead, and as it is becoming general to carry them abeam, a change in the design and manufacture would seem desirable, and should be experimented upon with a view of substituting new ones for those now in use. Experiments upon the lead of wires and the uses of voltaic batteries have also been made from the Nina, under Lieutenant Bradford, most successfully.

It is hoped that the requirements of the general service will not be such as to deprive the station of the very great advantages of having permanently attached to it the Nina or other proper vessel with a liberal crew.

I beg leave to refer the bureau to the letter to me from Lieutenant Bradford, accompanying this, as from an accomplished officer who has given the subject of torpedoes much thought. This letter gives in a general way the work on torpedoes that has taken place at the station, as well as the views of the writer.

The station is much indebted to the advice and work and instruction of its distinguished electrician, Prof. Moses G. Farmer, and the wise provision of the bureau in retaining him in a more permanent character has already been felt. I beg leave to refer you to his report to me, accompanying this, which gives much of the work which has been done by the electrical department of the station.

Prof. Walter N. Hill has been connected with the station since its foundation, and continues his career of usefulness in the department

of chemistry and explosives. Mr. Hill's report to me embraces principal work done at the station by him, with plans for the futc and will be read with interest, I am sure.

Lieut. G. A. Converse, U. S. N., the senior assistant, Lieut. R Bradford, and Lieut. A. R. Couden, assistants, have borne the brun instruction, and in addition to their duties as instructors have, fr their professional knowledge of the wants of the service, advanced interests very much. They are students and hard workers, and the vancement made by their predecessors is sure to be continued.

Ensign A. L. Case, jr., assigned to duty here by the bureau, in dition to the course taken by the officers under instruction, has ma a more thorough study of electricity, and has become a valuable a careful observer.

Mr. Burditt, the gunner in charge of the machine-shop, continues valuable services, and his mechanical ability is such that even wh working full force a foreman is unnecessary.

Respectfully, your obedient servant,

K. R. BREESE,
Captain United States Navy,
Inspector of Ordnance, in charge of Statio

TORPEDO STATION,
Newport, R. I., November 23, 187

SIR: I have to forward herewith the report of Lieut. G. A. Conve United States Navy, on the fast torpedo-launch Lightning, and leave to add what he has omitted, that the method of carrying the sp and the torpedo is of his device, and that the many improvements of boiler and its appurtenances were made at his suggestion and under direct superintendence.

Respectfully, your obedient servant,

K. R. BREESE,
Captain United States Navy,
Inspector of Ordnance, in charge of Statio

Capt. WILLIAM N. JEFFERS,
United States Navy,
Chief of Bureau of Ordnance, Washington, D. C.

UNITED STATES TORPEDO STATION,
Newport, R. I., October 25, 187

SIR: In accordance with your orders, I have been to witness the p formance of Herreshoff's engine and safety coil-boiler, and have bec very much impressed with them for naval purposes in boats. cheapness, lightness, and doing away with fresh water, they seem to unsurpassed, and I know of no other boiler upon which steam can raised so rapidly, and, so far as I can understand, with so much saf After a trial-trip in a boat propelled by this engine and the safety c boiler, which was most satisfactory, we stopped at the wharf, leav the boat with one hundred pounds of steam, with no one to watch it care for it. On returning, after an hour or more absence, there was steam on, and a fair fire. The boat was shoved from the wharf, an few strokes of a hand-pump in less than five minutes gave as m steam as was desired—80 pounds—steam enough being formed with

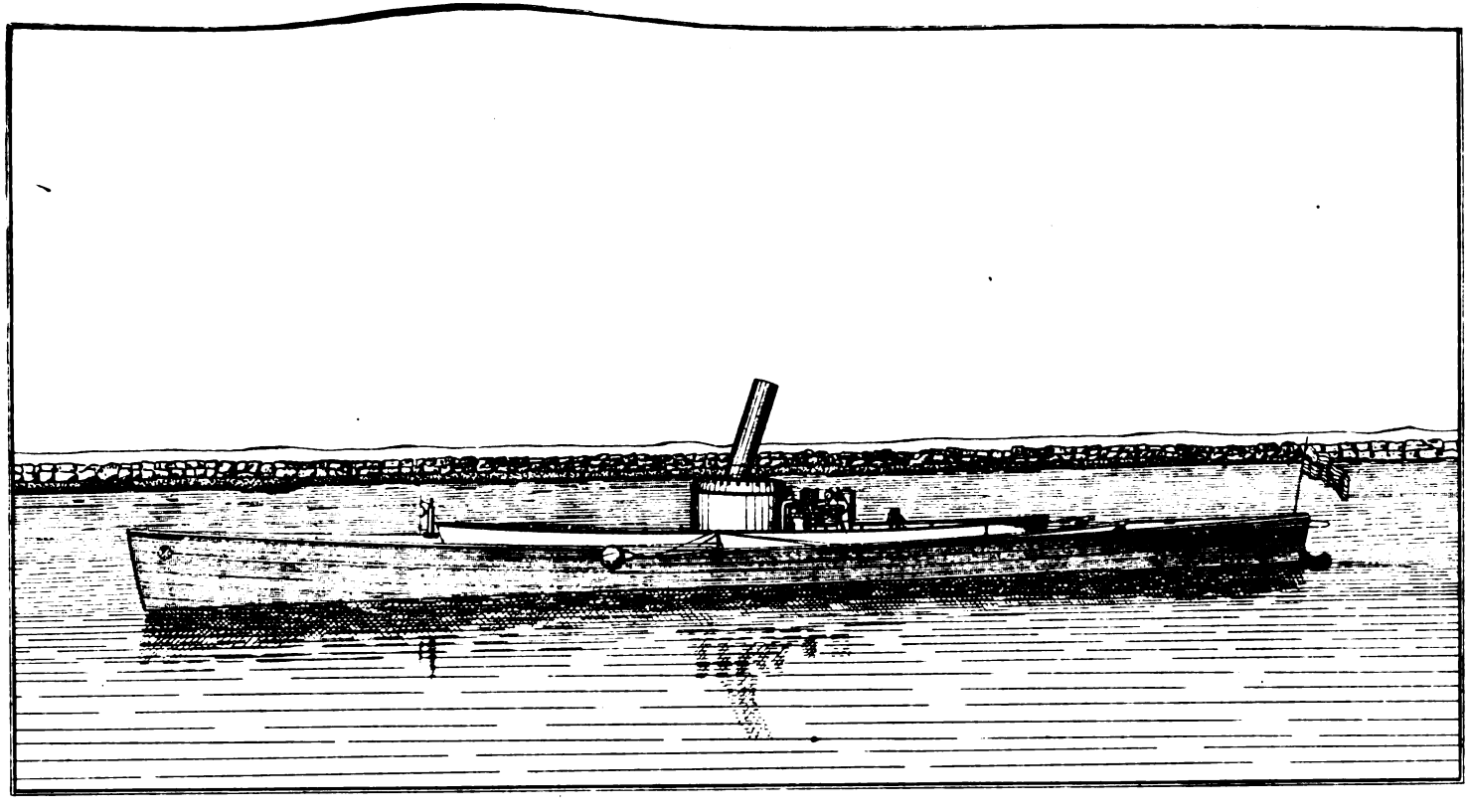

most the first stroke of the pump to start the engine. I was so much impressed with what I saw that I asked Mr. Herreshoff to submit in general terms a proposal of what he would do for a torpedo-boat, capable of greatest speed, to carry a torpedo either on bow or abeam, with a double engine, and separate engine to drive an electric machine two thousand revolutions per minute, as this would comprise a picket and torpedo boat. I have the honor to submit his estimates.

The reputation of Mr. Herreshoff is of the very highest, and his success as a yacht and boat builder well established. * * *

Very respectfully,

K. R. BREESE,
Captain and Inspector of Ordnance, in charge of Station.

Capt. WILLIAM N. JEFFERS,
United States Navy, Chief of the Bureau of Ordnance.

BRISTOL, R. I., *October* 22, 1875.

DEAR SIR: We will build you a steam-launch, suitable for a torpedo-boat, as follows: Boat to be 55 feet long, 6 feet 3 inches wide, fitted with our safety-coil boiler, and a pair of engines with the combined capacity of 60 horse-power, which will run the boat 19 miles an hour.

The boat will also be furnished with a steam-pump for boiler, and one 12 horse-power engine suitable to run an electric-light machine.

The boat and machinery to be constructed in the strongest manner and with the least weight, yet boat strong enough to sustain the machinery, when it is hoisted out of water, without any strain on it.

Said boat to be delivered at Newport on or before April 1, 1876, for the sum of $5,000.

Should the Department decide to get us to build as proposed, we will send specification in detail.

Yours, truly,

JOHN B. HERRESHOFF,
Agent Herreshoff Manufacturing Company. S. H.

Captain BREESE.

[Indorsement.]

In conversation, Mr. H. states will run for half an hour at the rate of 19 miles an hour, 16 to 16½ steadily.

K. R. B.

Specifications for building torpedo-boat for Bureau of Ordnance.

Dimensions of hull: Length over all, 55 feet; beam, 6 feet 3 inches; depth, 3 feet 3 inches.

Keel, stem and stern posts to be of white oak; keel to be sided 4½ inches.

Frame to be of white oak, steamed and bent; molded 2½ inches, and placed 11 inches apart from centers.

Outside planking to be of yellow pine $\frac{9}{16}$ inch thick.

Ceiling and floor to be of yellow pine; ceiling $\frac{3}{8}$ inch, floor $\frac{9}{16}$ inch.

Shear-streak to be of oak, $\frac{5}{8}$ inch thick.

Clamps and deck-frame to be of yellow pine; clamps $\frac{5}{8}$ inch, deck-frame 2½ inch, molded.

Deck to be of white pine, $\frac{9}{16}$ inch thick.

Space in center of boat to be left open 28 feet, with high wasl around same.

Machinery to be as follows:

To have two 5 by 10 inch engines, and one Herreshoff safety-coi of sufficient size to run said engine 400 turns per minute with 140 steam, following $\frac{3}{4}$ strokes.

Boat also to have all gauges, valves, and pipes necessary for s gines and boiler, and one steam-pump and one feed-pump conne engines.

Propeller-shaft to be of steel, after end of which is to be cover bronze.

Propeller-wheel to be of bronze.

Rudder to be of yellow metal, with steel rudder-stock.

Fastenings: Hull of boat to be fastened with galvanized ir all materials used in hull and machinery to be of first quality.

Boat to be built in our best manner, and well painted with tw of paint.

Boat also to be furnished with one engine, attached to boiler an electric machine, and to be capable of developing 12 horse-pc

The coil in boiler to be made of best-quality 2-inch exterior lap- steam-pipe $\frac{1}{16}$ inch thick.

Jacket to be doubled, of sheet-iron and brass.

Boiler to have a drum, so that salt water can be used as well a without injury to boiler.

Engines to be constructed of best materials. All studs, bol shafts to be made of Ulster iron; rods, pins, and keys to be r steel. To be furnished with the Herreshoff cut-off valves.

The boat to be properly braced.

Screw-bolts to be used in place of rivets.

We agree that the boat shall run 19 miles an hour, and that s carry two torpedo-poles of 38 feet length each, one on each sid poles to be worked from the boat with 100-pound steel-cased to on each.

The price to be $5,000 dollars, payable as follows: $1,250 wl frame of hull is up; $1,250 when hull is ready to be painted; when the boiler and engines are completed; $1,250 when the bo its machinery, is completed and tried.

The boat and machinery subject to inspection, and to be satis before the payments are made.

JOHN B. HERRESHOFF
Agent Herreshoff Manufacturing Com

Witness to signature: In presence of—
J. BUMSTEAD.

BUREAU OF ORDNANCE, NAVY DEPARTMENT
Washington City, November, 4,

SIR: Your letter of the 2d instant, inclosing specifications a tract for building one torpedo-boat, has been received.

The bureau approves and accepts the same, but with the fo modifications, viz: The speed to be 19 miles per hour for *one hou salt water*, and desire you to commence the work without delay.

I inclose you a tracing from a sketch of one of Thornycroft's fast steam torpedo-launches, which has made 21 miles per hour, developing 120 horse-power.

I am, sir, your obedient servant,

WILLIAM N. JEFFERS,
Chief of Bureau.

Mr. JOHN B. HERRESHOFF,
Agent Herreshoff Manufacturing Company, Bristol, R. I.

BUREAU OF ORDNANCE, NAVY DEPARTMENT,
Washington City, November 5, 1875.

SIR: The bureau forwards copy of the contract of the bureau with Mr. Herreshoff for the construction of the topedo-boat.

When Mr. Herreshoff reports that the boat is ready for the several inspections, you will detail an officer to make them, whose certificate will be the voucher for the several payments.

The bureau sends you, for the files of the torpedo-station, a copy of a general sketch of Thornycroft's last fast torpedo-launch, with his arrangement for using the poles abeam or on either side, which, from comparison with a photograph, the bureau believes to be substantially correct.

Thornycroft told Captain Ramsay that one of the main things in the construction of these fast torpedo-boats was to see that they were thoroughly braced, as vibration killed the speed.

I am, sir, your obedient servant,

WILLIAM N. JEFFERS,
Chief of Bureau.

Capt. K. R. BREESE,
Inspector of Ordnance, Torpedo Station, Newport, R. I.

Official trial of torpedo-boat.

NARRAGANSETT BAY,
Wednesday, 24th May, 1876.

Course.—From Usher's buoy, Bristol Harbor, to Bishop's Rock buoy, Coaster's Harbor, and return.

Distance.—From Usher's buoy to Bishop's Rock buoy, 10⅛ statute miles; total distance, 20¼ statute miles.

Coal.—English cannel.

Number of persons on board, 5.

Started fires at 9^h 41^m.

Steam; 80 pounds, at 9^h 46^m 45^s.

Time required to raise steam, 5^m 45^s.

At 9^h 46^m 45^s started up Bristol Harbor.

At 9^h 48^m stopped to set up packing of feed-pump.

At 10^h 4^m headed down for Usher's buoy.

Record of trip.

Object.	Down trip. Time passed object.	Elapsed time.	Return trip. Time passed object.	I
	h. m. s.	m. s.	h. m. s.	
Usher's buoy	10 09 00		11 56 28	
		5 04		
Southwest Point buoy	14 04		51 04	
		4 51		
Sandy Point light	18 55		44 54	
		5 47		
Dyer's Island, southwest buoy	24 42		37 30	
		11 03		
Bishop's Rock buoy	35 45		23 30	
Time over course	26 45	26 45	32 58	

Distance..... 10.12 statute miles. Time..... 26^m 45^s down t
Distance..... 10.12 statute miles. Time..... 32^m 58^s return

Total distance. 20.24 statute miles. Total time. 59^m 43^s

DOWN TRIP.

Sea.—Smooth.
Tide.—Ebb.
Wind.—Light ahead.
Steam.—Steady at 140 pounds.
Engines.—Working as well as could be desired. No parts of th chinery showed the slightest signs of heating.
Boiler.—Working well.

NOTE.—Finding that the quantity of coal on board would not b ficient to last for the return trip, it was deemed best to continue c to torpedo-station and get more. It was the first time any of the p on board had used English coal, and the consumption was much g than on previous occasions when American coal was used.

RETURN TRIP.

Sea.—Smooth.
Tide.—Strong ebb.
Wind.—Moderate breeze astern.
Steam.—Average about 100 pounds.
Engines.—Worked as well as could be desired. No parts o chinery showed the slightest signs of heating.
Boiler.—Made steam freely and worked well.

NOTE.—When a short distance above Bishop's Rock buoy the connecting with after steam-gauge blew out at joint with steam- Plugged hole with pine stick without stopping. Plug blew out times. Carried low steam while repairing. Average during retur not over 100 pounds.

Very respectfully, your obedient servant,

G. A. CONVERSE,
Lieutenant, and Assistant Inspector of Ordna

To Capt. K. R. BREESE, *U. S. N.*,
Inspector of Ordnance, in charge of Torpedo Station.

Record of times noted during trial-trip of steam torpedo-launch, May 24, 1876, by Lieut. A. R. Couden, at Bishop's Rock buoy, and Ensign A. L. Case, at Usher's buoy:

Passed Usher's buoy, from Bristol, at	$10^h\ 09^m\ 11^s$	
Passed Bishop's Rock buoy, from Bristol, at	$10^h\ 35^m\ 55^s$	
Elapsed time		$26^m\ 44^s$
Passed Bishop's Rock buoy, to Bristol, at	$11^h\ 23^m\ 48^s$	
Passed Usher's buoy, to Bristol, at	$11^h\ 56^m\ 45^s$	
Elapsed time		$32^m\ 57^s$
Total time from Usher's buoy to Bishop's Rock and return		$59^m\ 41^s$
Passed Usher's buoy, at	$10^h\ 09^m\ 11^s$ down.	
Passed Usher's buoy, at	$11^h\ 56^m\ 45^s$ up.	
Elapsed time		$1^h\ 47^m\ 34^s$
Passed Bishop's Rock at	$10^h\ 35^m\ 55^s$ down.	
Passed Bishop's Rock at	$11^h\ 23^m\ 48^s$ up.	
Time off course		$47^m\ 53^s$
Time on course		$59^m\ 41^s$

Very respectfully, your obedient servants,

A. R. COUDEN,
Lieutenant, and Assistant Inspector of Ordnance.
A. L. CASE,
Ensign, and Assistant Inspector of Ordnance.

To Capt. K. R. BREESE, U. S. N.,
Inspector of Ordnance, in charge of Torpedo Station.

[Telegram.]

WASHINGTON, D. C., *May* 25, 1876.

Captain BREESE,
Newport, R. I.:

Telegram received. Accept Lightning.

JEFFERS,
Chief of Bureau.

The boat, having been accepted by the bureau, was delivered at this station on the 1st of June, 1876.

Since the boat arrived several changes have been made in it with the view of making the piping of the boiler and connections with the engines more compact, and hence better suited for the special use for which it is designed. Modifications in the furnace, and form of exhaust-pipe, have also been made, and hard coal is now habitually used with most satisfactory results.

The torpedo-fittings have been made and put in place, and a dynamo-electric machine and electric lamp and attachments are also fitted. The boat is thus completed for service either as a torpedo or picket launch.

A number of experiments have been made with it during the past summer. The result of these experiments has been quite satisfactory, fully realizing all anticipations in regard to speed and the general fitness of the boat for the special use for which it was designed.

Arrangements have been made for having an extended trial for the purpose of determining the consumption of coal, capabilities of machinery, &c.; but the protracted unfavorable weather, and the small number of men employed at the station during the past two months have rendered it necessary to postpone the trial for the present.

Detailed description of boat.

Hull.—Length over all, 58 feet; beam, 6 feet 3 inches; depth of boat 3 feet 2 inches; draught forward, 14 inches; aft, 22 inches; dimensions of timber, &c., keel, oak, sided, $4\frac{1}{2}$ inches; boiler or bilge kelsons placed in wake of boiler and machinery; frames, oak, molded $2\frac{1}{2}$ inches, and placed 11 inches apart from centers; intermediates half-frames in wake of boiler and machinery. Planking, pine, $\frac{9}{16}$ inch thick; ceiling, pine $\frac{3}{8}$ inch thick; floor, pine, $\frac{9}{16}$ inch thick; shear-streak, oak, $\frac{5}{8}$ inch thick.

Deck.—Extends 14 feet from bow and 14 feet from stern; wash-board 8 inches high around open space.

Weight of hull, 2,800 pounds.

Boiler.—Herreshoff's patent safety coil-boiler, fitted with a feed-water heater and a separator for using salt water. Height, 5 feet 2 inches; diameter, 4 feet 2 inches; heating-surface, 130 square feet; grate-surface, 9 square feet; weight, 1,500 pounds.

Engines.—Double, direct acting; cylinders, 5 inches diameter, 10 inches stroke; fitted with Herreshoff's patent cut-off valves; shaft, rods, studs and bolts of Ulster iron; pins and keys of steel; weight, 1,040 pounds.

Propeller shaft.—Steel incased in brass; length, 27 feet; diameter steel, $1\frac{5}{8}$ inches; brass, $\frac{1}{8}$ inch thick; total diameter, $1\frac{7}{8}$ inches; weight of shaft and bearings, 340 pounds.

Propeller.—Bronze, two blades, placed abaft rudder; diameter, 3[illegible] inches; mean pitch, 60 inches; length, 6 inches; weight, 52 pounds.

Auxiliary pump.—Knowles, size No. 0; weight, (estimated,) 20 pounds.

Engine for electric light.—Single, direct acting; cylinders, $3\frac{1}{2}$ inches diameter, 7 inches stroke; fitted with Herreshoff's patent cut-off valves; fly-wheel, 20 inches in diameter; drives electric machine 2,000 revolutions per minute; weight, 250 pounds.

Total weight of boat, with permanent fittings, 6,900 pounds.

General description of boiler.

As the boiler is a novel feature of the boat, the following general description and method of operating it are given:

Description.—The boiler consists of a flat, spiral coil of 1-inch steam pipe, the exterior diameter of the coil being 42 inches. The turns of this coil are wound as close together as possible, and the outer end connects to the upper end of a vertical spiral coil of 2-inch steam-pipe, the diameter of this coil being 42 inches and height 3 feet 4 inches. The turns of the vertical coil are separated $\frac{3}{16}$ of an inch, and the lower end is connected to the upper end of the separator.

The bottom of the vertical coil is placed about 10 inches above the grate-bars, resting on fire-brick, which forms the outside of the furnace, and being firmly secured by upright braces. The interior of the coil

Boiler of Steam Torpedo Launch "Lightning."

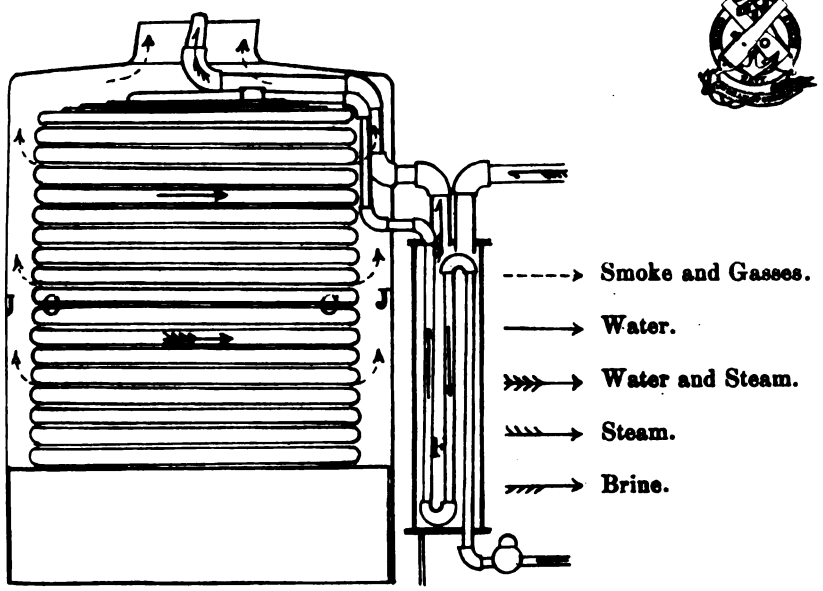

Jacket of Boiler removed—Section through Feed Water Heater.

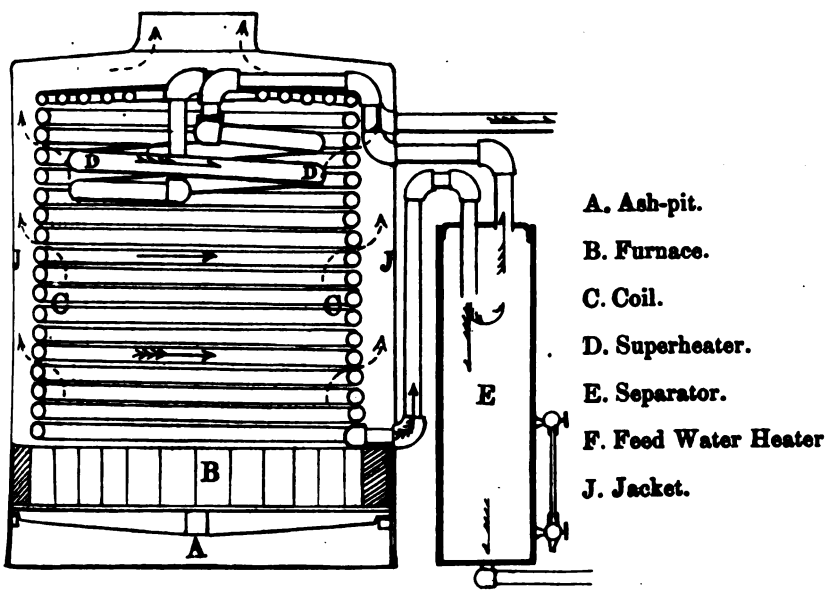

Section through Boiler and Separator, showing Superheater.

thus forms a large combustion-chamber, the smoke and heated gases escaping through the spaces between the turns of the vertical coil, egress through the top being prevented by the closeness of the coil and a shade or cover placed over it for this purpose.

The whole is inclosed by a jacket, which serves to confine the smoke and heated gases and conveys them to the smoke-pipe, a space being left between the outside of the coil and inside of the jacket.

The separator is a cylinder made of $\frac{1}{4}$-inch boiler-iron, 12 inches in diameter and 3 feet high, placed on end abaft the boiler. The pipe leading from the lower end of the boiler-coil enters the top of the sepatator, and projects about 8 inches inside. A pipe called the bottom blow-pipe, fitted with a suitable valve, connects to the bottom of the separator and leads overboard. On one side of the separator, near the bottom, is fixed a glass water-gauge.

The feed-water heater is a cylindrical chamber, made of iron $\frac{1}{16}$ of an inch thick, 8 inches in diameter and three feet high, placed on end abaft the boiler, and near the separator. The exhaust-steam from the cylinders of the engine enters this chamber, and then escapes through the exhaust-pipe up the smoke-stack. From the bottom of the chamber there is a small pipe leading overboard, through which the water condensed from the steam escapes. Inside the chamber are several short pieces of 1-inch steam-pipe, joined at the ends so as to form one continuous length. One end of this group of pipes connects to the inner end of the flat spiral coil of the boiler, and the other end is connected to the engine-feed pump, and also to the auxiliary steam and hand pump.

Method of operation.—After the fires have been started and the pipes have become warm, water is forced into the coil of the boiler by means of the hand-pump. The water enters the coil at the top, which, being farthest from the fire, is coolest.

As it descends in the spiral coil it gradually gets hotter, and a part of it is converted into steam. The unconverted water and steam are both discharged into the separator, the water or brine falling to the bottom.

The steam rises to the top of the separator and escapes through the pipes leading to the separator and main steam-pipe, from which it is taken to the main engines, steam-pump, auxiliary engine, and ejectors.

After steam commences to form, the steam-pump can be used, or the main engines started, to feed the boiler.

The unconverted water, or brine, in the bottom of the separator, is allowed to escape through the bottom blow-pipe, the valve of which is always left slightly open. The quantity of water which comes over unconverted can be ascertained by the glass water-gauge attached to the separator.

In the Lightning the bottom blow-valve is usually left open $\frac{1}{8}$ of one turn, and the supply of feed-water regulated so that the brine shall stand from two to six inches high in the glass gauge.

Should the amount of water in the gauge increase, the supply of feed-water should be reduced, as too great a quantity of water will cool the coil and lower the steam-pressure.

Should the water decrease in the glass gauge, the quantity of feed-water should be increased, as the steam may become so highly superheated as to be injurious to the engines, being liable to cut them when used for a long time.

For short spurts with the boat, however, the water has frequently been allowed to disappear from the gauge and the bottom blow-valve has been entirely closed, the cylinders of the engine being constantly

lubricated. By this device the steam-pressure has been raised fr pounds to 160 pounds in less tcan two minutes.

Under ordinary circumstances the bottom blow-valve is first oper one turn, and the supply of feed-water regulated to keep the wate two inches high in the glass gauge. All salt and mineral substan then carried over in the unconverted water as a strong brine, a ejected through the bottom blow-pipe. Crystals of salt appear the glass gauge, while not the slightest trace of it can be detectec the engine.

On first raising steam it is desirable to let the coil get quite, l fore injecting water. The coil expands under the influence of th and any scale or deposit that may be on it becomes detached. bottom blow-valve be opened wide, and the water then injected, th and dirt are forced overboard, thereby preventing small particle going through the engines and injuring them.

By treating the boiler of the Lightning in this manner no sc deposit was found in the coil of the boiler after having been r four months, and using salt water during all the time it was steam.

Torpedo fittings.

The boat is supplied with two torpedo-spars, designed to be u the broadsides. The heel-fittings are placed well aft on the q of the boat, and the spars and torpedoes are carried on the rail. eased off, the spars swing aft, and the outer ends descend to the depth, 10 feet; the torpedoes then being 20 feet horizontally fro boat's side. The spars are prevented from going too far aft by a f guy.

The spars are eased off from the rail by means of slip-ropes, a be rigged out when going ahead at moderate speed.

When out, the effect of a single spar and torpedo on the steer the boat is comparatively small.

The torpedoes are made to contain 30 pounds dynamite or oth lent explosive, and are to be exploded on contact or at will.

When the explosion takes place the forward guy is carried aw the spar trails aft.

Heel-fittings.—Steel; weight, 130 pounds each.

Torpedo-spars.—Steel; length, 22 feet; exterior diameter, 2 i thickness of steel, $\frac{1}{8}$ inch; displacement, 16 pounds; weight, 34 p (Spars are trussed for 12 feet from outer end.)

Torpedoes.—Steel; spherical in shape; diameter, 12 inches; empty, $11\frac{1}{2}$ pounds; capacity, 30 pounds dynamite; weight, fil pounds; displacement, 38 pounds.

Forward guys.—Wire-rope, $\frac{3}{8}$ inch diameter.

Electric-light machine and lamp.

Machine.—A small-sized Gramme electric machine has been board temporarily. When driven at 2,000 revolutions per minu usual speed) it produces a light equivalent to about 500 candles. proposed to have a more powerful machine, of Farmer's patent for the boat.

Lamp.—The lamp used is one of Farmer's non-automatic lamps, inclosed in a suitable lantern. It is situated on the f deck, just in front of the wheel, and can be worked by the perso steers the boat.

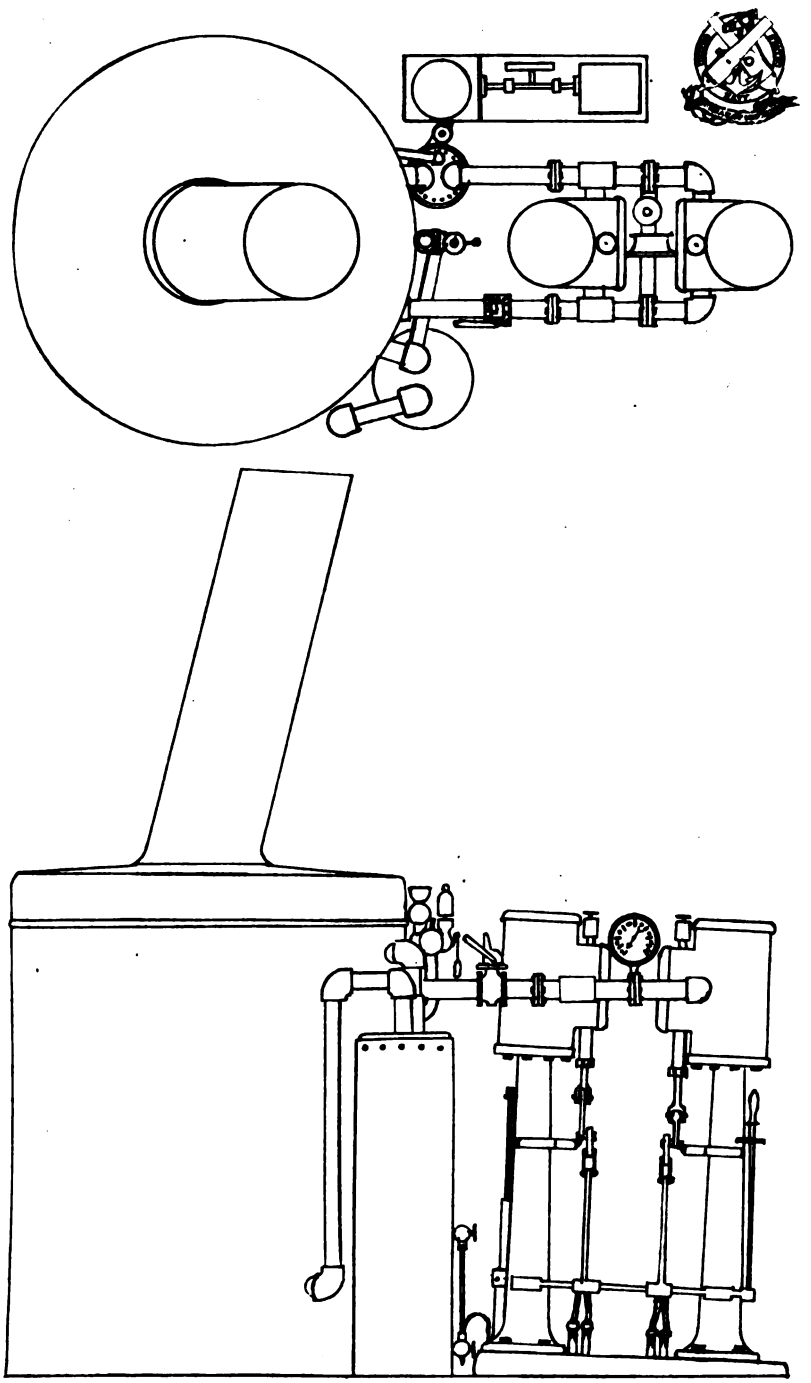

Boiler and Engine of Steam Torpedo Launch "Lightning."

TORPEDO STATION,
Newport, R. I., September 16, 1876.

Description of steam dingy.

Steam dingy, built by the Herreshoff Manufacturing Company of Bristol, for the Bureau of Ordnance, in conformity with the specifications submitted to the bureau on the 19th of January, 1876.

Trial of the boat.

By the terms of the specifications the dingy was to have been submitted for trial on the 1st June. Owing to delay in procuring the shaft the boat was not presented for trial until some time after.

Dimensions.

	By specifications.	By measurement.
Length over all	22 feet.	23 feet.
Greatest beam	4.75 feet.	5.4 feet.
Depth	2.25 feet.	2.8 feet amid., 3.5 feet forward.

Floating capacity.

By the specifications the boat was to have a floating capacity of 1,000 pounds when filled with water. When filled to the rail the boat sustained eight persons whose aggregate weight amounted to 1,130 pounds.

Speed.

Course from buoy south of Goat Island to Goat Island light and return. Distance between buoy and light $\frac{27}{28}$ of a statute mile. Tide, strong ebb; wind, light from northward.

Course.	Distance.	Tide.	Wind.	Steam.	Time.	Average speed.
					m. s.	
Buoy to light	27.28 mile	Against	Against	80 to 140, average 120	7 40	7.55 miles.
Light to buoy	27.28 mile	With	With	130 to 180, average 140	6 10	9.38 miles.

Mean pressure, 130 lbs.; mean speed, 8.46 miles.

Propeller.

Propeller of bronze, 2 blades; diameter, 20″.5. Mean pitch, 30″.

Fuel.

Lackawanna coal, chestnut size, gives very satisfactory results. Mr. Herreshoff states that on the trip from Bristol to Newport, $12\frac{5}{8}$ miles, the consumption was about 48 pounds.

Very respectfully, your obedient servant,

G. A. CONVERSE,
Lieutenant, U. S. N., and Assistant Inspector of Ordnance.

UNITED STATES TORPEDO-STATION,
Newport, R. I., November 25, 1876.

CAPTAIN: I respectfully submit the following report in regard to the torpedo-igniters and fuses which have been manufactured at this station for issue to ships, and also of the progress of the experiments which are being made with a view to improve them.

The present form of copper-case igniter and fuse was approved by the bureau and ordered to be a part of the torpedo-outfit of vessels, in August, 1874. Since then about 4,000 igniters have been made, and upward of 1,000 have been issued to the service. Nearly 2,000 have been used at the station for general torpedo-practice and experimental work.

Of those used at this station, taken from the general store kept on hand, not a single instance has occurred in which a torpedo has failed to explode from a defective fuse; nor have any defective fuses been found among those which have been placed in store for issue.

No failures of the present form of igniters and fuses have been reported from any of the vessels in service; and those returned from ships going out of commission have always been found in perfect order.

As the successful explosion of a torpedo depends on the reliability of the fuse, it would seem advisable that in all cases when an imperfect fuse is found a special report of all the circumstances should be forwarded to this station, in order that defects might be remedied and perfection attained.

A percentage of the fuses which have been in store longest—since June, 1875—was recently examined to ascertain if any deterioration had taken place.

The electrical properties of these fuses were found to be exactly the same as when made.

The gun-cotton priming was in excellent order.

The powder-filling was in good order.

The interior of the copper cases and surface of the wires were found to be coated with a black substance—sulphide of copper. This fine powder was removed, and no perceptible injury to case or wires was discovered. Judging from appearances, the life-time of the igniter would far exceed all requirements.

In view of the defects found in the copper-cased small-arm ammunition formerly issued to the service, the above condition of the igniter-cases was not unexpected. It is thought, however, that the deterioration in the small-arm ammunition was much more rapid than in the igniters, owing to the presence of fulminate in the former.

Coating the interior of the copper case and surface of copper wires with shellac, or similar substance, would probably prevent the action of the sulphur of the powder on the copper.

A quantity of brass cases has recently been received, and it is proposed to substitute them for the copper, to ascertain if they possess any advantages.

For firing the present service torpedo-fuse, a current of electricity having a strength of six-tenths of a weber is required. As galvanic batteries are now frequently supplied to ships for firing torpedoes, it is desirable that the strength of current necessary to fire the fuse should be reduced to a minimum, in order that a small number of cells of battery may be sufficient to do the work.

Experiments have been made with wires of various alloys, in hopes of finding some one which could replace the present platinum-silver to advantage.

Various alloys of gold-iron and palladium-silver have been used, being made into a fine wire, No. 40, 0.0023 of an inch in diameter.

A wire suitable for the bridge of a torpedo-fuse should possess the following requisites, viz:

It should not oxydize when exposed to moisture or sea-air for a long time.

Its specific resistance should be high.

The resistance should be uniform, and should not increase greatly with increase of temperature.

It should have great tensile strength.

Of the alloys tried, gold-iron gives the most satisfactory results. With a bridge of the same dimensions as the present platinum-silver-wire bridge of the service igniter, the strength of current required to fire the priming material is only 0.35 of a weber, or a little more than half that required for the platinum-silver. The tensile strength, however, is not as great, and the bridge is liable to become broken in the process of manufacture, and would not stand the rough usage to which the service igniters are frequently exposed. The proportions of the components of the alloy are being changed, and as soon as the new wire is received the experiments will be resumed.

I am, sir, very respectfully, your obedient servant,

G. A. CONVERSE,
Lieutenant, and Assistant Inspector of Ordnance.

Capt. K. R. BREESE,
Inspector of Ordnance, in charge of Torpedo-Station.

Approved, and respectfully forwarded to the Bureau of Ordnance.

K. R. BREESE,
Captain, U. S. N., Inspector of Ordnance, in charge of Station.

UNITED STATES TORPEDO-STATION,
Newport, R. I., December 1, 1876.

SIR: In obedience to your order, I have the honor to submit the following paper upon the subject of torpedoes:

The present condition of the torpedo for naval purposes may be compared to that of the first reliable guns, very formidable and much dreaded in warfare, yet capable of great improvement.

All of our naval vessels have been supplied with torpedoes and their necessary attachments from this station since 1870, and during that time many improvements have been made. In fact, no one article of the original pattern is now supplied, and many articles have been changed several times, each time an improvement being added. Most of these changes have been brought about by experimental work at this station, under circumstances as near as possible to those of actual service. A few can be traced to experiments and the use of torpedoes by cruising-ships, but, as a rule, experimental knowledge can only be gained by those who are experts, and who have facilities for more extensive practice than are possessed by any cruising-ship with her comparatively small outfit of material. In order to progress, then, in the science of torpedo warfare, or even keep pace with the times, it is necessary to have facilities at this station for conducting a large number of experiments.

Torpedoes for the naval service may be divided into three general classes, viz, spar-torpedoes, towing-torpedoes, and movable or fish

torpedoes. These three kinds will probably be used by the Navy i time of war, and the first two classes are now supplied to all cruisin ships.

Although anchored torpedoes for the defense of harbors are under th control of the Army engineers, a knowledge of them is by no mea neglected here, as naval officers may at any time be called upon operate against them, as well as to use them as auxiliary defensi weapons.

A defense of ships against torpedo attacks of all kinds is also cons ered, but this part of torpedo warfare is at present very imperfec developed, principally from the fact that the offensive qualities of a weapon must first be learned before means of defense can be provid and also from the fact that the most effective means of defense are i vented only during actual warfare. No nation can afford to run the ri of losing a fine vessel of war for the purpose of testing any means defense, and much less a nation pursuing a policy like our own. Thi is an important subject, however, and at present we are obliged to loo to foreign nations for the greater part of our experimental knowledg upon it, the recent experiments of the English upon the hulk Oberon where the two types, spar and towing torpedoes, were represented, eing the most important. These experiments demonstrated that both type were exceedingly destructive.

In order to make the subject of experimental work here still mor clear, a brief outline of some of the most important experiments sin July, 1875, that have taken place is given.

Spar-torpedoes.—It had occurred once to a cruising-vessel that whi a service 100-pounder torpedo was being towed at full speed, the spind of the torpedo, which serves to connect the latter to the spar, had broke It was not fairly decided whether this accident was owing to the pre sure of water on the torpedo-case, or whether the latter had struck son floating debris. After a series of experiments here with the tug Nin and the fast steamer Despatch, it was decided that both the spindle an the socket, the latter lashed to the spar and holding the former, we too weak. Since then stronger ones have been furnished to cruisin ships.

It was thought that the service spar was more frequently broken the explosion of torpedoes than was necessary, and that the question saving it was only one of comparative strength between the spar itse the fastenings of the torpedo to it, and the force of the explosion. Th number of lashings around the socket and spar were reduced, and t proper number to give only sufficient strength for towing purpos determined. Instructions have since been issued detailing the prop number and kind to be used.

Experiments have been tried with a view to prevent the rising of th spar and torpedo, at high rates of speed, by raising the point of contac of the heel of the spar with the ship's side. It was found that a marke effect was produced by raising it but slightly.

The effect of securing the heel of the spar to the ship's side with som elastic material was tried. It seemed to reduce the shock upon the spa at the explosion very materially; but these experiments are incomplet and it is considered important to continue them with a properly co structed buffer.

A series of experiments have been conducted to determine if a to-pedo-spar could not be better supported, thereby checking vibration by attaching the forward guy and topping-lift to it by means of spa

of different construction than had been used. A new method was recommended, which has since been adopted in the service.

Taking advantage of the presence of the United States steamer Despatch, at Newport, it was determined to test the strength of the service spar, that vessel being capable of running at high rates of speed. A service spar was selected indiscriminately out of several, and towed with a service 100-pounder torpedo. The torpedo was fitted with the new and strong spindle and socket, and they showed no signs of weakness. The spar broke at a speed of 10½ knots. It was observed that the speed of the Despatch, when she was running her best, was decreased by the resistance of the spar and torpedo, while towing abeam, from 20 to 25 per cent. This decrease would not have been so great had the vessel been large and had she drawn more water; but it points out the great necessity of decreasing the volume, and particularly the vertical cross-section of the spar and torpedo.

A series of experiments, extending over more than a year's time, have been conducted with a view to perfect an improved torpedo-spar. The principal defects of the present service spar are, want of strength, too great resistance while towing at high rates of speed, and a tendency to come to the surface while towing. Three spars have been constructed, all on the same principle, and made of steel and wood. The first two were broken while testing, but the third has been tried very severely; as for instance, towing in a sea-way when the towing-vessel had both a rolling and a pitching motion. No less than eleven service 100-pounder torpedoes have been exploded from it, some of them in very shoal water, and the spar is apparently as good as ever. Owing to the shape of the spar, the greater the speed the more the tendency to go down, though the topping-lift prevents it from taking anything below the proper immersion. Its resistance is less, as shown by a decreased effect on the helm, and as it needs must be from its decreased cross-section. Its remarkable strength has already been alluded to, the service spars often breaking at the first explosion, and rarely ever withstanding more than two or three. It is thought that this spar can be still further improved, and it is deemed very important that it should be, and then supplied to cruising-ships. Recently two accidents have occurred to prevent the explosion of the torpedo while experimenting with a vessel under way, the spar leading-wire being entirely chafed off. These accidents point to the necessity of protecting this wire, and a tube or pipe for this purpose could easily be introduced into the above spar.

Two patterns of wire-rope compressors, for securing the forward guy of torpedo-spars, so arranged that the forward guy may be suddenly let go, have been tried. One pattern was found to be very convenient for getting the spar out of the way after an explosion, so as not to impede the progress or maneuvering of a vessel. It is very important to so perfect the gear of the torpedo-spar that it may be handled with ease and rapidity and be as much under control as a gun.

Some practical experiments have been tried with voltaic batteries for firing purposes on board ship. An ordinary Leclanchi battery has been kept on board the Nina for one year, and during the whole of that time has proved very efficient for firing purposes, having been used much more than it would be in active service, as well as very frequently tested. During one year's use it has not lost more than 25 per cent. of its power. A similar battery was placed on board of the torpedo-boat Intrepid nearly a year ago, which has also done good service. Voltaic batteries have many advantages for firing purposes; and if some defects can be

eliminated, which bid fair to be, no doubt they will take the place (magneto-electric machines to a large extent.

Signaling with electric bells has been practiced on board the Nin No difficulty has been experienced in so arranging these bells that o person stationed at the torpedo-exploding apparatus could with certain completely control the action of the wheel and engine.

Improved firing-apparatus, applicable either to the use of Farme machines or voltaic batteries, was placed on board of the torpedo-bo Intrepid at this station nearly a year ago. Many of the torpedo arrang ments of this vessel, placed on board at the same time, were differe from those ordinarily furnished, and are fully described in a pamph published by the Bureau of Ordnance. All have been satisfactory to l officers, and have never failed in execution up to the present time. T firing-apparatus is placed in the pilot-house, and it is now regarded all nations as being important to protect the commanding officer a his assistants from the showers of bullets that will be sent from sma arms and Gatling guns when at close quarters. Attention is called this important subject.

A series of experiments has been conducted with dynamite, with view to ascertain how much can be safely exploded from a torped launch. Commencing with fifteen pounds, the amount was increase five pounds at a time up to forty. It was apparent that twenty-fi pounds could be exploded with the present boat-torpedo apparatus, an under the same circumstances, with perfect safety to the boat and wit as little shock, apparently, as caused by seventy-five pounds of powde The only noticeable difference was a more violent recoil of the spa Besides the increased explosive effort of twenty-five pounds of dynami over seventy-five pounds of powder, there is the great advantage of d creased volume and weight.

Attention is called to the subject of torpedo cases. Those now in u are of cast-iron, large and heavy, and varying greatly in strength. am convinced that torpedo-cases are more effectual when capable of wit standing a high internal pressure, no matter what the explosive use and for powder-cases it is almost absolutely essential. It is impossib to have cast-iron vessels with sides as thin as the present torpedo-cas either very strong or of a uniform strength. *The importance of decrea ing the weight and volume of any torpedo of a given destructive effect th is to be forced through the water cannot be overestimated.*

For this reason steel cases are recommended in place of the prese cast-iron ones. They can be made to bear an internal pressure of 5 pounds per square inch without bursting, and if manufactured in lar numbers will be cheaper than the cast-iron ones now furnished. A additional reason for a change is that the present cases were design for a bow-spar, and are not of a suitable shape to be carried on bea spars, as is now universally the case with ships. To increase the fac ity of the carrying vessels for speed and maneuvering by decreasi the volume of the torpedo, no doubt modern powerful explosives w soon take the place of powder.

An improved bow-torpedo apparatus for boats has been successful experimented with, and attention is called to it as being far superior that now supplied to steam-launches of the service.

Two different plans of torpedo-apparatus, designed for a fast torped launch, by means of which *beam*-torpedoes are to be carried, have be perfected. Apparatus according to one plan has been constructed an fitted to the torpedo-launch Lightning, and is now undergoing trial.

Besides what has already been enumerated, there is a large amou

of very valuable knowledge of details acquired in all of the torpedo experiments here, which is given to the service through the officers here under instruction and in printed matter emanating from this station.

TOWING-TORPEDOES.

A long series of experiments with different forms of towing-torpedoes was commenced when the station was first established, and continued until 1873. At that time the Harvey towing-torpedo was adopted for our use in the Navy, and has been supplied to cruising-ships ever since.

The Harvey torpedo is towed upon the surface by a wire rope tow-line, and just before reaching the target to be destroyed this tow-line is slacked, and the torpedo, being heavier than water, dives under it. When in this position, the explosion is effected by means of a mechanical firing-bolt being forced down upon a pin, provided the operator is fortunate enough to bring certain levers of the torpedo into contact with the bottom of the target. This torpedo seems to be objectionable for several reasons, among which are the following:

1. It is exploded by mechanical means, and all torpedoes of this type are too dangerous.

2. It requires great skill and practice to bring it into contact with an enemy's vessel; so much so that, with the average officer, if it is accomplished it will only be done by accident.

3. In the night, when it is claimed that torpedoes will be the most useful, the operator cannot see to dive it.

4. It may be exploded at the surface or with a slight immersion, and do no damage.

5. Its present capacity for powder is too small.

Some experiments have been conducted here with a view to fit the Harvey torpedo with electrical firing-apparatus, resulting in a fair amount of success.

During the summer of 1875, a towing-torpedo, designed by an officer formerly on duty here, was constructed and experimented with. It was more simple than the Harvey, was exploded by electricity, either on contact or at will, and possessed an increased capacity for powder. It required, however, to be dove under the target to be destroyed. The results of the experiments with this torpedo, which are still incomplete, indicated that some changes would be required in it, though the electrical apparatus seemed fairly successful.

Another form of towing-torpedoes, designed to be towed under water with a short scope, and to replace the spar-torpedo, has been tried during the past year. The results of these experiments, still incomplete, have not been very successful.

Taking advantage of the presence of the United States steamer Despatch at Newport, about one year ago, the experiment of towing the service Harvey torpedo at high rates of speed was tried. The result was that with a scope of 50 fathoms of tow-line, at a speed of 10½ knots, the torpedo would not diverge more than 30°. The torpedo seemed to be forced out of water by the resistance of the latter so much that it lost its hold and dropped astern as a flat-bottomed boat goes to leeward. Probably more ballast at this speed would be beneficial, but then it would not tow so well at a lower rate of speed. I will here mention that this same difficulty with the Harvey has been found in other countries, and has been the principal reason of its abandonment in some instances.

There is another form of towing-torpedoes, differing from the Harvey by being buoyant, and having a detachable magazine, which, upon con-

tact of the torpedo with its target, automatically drops to a given deptl and then explodes. Electric towing-torpedoes of this type are in use ii the French and Danish navies, and are towed by a cable with an insu lated copper wire heart. Torpedoes of this pattern were largely exper imented with here previous to 1873, and one model reached a very fai state of perfection. The essential requisites of a good towing-torped are considered to be as follows:

1. If to contain powder, it should have a capacity for 100 pounds.
2. It should be electric.
3. It should have a dropping magazine, dropped upon contact or at will, in order to do away with diving, and to insure an explosion at the proper depth, and at that depth only.
4. It should present as little resistance to towing as possible, and, therefore, should be buoyant and present a small cross-section.
5. It should have considerable keel-surface, in order that it may diverge at all speeds.
6. To do away with buoys and to increase its facility for towing, it should be long.

There is no difficulty in constructing a towing-torpedo that will fulfill the above conditions, provided the means can be obtained.

The necessity for improving the service towing-torpedo is very apparent. The prevailing idea afloat is that it is too dangerous to handle except in times of emergency, and therefore officers will have nothing to do with it.

MOVABLE TORPEDOES.

The Ericsson movable torpedo was extensively experimented with at this station during the summer and fall of 1875, the experiments being under the supervision of the inventor's agent, though witnessed by an officer of the station. Although this torpedo had been experimented with during the summer of 1874, from the United States torpedo-vessel Intrepid, yet little was known about it here except that the torpedo was not successfully steered. During the experiments at this station, a full knowledge of the mechanism of the torpedo was gained. The torpedo was also so modified as to be perfectly under control, and was sent about under water at will. The experiments with this torpedo required the presence of a steam-vessel, in which was placed the necessary machinery, as well as about fifteen men. During the past summer this torpedo has been on exhibition at the Centennial.

The second movable torpedo, manufactured by Mr. Lay, was purchased by the Government in 1872, and delivered early in 1873. Experiments were commenced with it very soon afterward. The torpedo was run but once, however, by the officers of the station, and was not then under control, when the gas-making apparatus for supplying the motive-power broke down. New and greatly improved gas-making apparatus was then constructed, after plans designed at the station, though it was not completed until the early part of 1874. Experiments with the Lay boat were again commenced in the spring of 1874, but the first time gas was made one of the boat-flasks burst, which led to the condemnation of them all, and new and improved ones had to be made. Makers of vessels comparatively light, that will bear a pressure of 2,000 pounds per square inch, are not common in this country, and the flasks were not ready until the early part of 1875. Much valuable experience, however, was gained by reason of the above accidents. Experiments were once more commenced on the boat in July, 1875. Owing to the fact that nothing was known at this station concerning

the practical working of the boat, and that new material had been placed in it, a long series of experiments, continued throughout the summer and fall, accompanied with a great deal of patient labor under many disadvantages, was necessary in order to reach satisfactory results. Finally the boat was placed in a condition to work perfectly, and its manipulation was equal to that of the inventor himself. In the opinion of the writer, however, the mechanism of this boat or torpedo, in its present condition, is too delicate to be of any practical use. Plans for its modification, which it is believed will render it not only practicable, but superior in speed and in other ways, have been prepared and submitted. I regret that I have not had time to submit some plans that I have in my mind, which would, I think, be a valuable addition to those already submitted. Beyond a question, the Lay torpedo-boat can be highly perfected at this station if the means are allowed. This torpedo-boat has been on exhibition at the Centennial during the past summer.

In October, 1875, the fourth torpedo-boat, manufactured by Mr. Lay, was brought to this station for trial, having been contracted for by the Government. After a series of six trials, this torpedo was removed from this station to Washington, for further trials, and has not since been returned. The result of these six trials, and a description of this more perfected weapon, have been placed upon the records of the station. This second torpedo is a great improvement upon the first received here.

The station movable torpedo, with compressed air as motive power, has not been experimented with recently. Plans for an improved torpedo of this type were prepared by an officer on duty here two years ago, but nothing has been done toward manufacturing a trial weapon.

Suitable apparatus for the trial of submarine rockets and projectiles is now at this station. If successful weapons of this kind can be produced, they will in a great measure take the place of torpedoes in marine warfare. Plans for constructing weapons of this nature are on hand that appear feasible, and that offer a reasonable probability of a successful solution of the subject. This is regarded as an important field for experiment.

It will be observed that most of the experiments described required, and all similar ones in the future will require, the presence of a vessel of some sort at this station. The tug Nina has been here for that purpose since the station was established until last September, when, owing to a reduction of the *personnel* of the Navy, her crew were discharged and the vessel was transferred to the New York navy-yard.

The station has greatly increased its usefulness to the Navy during the last three years by entering into new spheres of action and developing facts of a nature hitherto untouched. Were it not well advanced in many points of scientific research it would not receive the high encomiums which it does from learned men, at home and abroad.

To progress as in the past, and in a way that would seem best from *every* point of view, a more liberal allowance of officers, labor, and means than at present exist will be required. England does not hesitate to expend upon one experimental gun more than three times the entire appropriation for this station during the present fiscal year.

I am, sir, very respectfully, your obedient servant,

R. B. BRADFORD,

Lieutenant and Assistant Inspector Ordnance, U. S. N.

Capt. K. R. BREESE, U. S. N.,

Inspector Ordnance, in charge Torpedo Station.

UNITED STATES TORPEDO STATION,
Newport, R. I., November 21, 1876.

SIR: Within the last year the following electric unions for makin temporary splices in electric cables have been tried, viz:

The one hitherto issued from the station, and known as "station pa tern," consisting of a brass tube, an inner glass, a rubber gland at eac end of the glass tube, and a screw-cap at each end.

One designed by Lieutenant Bradford, consisting of a brass tube line with gutta-percha, a rubber gland at each end, and a screw-cap at eac end.

One designed by Mr. Wilks, consisting of a gutta-percha inner tub a brass outer tube in two sections, screwing together in the middle, an two rubber glands.

Rubber tubing having a foundation of canvas.

Tarred canvas, served.

Greased canvas, served.

In the accompanying table will be found the results of some of th measurements taken.

For purpose of testing, splices were made in the service cable, usin the different unions to cover the splice. The cables containing th splices were then immersed in sea-water at end of ferry-wharf; one en of each was connected to a wire leading to electricity building for meas urement.

At the conclusion of the trials it was considered that the rubber tubing was the most satisfactory of those tried. The results obtained from it were uniformly good, which cannot be said of any of the others; it can be procured anywhere, is cheap, and can be applied readily by any one.

The one designed by Mr. Wilks gave very poor results in one trial and very good results in a second; one difficulty with his union is that like all other rigid unions, it is apt to break the insulation just at the end of the union, if there is any motion, as in a tide-way. A further ob jection is that the rubber glands must take fair, which, as you cannot see them, is difficult to insure. If screwed up too tight the insulatio will give way; if not screwed up tight enough they will leak.

The tarred or greased canvas might be safely used a few days i necessary.

Very respectfully,

A. R. COUDEN,
Lieutenant and Assistant Inspector Ordnance.

Prof. M. G. FARMER,
Electrician.

Capt. K. R. BREESE:

I herewith submit the above report of Lieutenant Couden, merel adding that a cursory inspection of the tables appears to show grea want of uniformity in the results. This is of small account, for th poorest of the unions are good enough, since Farmer's A machine read ily fires a torpedo through 200 feet of uninsulated wires in sea-water.

Respectfully submitted.

M. G. FARMER,
Electrician.

When put down.	Date of measure.	Rubber tubing.			Bradford's.			Wilks's.			Station.			Greased canvas.			Tarred canvas.		
		Splices.	Cable.	Resistance.	Splices.	Cable.	Resistance.	Splices.	Cable.	Resistance.	Splices.	Cable.	Resistance.	Splices.	Cable.	Resistance.	Splices.	Cable.	Resistance.
Nov. 11, 1875	Nov. 11, 1875	....	.....	.....	5	Siemens'	460	5	Siemens'	390	....	.....	.....	....	.....	.....	....	.....	.....
Nov. 11, 1875	Dec. 1, 1875	....	.....	.....	5	....do ...	310	5	....do ...	400	....	.....	.....	....	.....	.....	....	.....	.....
	Dec. 31, 1875	....	.....	.....	5	....do ...	150	5	....do ...	310	....	.....	.....	....	.....	.....	....	.....	.....
Jan. 17, 1876	Jan. 17, 1876	4	Siemens'	234, 000	4	....do ...	1, 800	....	....do ...	.....	4	Siemens'	468	....	.....	.....	....	.....	.....
	Jan. 21, 1876	4	....do ...	49, 000	4	....do ...	410	....	....do ...	.....	4	....do ...	340	....	.....	.....	....	.....	.....
	Feb. 7, 1876	4	....do ...	5, 825	4	....do ...	270	....	....do ...	.....	4	....do ...	295	....	.....	.....	....	.....	.....
	Feb. 17, 1876	4	....do ...	7, 850	4	....do ...	565	....	....do ...	.....	4	....do ...	665	....	.....	.....	....	.....	.....
Mar. 1, 1876	Mar. 1, 1876	4	....do ...	30, 900	4	....do ...	10, 345	4	....do ...	30, 700	4	....do ...	1, 810	4	Siemens'	101, 000	4	Siemens'	990, 000
	Mar. 4, 1876	4	....do ...	24, 000	4	....do ...	2, 062	4	....do ...	9, 240	4	....do ...	1, 222	4	....do ...	15, 500	4	....do ...	73, 500
	Mar. 9, 1876	4	....do ...	7, 469	4	....do ...	3, 080	4	....do ...	9, 581	4	....do ...	2, 394	4	....do ...	3, 481	4	....do ...	5, 335
	Apr. 7, 1876	4	....do ...	6, 200	4	....do ...	1, 450	4	....do ...	8, 850	4	....do ...	1, 100	4	....do ...	1, 100	4	....do ...	1, 000
	May 4, 1876	4	....do ...	6, 875	4	....do ...	1, 080	4	....do ...	13, 400	4	....do ...	977	4	....do ...	802	4	....do ...	952

TORPEDO STATION,
Newport, R. I., November 23, 1876.

SIR: In addition to the ordinary course of the work of class-instruction during the past year, special attention has been paid to the improvement of the service-igniter, and to the service-union, or cable-joint. Some six or seven miles of subterranean wires were laid down in the summer and autumn of 1875, connecting various points on this island with the electrical laboratory. Most of this wire was insulated with Day's kerite, and a part of it was still further protected by a covering of lead pipe, in accordance with the plan of Professor Hill.

Some twenty-eight gutta-percha-covered wires were also laid from the electrical laboratory to the saluting and testing ground. These wires were laid in trenches to the depth of about twelve or fifteen inches only, one object being to ascertain from experience if this depth would be sufficient for ordinary protection. Thus far it seems to be, though where the wires are buried beneath the cart-path a greater depth would be desirable.

The gutta-percha-covered wires are a portion of a 7-wire cable that had previously been used for a year for the purpose of establishing communication between this station and Rose Island; having been broken by an anchor, it was taken up and portions of it used as above referred to.

The insulation of these wires, while not so high as would be requisite in a long ocean cable, is still more than ample for torpedo purposes.

Igniters.—No service-igniter which has been issued during the last two years has yet been reported as defective.

It might be well if orders were issued to report to this station any case of failure, and the reasons therefor, of either service-igniter or service-fuse. No copper-cased igniters issued during the last year and a half have as yet been reported as having failed. All those which have been returned from cruises, and have been examined, have proved to be in good condition.

Satisfactory experiments are in progress to substitute a brass for the copper case. The bridge-wire ordinarily used for the igniter is $\frac{3}{16}$ of an inch in length and about $\frac{1}{500}$ of an inch in diameter, and is formed from an alloy of two parts silver with one part platinum.

Gold-iron wire.—Some experiments have been made with an alloy consisting of ninety-five parts of gold with five parts of iron, for use as a bridge-wire. The relative resistance of the gold-iron wire is greater than that of the platinum-silver, and a less strength of current is required for ignition with the gold-iron than with the platinum-silver in wires of the same diameter.

Batteries.—Various forms of galvanic battery have been and still are undergoing tests, to determine their relative merits on ship and shore. The results of these investigations are shown in the accompanying report, drawn up by Lieut. A. R. Couden, assisted by Ensign A. L. Case, jr.

Measurement of batteries.—The question is often asked, what is the best method of determining the electrical dimensions of a battery? In reply, it may be stated that much depends upon the nature and character of the battery to be measured, something also upon the kind of apparatus at hand to effect the measurements with. Supposing you have on hand "Farmer's Gaugain tangent galvanometer," some form of rheostat will also be needed, and then what is known as the shunt method will give the best results in the case of constant batteries. A pair of condensers and a mirror galvanometer will serve best in the case of inconstant batteries.

Suppose that we would measure the internal resistance of a gravity-battery: introduce into its circuit a fine-wire galvanometer and a box of resistance-coil; denote by the letter B the resistance of the battery and leading wires, and by the letter R the resistance of the galvanometer and rheostat; if E denote the electric motive force of the battery, and S the strength of the current resulting, then from Ohm's law we have $S = \frac{E}{B+R}$ for the first experiment; S is also $= a \tan. \theta$, where θ denotes the deflection of the needle in degrees, and a is the strength of current when the needle points to 45°. For our second experiment, we will shorten the external resistance R of the circuit to R′; this will make the needle diverge beyond 45°, so we will apply a branch circuit or shunt, of resistance S, across the poles of the battery, and make this shunt such that the needle returns to the same deflection as in the former experiment; we shall find that the resistance of the battery B may be expressed by this equation, $B = \frac{R-R'}{R'} \times S$; or, in other words, if R be twice as great as R′, then will the battery resistance B be equal to the resistance S of the shunt.

Inconstant batteries.—In the case of batteries of this class, the best method is to use two condensers of capacities, C and C′; also a mirror galvanometer. We proceed as follows: Charge the condenser C with the full power of the battery, and note the deflection, d; this is the first experiment. Second. Apply a shunt of resistance, S, to the battery, and, while so applied, charge with it the condenser C′, and vary the value of the shunt S until the same deflection d is obtained as in the first experiment; then

$$B = \frac{C - C'}{C'} \times S,$$

a result like that obtained with the tangent galvanometer. The contact of the shunt need be but momentary, so that neither E nor B will have opportunity to vary much. Experiments on forty cells of gravity battery, with these two methods in comparison, give resulting values of B that do not differ from the mean so much as 2 per cent.

Electro-motive force.—In order to determine this element in volts, it is needful to have a tangent galvanometer of which the value, a, is known. One of the Farmer instruments in use at this station has .015 for the value of a at this station; hence, if the value of B + R be so chosen that the product $(B + R) \times a = 1$, the value of E will correspond or be equal to the tangent of the angle of deflection θ. This constitutes a rapid method of working, and many of the values in Lieut. A. R. Couden's table were thus determined.

The best angle for experiments of this class is about 42°, (42° 21′,) as at this angle the sum of the errors of reading and the tabular tangents is a minimum.

The experiments detailed in Lieut. A. R. Couden's table show that the station battery is uniform in its action, enduring in its character, and is competent for sustaining currents of the strength needful for electric light; also for firing purposes for any reasonable length of time. I may mention that forty cells of it were set up on the 13th of July, have been used for electric light as much as four or five hours, have been occasionally used nearly every day a little, and are now (November 22) ready and sufficient for use as a firing battery. A little water has been added to supply the loss from evaporation, but no chemicals have been added since it was first set up.

Gravity battery.—This is uniform and certain in its actic times ready to give a steady current, but is hardly as economi station battery on a closed circuit, when much current is requi

Waffle battery.—This is a gravity battery, and much resen Tray battery of Sir William Thompson. It has been used fo year, and more for the purpose of supplying currents to "Conv cators" which keep watch of the circuit-closers. Its performa tirely satisfactory.

Lechanché battery.—Various forms of these have been under with satisfactory results. The later form of solid electrode well.

Converse kerite-covered zinc cup.—This modification is design nish a battery which shall be compact and durable, able to all the rough usage and abuse that may be expected on shipb yet be ever ready to give forth its current.

Using the solid form of Leclanché electrode, inclosed in bur and having a flexible cover, as now used, nothing seems need added to it to make it the most serviceable for ship use, either or firing battery.

Table of cost.—The subjoined table shows the theoretical cons in grains per diem of twenty-four hours, in each cell, due to of one veber strength flowing through it, of each of the follo stances, being those commercially occurring in trade, and su generally used in batteries:

Commercial sulphuric acid 66° B	
Commercial nitric acid 54° B	
Crystals of sulphate of copper	
Pure distilled zinc	
Peroxide of manganese	
Bichromate of potash	
Pure copper	

Using this table it is easy to calculate the cost of running a g rent, with any of the cells above mentioned, when the price p of the materials becomes known.

It is found that owing to local action the actual consumptio is greater than the theoretical; much more so when nitric acid i the porous cup, as in the Bunsen or Grove batteries.

Likewise the actual consumption of sulphuric acid is greater theoretical.

The consumption of the sulphate of copper agrees in prac well with the theoretical demand, and so does the deposition c in the Daniell or gravity battery.

So, too, the theoretical and practical consumption of bichr potash agrees very well in the station battery, where it is simpl regulate the nitrous acid.

The production of a given amount of energy, whether for the of electric light or for other purposes, where the current is seems to be more economical with the station than with the battery.

In both, the largest portion of the zinc waste arises from the of zinc rejected; especially is this true on continually closed ci

The terminal insulation of the underground wires is more th for torpedo purposes, but the office switch-board shows defecti tion resulting from the mode of its construction. I can but ho soon be replaced by one which shall better comport with the cellent apparatus of the station.

Siemens's cable.—The copper-covered cables used to connect the circuit closers and buoys in the harbor to the indicators on shore have given good satisfaction.

Circuit-indicator.—Ten of Converse's circuit-indicators have for some six months past been connected with as many circuit closers and buoys, and the performance of these instruments has equaled the most sanguine expectations with regard to them.

Buoy carried away in a storm.—A severe storm occurred in March last, during which one of the buoys and circuit-closers was driven from its moorings, rupturing the cable which connected it to the shore, thus affording a practical demonstration of the value of the indicator, as the accident was immediately signaled automatically to the office, thus enabling the buoy to be recovered before it had drifted out to sea.

At another time the propeller of the launch got foul of one of the cables, and this, too, immediately caused the ringing of the signal-bell at the office.

DYNAMO-ELECTRIC MACHINES.

During the past year an investigation has been commenced, having for its object to determine the relative merits of several of the most noted magneto or dynamo electric machines now before the public, and their applicability to the purpose of producing electric light.

Also, an inquiry has been instituted into the cost of the electric light, whether developed by a galvanic battery or by a magneto-electric machine. This inquiry is not yet concluded, and but few of the results are ready for use.

Among the magneto-electric machines experimented on are the Gramme, the Wilde, the Farmer, and the Heffner alternate, as built by the Messrs. Siemens Brothers, of London.

Gramme machine.—The machine used at this station is a small one, having only about eight or nine pounds of wire on the armature, which is divided into two circuits. To each of these circuits is attached a separate commutator of 50 divisions. (A large one of 8,000 candle-power recently obtained.)

The resistance of each armature-circuit is little more than 0.3 of an ohm.

The field of force has about thirty-five pounds of wire used in its construction, disposed in four bobbins.

The aggregate resistance of the field-of-force bobbins amounts to 1.317 ohms; hence the total resistance of the machine when connected in series amounts to little more than 1.9 ohms.

It is arranged to run at a speed of about 1,800 revolutions per minute, ordinarily, and when running at this speed will give a light varying from 275 to 425 candles. The intensity of the light falls off somewhat after running an hour or more, owing to the heat developed in the armature. This is true of all such machines.

The power required to drive this machine at this velocity and with a short electric arc is somewhat less than 1 horse-power. The machine is well-made and durable—has wanted no repairs as yet. It has occasionally been driven for a short time at a much higher speed, say 2,500 or 3,000 revolutions per minute; but the heating of the coils is so great that it does not seem advisable to run it continuously faster than 1,500 revolutions per minute. At this rate it has been run continuously for as long a time as three hours, and might have been run twice as long with safety. Almost no spark appears at the commutators.

The Wilde machine.—This is a to-and-fro-current machine, very like the machine of Hjorth with the permanent magnets omitted, but having

two armature-circuits, one with current uniform in direction for t purpose of maintaining the magnetism of the field, the other circ being used for the production of electric light. The current from tl armature-circuit is a to-and-fro current, and of course requires no co mutator, and thus avoids the spark that would occur in a Hjor machine.

About 360 pounds of wire are used in the construction of this machi and when run at the normal velocity of 600 revolutions per minute will afford from the accompanying lamp from 3,500 to 3,600 candle-ligh There are twice twelve armature-cores in this machine, and a like nu ber of cores and bobbins forming the field of force.

The machine is inclosed in a neat wooden covering, is built subst tially, and is durable.

When run continuously for some hours on a very short circuit, armature and its cores get quite uncomfortably warm, owing to the ra reversals of the magnetism of the armature-cores, (about 7,000 times minute.)

An interesting experiment is often performed with this machine. T coils of No. 12 copper wire, each coil about 3 inches diameter and abo 5 inches long, are included in the lighting-circuit of this machine. In the hollow of one of these bobbins is thrust a bar of brass, about inches long and 1¼ inches diameter. A hole drilled into the top of th bar contains, say, one-fifth of a cubic inch of water.

A similar bar of soft iron is inserted into the other coil or bobbin, ar its cavity is likewise filled with water. The machine is now put i motion. In about five minutes the iron bar becomes uncomfortab hot, but the brass bar remains tolerably cool, or at least does not g very warm. On the contrary, the iron bar grows warmer, evaporat the water in it, and soon is hot enough to blacken wood if held in co tact with it. All this time the coil which incloses the iron bar can l held in the hand with impunity, but the iron meanwhile is too hot to l touched with impunity. A musical note is heard produced by tl reversals of the magnetism of this bar.

Something over 6 horse-power appears needful to maintain the vel ity of 600 revolutions per minute when the resistance exterior to tl lighting-circuit is very small.

The resistance of this armature-circuit is .074 ohm, while that of tl other and smaller circuit that maintains the field is about .45 ohm that of the field being 2.83 ohms. This machine appears to be ve durable, and thus far has called for no repairs except the damages th occurred during transportation, which were slight.

Farmer's Dynamo.—Several of these machines have been undergoi experiment at this station within the last two years.

The first was a combination of eight of pattern A, such as are us for firing torpedoes. They were geared to run together at a speed about 1,500 revolutions per minute, and were capable of affording much as 5,000 candle-lights, but the internal heating was too great f long-continued service. Next was tried a single machine of pattern This had facilities for cooling by means of a stream of running wat and at 2,000 revolutions per minute would afford as much as 2,000 c dle-lights.

About 200 pounds of wire were used in the construction of this m chine.

An 8-inch machine of pattern F F has been used successfully, a gives good satisfaction. About 175 pounds of wire is used in its co struction. It has four bobbins forming the field of force. The armat

has twice 25 cores. There are two commutators, having 75 divisions each. The total resistance of the machine, as usually coupled and run, is not far from 4 ohms, and at a speed of 800 revolutions per minute it produces an electro-motive force of about 120 volts in an external resistance of 3 to 4 ohms. This machine will yield as much 2,500 candle-lights at a speed from 700 to 800 revolutions per minute, and does not require more than 3.75 to 4 horse-power to maintain this service. Almost no spark is seen at the commutators, and no repairs have yet been required. Machines of this description are now manufactured by the Messrs. Wallace & Sons, of Connecticut.

Siemens's machine.—One of these machines, known as the Heffner alternate machine, has been supplied to this station, and many experiments have been tried with it. Its performance is very satisfactory. It is the largest and most powerful machine now in use at this station. The armature contains between 95 and 100 pounds of wire, and the 4 field bobbins contain in the aggregate some 360 pounds more. This machine is adapted to the production of a powerful current in a small external resistance, say as much as 50 to 100 vebers. Often as much as 40 to 50 vebers is developed during the continuanc of a short electric arc, and the amount of light often exceeds 5,000 C. L. It is said to be capable of producing so much as 14,000 C. L. at a speed sufficiently rapid, but the internal heating would be too great for safety. At the normal velocity of 370 to 380 revolutions per minute, it readily yields from 3,500 to 4,500 C. L. if the external resistance of leading wires be small. This machine is well and strongly built, is not liable to get out of order, except at the commutator. The commutator brushes need occasional re-adjustment, in order to keep down the spark, which is only trivial for a current of such strength. Theoretically, we should expect this machine to give the largest duty of any of the group here described. I expect to be able to determine this point when the experiments now in progress shall have advanced far enough and shall have been properly discussed.

Electric lamps.—With the Wilde machine came a new automatic lamp, with reflector and stand. This lamp is simple in its construction and is well made. A right and left handed screw, each of same pitch, are used to move the carbon points to and from each other. The working of the lamp is simple and satisfactory. By means of the reflector and stand a very fair beam can be directed upon any object within its range.

Siemens' lamp.—With the Siemens' machine came a very ingenious automatic lamp, having with it a catadioptric apparatus, consisting of a small reflector behind the light, and a Fresnel lens in front of the lantern. This lens is near 20 inches in diameter and is of excellent construction. In the base of the lamp is a powerful electro-magnet, which, with its armature circuit-breaker and adjusting apparatus, serves to separate the carbons to proper distance for the production of the electric arc. The carbons tend to run together, from the effects of gravity upon the upper carbon holder, but they are restrained through the action of the armature of this electric magnet until, as the carbons burn away, the current weakens so far as to allow the train of wheel-work to start, when the carbons approach until the current is again of its normal strength. The construction of this lamp adapts it to currents of the strength of from 40 to 70 vebers, but it is hardly delicate enough for currents so low as 8 or 10 vebers, and indeed was not intended for such.

To and fro currents.—Another peculiarity of this lamp is a contrivance such that by turning a button in one direction it can be worked by the to-and-fro current from the Wilde machine. While by turning this button

in the opposite direction, it is adapted to work with a current uniform in direction. The mechanism by which this is done is simple, but, as here constructed, it once in a while gets out of order.

The rapid vibratory motion of the heavy armatures tends to produce some considerable wear in the mechanism.

FARMER'S AUTOMATIC LAMP.

This lamp differs from others in the employment of a regulator or relay to operate the mechanism through the intervention of local or branch circuits. This relay consists of an axis-bar suspended from a delicately-poised lever in such a manner that the bar is just within a coil of wire, through which the whole or a portion of the main current passes. The action of the current when too strong tips the bar in one direction, and when the current is too weak a retractile spring tips the bar in an opposite direction.

A train of wheel-work, driven by a spring, tends to cause the carbons to approach each other. The motion of this train of wheel-work is arrested by the armature of a small electric magnet, which magnet is a branch circuit or shunt to the coil first spoken of.

The tilting-bar of the lever of the regulator closes the local current on this releasing-magnet whenever the current is of proper strength, but as soon as the current weakens by the burning away of the points, the retractile spring of the regulator causes the lever to open the branch circuit of the releasing-magnet, and so its armature permits the train to move and approach the carbons until the main current again becomes of such strength that the regulator closes the branch circuit of the detaining magnet, and thus stops the motion of the train.

Should the points run into actual contact, after the arc is broken and again restored, a third electro-magnet, also in the main circuit, withdraws the lower carbon from contact with the upper, and holds it in this position until the arc is again broken.

The movement of the carbon-holder is caused by the action of two screws, so geared together that one pencil shall advance twice as rapidly as the other.

Conveniences are attached to each carbon pencil-holder, so that they can be disengaged from the screws and moved to any required position independently at pleasure. The holders also admit of separate adjustments on a vertical axis, whereby the two carbons can be placed over each other.

The spring needs rewinding no oftener than new carbons are supplied.

The performance of this lamp is entirely satisfactory. It has been run for three hours continuously, and was then stopped as the engine stopped at noon. No reason exists why it should not run continuously until the pencils are consumed, provided it be properly adjusted at first, and supposing the magneto-electric machine to run with ordinary regularity.

COST OF LIGHT.

Where a large amount of light, say from 5,000 to 10,000 candle-light, is required, it can be produced from a suitable machine of any one of these constructions at the rate of 1,000 candle-light per horse-power; but smaller amounts, say 200 to 300 candle-light, are relatively more expensive, say about one-half horse-power for 200 to 250 candle-light.

This is much more economical than when produced from any of the

ordinary forms of galvanic battery. One horse-power may be reckoned as costing from $0.02 to $0 06 per hour, which would give the cost of 10,000 candle-light as $0.60 per hour, simply for power. Of course some other items, such as oil, attendance, interest, and depreciation, also cost of carbons consumed, would increase this amount somewhat, but even at twice or three times this cost, it is even then much less expensive than gas-light at 3 candle-light per cubic foot per hour, at a cost of $2.50 per thousand for gas.

INCANDESCENT PLATINUM.

When either platinum or iridium are rendered incandescent by the passage of an electric current through bars or wires made of either metal, a mild and pleasant light is emitted, much less contracted and glaring than the light obtained from carbon pencils; with this advantage, no vitiation of the atmosphere occurs, and the amount of light at any one point can be made as small as may be desired.

Platinum affords about 100 candle-light per square inch of incandescent surface when within 220° of the point of fusion, and a bar or wire of it can be maintained at this temperature for any length of time by means of Farmer's automatic regulator, controlling a suitable current.

IRIDIUM,

From its higher melting-point, yields more light per square inch of ignited surface, and can also be readily maintained at any desired temperature below the point of fusion by means of the apparatus above mentioned.

ELECTRIC SIGNALING.

Two different classes of experiments were made in this department The first class of experiments relate to the use of incandescent platinum bars as the source of light. Three bars or strips of platinum, each bar being about 2 inches long, $\frac{3}{8}$ of an inch wide, and $\frac{1}{300}$ of an inch in thickness, were arranged vertically over one another at suitable distances, say 10 feet apart.

Three resistance coils, and three continuity-preserving keys, were provided, and so arranged that pressing key No. 1 only the upper light was shown, pressing key No. 2 both the upper and middle one were exhibited, next pressing key No. 3 all three lights were shown. Thus one light should signify figure No. 1, two lights figure 2, and by combinations of these any set of signals could be produced. All three lights shown simultaneously served to denote a pause or end of word or sentence. This method can be manipulated quite rapidly.

The use of the resistance coils was to preserve the resistance of the circuit nearly uniform, the keys serving simply to substitute in the circuit the dark coil for the incandescent bar.

SECOND METHOD.

In this second plan the carbon-point lamp was surrounded with a lantern having a sort of venetian-blind arrangement, which could be opened or closed at pleasure. This was operated by hand; opening it for a second or two disclosed the light, while shutting the blind concealed it from view. By the use of this arrangement signals could be executed rapidly and with precision, and no difficulty was experienced in inter-

preting and recording them at a distance of eight miles, nor w have been experienced at much greater distances had op offered, in fact they were distinctly seen at the distance of twel

These experiments were considered entirely successful and tory by the Chief Signal-Officer, Commodore F. A. Parker.

I approved a report by Lieut. A. R. Couden on the tests mad various unions or splices. Likewise a tabular account of som battery measurements that have been made during the yea four different methods of measuring were the principal ones us

No. 1 is as follows:

$S = A \tan \theta^1_2 = \frac{E}{B + R}$, where B is so small that it may be r in comparison with R, hence $E' = R \times A \tan \theta^1_2$ approximately

2d. R is removed from the circuit entirely, and we have S' $\theta_2 = \frac{E}{B}$ and we get $B = \frac{E}{S'}$

$B' = \frac{R \times A \tan \theta^1_2}{A : \tan \theta_2}$. Results from this method are not as co from the shunt method No. 3.

Method No. 2 is as follows:

$$S = \frac{E}{B'}, S' = \frac{E}{B + R}, \text{ hence } B = \frac{R \times S'}{S - S'}.$$

Method No. 3 is the shunt method explained when speaking ods of battery measurement.

Method No. 4 is practiced as follows:

So adjust R that $(B + R) \times a = 1$, then $S = \tan \theta$ and $E =$ $\times a \times \tan \theta$. Next arrange a shunt around the galvanometer the tangent of the angle of deflection shall express the strengt current S' flowing through the battery when the resistance moved, then $B = \frac{E}{S'}$.

This latter method is not as accurate as No. 3, but repeated imate measures can be made by it with rapidity.

Various other matters of more or less interest have bee mented upon, but are here omitted for want of time to pro pare them.

I would here take occasion to mention the fidelity with whic G. A. Converse and A. R. Couden, also Ensign A. L. Case, jr., sisted me in these labors. I would also call attention to orderly arrangement of the battery-room, due to the thought Lieut. G. A. Converse, and would not neglect to mention the manner in which the batteries are kept by Mr. Brooks.

Respectfully submitted by

MOSES G. FARN
Elec

Capt. K. R. BREESE, U. S. N.,
Inspector of Ordnance, in charge of Station.

TORPEDO STATION, NEWPORT, R. I.,
November 25, 1876.

SIR: In pursuance of your instructions, I respectfully submit the following statement. In it I have given an outline of the kind of work performed in the chemical department of this station.

The work of the chemist at a station like this is sufficiently varied, as, besides his special and peculiar duties, he naturally enters into much work and experiment of a general nature. In this sketch mention is made only of the strictly chemical work of the station. Such work is of course but a department of the main subject, and in the development of the latter has its place and part.

In the limits of an outline like this, it will not be possible to do more than indicate in general terms the directions in which work has been carried on, some of the results obtained, and some of the objects which are to be accomplished, not attempting to fully discuss matters so filled with multiplicity of detail.

During the time that I have performed the duties of chemist at this station, (since October 16, 1869,) in my particular work, I have had the assistance of Mr. T. M. Chatard, (assistant chemist January 4, 1871, to August 30, 1872,) Lieut. H. C. Wisner, United States Navy, (May 1, 1871, to January 11, 1872,) Lieut. F. M. Barber, United States Navy, (January 11, 1872, to October 15, 1874,) Dr. Geo. B. Peck, (assistant chemist August 24, 1872, to April 30, 1874,) Lieut. E. Longnecker, United States Navy, (September 2, 1873, to November 27, 1873,) and Mr. C. A. Pitkin, assistant chemist June 15, 1874, to June 30, 1876,) and I desire to acknowledge the energy and ability displayed by these gentlemen in the duties of this department. Especially to Lieutenant Barber and Mr. Pitkin, who were the longest in this work, much credit is due.

EXPLOSIVES.

The principal part of the work of the chemical department of this station is in connection with the experimental manufacture and use of explosive bodies. All explosive substances used or experimented with, excepting gunpowder, are placed in this department, and the care and handling of them requires much time and labor.

For torpedo purposes, a more violent explosive than gunpowder is demanded. Nitro-glycerine and gun-cotton are the substances generally employed for such uses. Nitro-glycerine possesses great explosive power; and the readiness with which it may be prepared makes it easily obtainable, comparatively speaking. The experiments with nitro-glycerine at the station have been more numerous than with any other violent explosive.

NITRO-GLYCERINE AND ITS PREPARATIONS.

In the fall of 1870, two small rough buildings were constructed for making nitric acid and nitro-glycerine, but they were not fully ready for use until the summer of 1871. From that time to the end of 1875 there have been made here about 4,000 pounds of nitro-glycerine. Work of this kind is usually done only in the summer and fall. The nitro-glycerine made is used at the station for experiment, either in the liquid state or in the form of various preparations or mixtures.

The method used for making nitro-glycerine is that employed by George M. Mowbray, at the Hoosac Tunnel Nitro-Glycerine Works, at North Adams, Mass., and consists essentially of the slow addition of glycerine to a mixture of strong sulphuric and nitric acids contained in

earthenware pitchers standing in ice-water, and during this addition, the acid mixture in each pitcher is agitated by a powerful stream of cold air. After this action is completed the pitchers are emptied into a large vat of water, where the acid is diluted and the nitro-glycerine precipitated to the bottom. The diluted acid is drained off from above the nitro-glycerine and the latter removed for final washing.

This method is, I think, in many respects preferable to any other in use. If the proper materials are employed and the requisite care taken, nitro-glycerine can be made by it rapidly and of uniform quality.

The apparatus in use at the station has been altered several times as experience showed possible improvements, until in its present form it gives entire satisfaction.*

In this apparatus the air, before being forced into the pitchers, is dried by passing through sulphuric acid. This can be readily done and is of considerable importance, for it is very essential that the acid in the pitchers should be as strong as possible, and when the large amount of air driven through each is considered, it will be found that the quantity of water so carried in is not to be neglected. Although the air is cooled before entering the pitchers, yet, unless first dried, it will carry forward a good deal of moisture.

The cooling arrangement is composed of ten spirals of small, light tin pipe laid on a grating in a box, so that they may be lightly covered with ice and salt. This is much preferable to exposing the air to direct contact with ice. Better cooling can be obtained and the air is kept dry.

This apparatus is provided with a simple but effective arrangement for removing the fumes, so abundantly evolved during the operation. As at first built, the troughs were open, so that the acid and excessively irritating fumes were given off directly into the room, and this method has been the usual one, greatly to the injury of the health of the workmen employed.

In January, 1873, a draught arrangement was tried, which worked fairly well; but the troughs were so placed that it could not be readily applied, and in June, 1874, a new apparatus was contrived, which has answered all requirements. In this the troughs are placed around a chimney, and over them are hoods, slanting up toward the chimney, into which they open. A small fire in a grate on the floor below gives a powerful draught up the chimney, which draws a current of air across the tops of the pitchers, sweeping off the fumes and discharging them into the open air. Usually, no fire is required, the natural draught being sufficient. The advantage of this is very great, as the air of the room in which the work is going on is entirely free from fumes, and the workmen can without difficulty remain close by the pitchers, watching them carefully.

The station apparatus has six troughs, containing four pitchers each, and in it one hundred pounds of nitro-glycerine are made at a time. Two workmen are required, and two runs can be made in one day when necessary. A larger apparatus could be operated by the same force, if it was desirable.

MATERIALS.

The glycerine used for making nitro-glycerine is the commercial article of good quality. Absolutely white glycerine is not essential; but it must be free from fatty acid and contain but little water. Good glycerine can be readily obtained from many American makers, and

* In the bureau publication, "Notes on Explosives," by W. N. Hill, is given a full description of this apparatus with drawings.

indeed, the glycerine made in this country is generally better than the imported. The German glycerines are apt to contain fatty matter.

I have had but one case of seriously bad glycerine, and that was, as nearly as I could find out, of American make. This glycerine was purchased in 1872, and was found to be largely adulterated with dextrine or similar products. It was probably intended for calico-printers' or paper-makers' use. Especial pains should be taken to see that the glycerine for making nitro-glycerine is of good quality. If impure, there is a strong probability that the nitro-glycerine made from it will be dangerously sensitive, as well as of inferior explosive force. At one time I tried some glycerine which was not adulterated, but was of inferior grade, and the nitro-glycerine made from it was extremely difficult to purify, and was more sensitive than the nitro-glycerine made from the better material. The glycerine should always be tested before use.

The sulphuric acid used is the ordinary oil of vitriol of commerce.

The nitric acid is all made at the station. As far as I am aware, nitric acid of the proper strength (not less than 1.45 specific gravity) cannot be purchased in this country, and it is very necessary that the nitric acid should be of full strength.

Nitro-glycerine is much more readily made than gun-cotton, and it is possible to use weaker acid; but a great mistake is made in doing so. By using the weaker nitric acid a nitro-glycerine of inferior quality is made, and one more liable to decomposition and accidental explosion. Yet it is to be feared that many of the manufacturers neglect this important point, and content themselves with the weaker acid on account of its cheapness. Certainly much of the nitro-glycerine made and sold is bad and dangerous, as is shown by the many terrible accidents with it or preparations containing it. It is certain that good nitro-glycerine cannot be made without the strongest acids.

NITRIC ACID.

Nitric acid for making nitro-glycerine has been generally prepared at the station by careful distillation from soda, saltpetre, and sulphuric acid, in an iron still. An excess of sulphuric acid is used in the still, and the operation is conducted slowly, at a moderate temperature.

The still is cylindrical in form, and so placed in its setting that the heated gases from the fire pass twice completely around it, so that it is uniformly heated. The product of distillation is received in oil of vitriol in stoneware receivers. In this way, by taking pains, strong acid can be prepared; but the method is hardly satisfactory, as there are serious objections to it. It is slow and wasteful, as the loss is large, and in constant use the stills wear out fast. It would be much better to distill in earthenware stills from nitrate and sulphuric acid, or in earthenware or glass, from sulphuric acid and common nitric acid.

A furnace for the latter method has been prepared, but there has been no chance to use it as yet. For the comparatively small amount of nitro-glycerine made here, the arrangement for distillation at first put up has served tolerably well, but it would be very desirable to replace it with a better, if further work of this kind is to be done.

The nitric acid distilled is, as mentioned above, received in sulphuric acid, so that at the close of the operation a mixture of the two acids is drawn from the receivers. This mixture may be used directly for making nitro-glycerine, but it varies considerably in composition at different times. If the distillate was obtained in quantity and quality approximating to the theoretical proportions, it would be only necessary to put

into the receivers the right amount of sulphuric acid to obtain the mixture required. But in practice there is a varying but considerable loss, and there is always a little water present, so that no two lots are alike. It will not do, as is customary when this method is employed, to depend on the hydrometer indications for the character of the mixture. It is very evident that a mixture of much sulphuric acid, little nitric acid, and some water can mark the same number of degrees on the hydrometer as a mixture containing sulphuric and nitric acids only. It is necessary to determine the actual proportion of sulphuric acid, nitric acid, and water present. This is easily and quickly done by diluting a weighed quantity of the mixture to a definite bulk and titrating one measured portion by standard alkali and another by barium nitrate or chloride. The impurities (water, &c.,) are obtained by difference. More sulphuric acid is added to the mixture, if needed, and the latter is used in the pitchers of the nitro-glycerine apparatus in such quantities as is required to furnish the proper proportion of acids to glycerine. In this way the yield of nitro-glycerine for the glycerine used is rendered uniform.

During the operation of conversion the temperature is kept as low as possible by cooling the pitchers by ice-water and by the cold dry air used for agitating. When properly conducted there is no difficulty in doing this.

WASHING.

After its precipitation in the large vat, the nitro-glycerine is thoroughly washed by decantation. The washing is performed with the aid of an air stream, which breaks up the heavy oily liquid and spreads it through the water. For the intermediate washings sea-water may be used if desired and fresh water is scarce; but the precipitation, the first and the last two washings, should be made with fresh water. The washing is continued until complete. I have not followed the plan of using an alkaline liquid to remove acid clinging to the nitro-glycerine. This seems to me as bad work. It is possible to wash the nitro-glycerine free from acid with water, and it is much better to wash thoroughly than to trust to the use an alkali in order to diminish the amount of washing necessary. The acid is but slowly removed, and to accomplish the removal requires long washing. I have found that with sufficient washing, nitro-glycerine can be perfectly freed from acid and remain so for more than four years. When nitro-glycerine is to be kept in the liquid state, it may be desirable to add a little alkaline carbonate to the water over the explosive, to neutralize traces of acid which may appear, although there ought to be no necessity for doing this. But nitro-glycerine, which is to be employed in making the solid or semi-solid preparations now so commonly used, ought to be surely freed from acid, when made, by thorough washing.

Nitro-glycerine, as first precipitated, is a creamy-white opaque liquid, but on standing at a moderate temperature it becomes transparent and thinner.

THE "CLEARING" PROCESS.

The "clearing" process is one of value to the maker, and should be watched carefully. Care must be taken that the precipitation is performed in a large excess of water to avoid rise of temperature, which affects the condition of the nitro-glycerine. In warm weather, it is best to put some ice in the water of the precipitating vat. If the washing is thoroughly done, it will be found that, as the clearing goes on, no acid,

or but a faint trace of acid, appears in the water above the nitro-glycerine; but if it has been imperfectly done, the presence of free acid will be plainly indicated. During clearing, the water above the explosive should be frequently changed and examined for acid.

The time required for nitro-glycerine to become clear varies, according to the temperature, from ten days to two or three weeks. It may be hastened in cool weather by keeping the jars containing the nitro-glycerine in water at 60° to 70° Fahrenheit; but, when possible, it is better to allow time for it to go on slowly.

If the explosive clears without showing signs of free acid, it will remain so indefinitely.

In the magazine at the torpedo-station are more than forty samples of nitro-glycerine, made in the course of work in the last five years, which have shown no signs of change or acid reaction during the various times they have been in store, although they are kept without special precautions and exposed to extremes of temperature.

PROPORTION OF PRODUCTION.

The proportion of nitro-glycerine obtained to the glycerine used is about 1.75 to 1. Theoretically, if the equation:

$$C_3 H_8 O_3 + 3HNO_3 = C_3 H_5 N_3 O_9 + 3 H_2 O$$

correctly indicates the formation of nitro-glycerine, the product should be 2.46 parts of nitro-glycerine to 1 of glycerine. In practice, of course, there would be some loss, as the glycerine is not anhydrous, and some nitro-glycerine would be lost in handling. But, in addition, there are secondary actions, by which part of the glycerine is converted into soluble products, which are washed away.

In a series of experiments in the laboratory, using anhydrous glycerine and the strongest acids in excess, I obtained 1.92, 1.89, 2.03, and 1.93 parts of nitro-glycerine to 1 of glycerine, an average of 1.94 to 1. The product of 1.75 to 1 approaches as near to the above results as a working operation can be expected to do.*

It is also possible that the action indicated by the equation above written is not the only substitution which goes on, and that others enter into the reaction, but this I will touch upon beyond.

APPEARANCE.

As already remarked, when freshly made, nitro-glycerine is an opaque creamy fluid which afterward becomes transparent. It has been said that the original appearance of the substance is due to water entangled in it, and that on standing the heavy nitro-glycerine gradually separates from the water, assuming its natural condition. I am inclined to doubt this, and to believe that the change is really of a chemical character. It may consist of a separation of water, but this water must have been in combination, like a water of crystallization. Certain salts (crystallized calcium chloride, sodium chloride, &c.) cause the change to occur rapidly, but this might be in either case. A low temperature hinders, or, if low enough, even prevents, the change, which would not probably be true if the water was simply mechanically held. Further, I have seen

* Champion and Pellet (Bull. Soc. Chem., XIX, 494) found that 100 grams. chemically-pure glycerine yielded 190 grams. of nitro-glycerine, and remark that careful attention to strength of acid, the temperature, and all other details is necessary to insure constant results, which is indeed very true.

the opaque nitro-glycerine frozen distinctly crystalline. I have als often noticed that at different times nitro-glycerine which has been cleared will be by turns clear and turbid without cause other than atmospheric influences. This would take place in nitro-glycerine covered with water and in that which was free from water. An examination into this subject has been projected, but there has been no opportunity for carrying it on

When perfectly pure, cleared nitro-glycerine is colorless, but generally it has a slight amber or pale-yellow tint. It dissolves quite freely in absolute alcohol, and in less proportion in weaker alcohol. From the alcoholic solution water precipitates it colorless.

FREEZING.

A large number of observations have been made on the freezing of nitro-glycerine in various conditions, but they cannot be detailed here. Frozen nitro-glycerine is incapable of being exploded, as is well known, yet there are cases on record where it is said to have been exploded by blows when solidly frozen. This is but one of the instances of very different properties assigned to this body by different persons.

COMPOSITION.

It is very evident from these varying statements that the same material is not referred to in all cases, and it becomes a question of great importance to determine if the nitro-glycerine used as an explosive is a body of uniform composition, a mixture of several substances, or whether it is liable to be contaminated with impurities which affect its properties. The equation $C_3 H_8 O_3 + 3HNO_3 = C_3 H_5 N_3 O_9 + 3H_2 O$ is written on the view that nitro-glycerine is trinitrin, $C_3 H_5 (NO_2)_3 O_3$, but, as has been shown by L. Henry, there are probably two other such substitution products of glycerine or nitrins, $C_3 H_6 (NO_2)_2 O_3$ and $C_3 H_7 (NO_2) O_3$. The two lower nitrins would, of course, be less powerfully explosive than the trinitrin, and would differ from it in other ways. If these are formed in the nitro-glycerine reaction, it would probably be when weak nitric acid is used, since, in similar cases, the degree of substitution is usually dependent upon the strength of the acid employed. It is also very probable, as in many analogous cases, these lower products are less stable than the higher. It would be a work of the highest importance and interest to study the nitro-glycerine reaction, and to ascertain if one or more nitrins are formed in it, and the conditions of their formation. Some time since (1874-'75) I began experiment in this direction, but owing to pressure of other work have been unable to continue it as rapidly as I could wish. Recently, however, I have been able to return to it, and hope in the coming year to carry it on more steadily and to a conclusion. The part I am now engaged upon is the action of sulphureted hydrogen and alkaline sulphides on nitro-glycerine, hoping to be able to use such a reaction analytically on various nitro-glycerines.

Decomposition readily takes place when an alcoholic solution of an alkaline sulphide or sulphyorate is added to an alcoholic solution of nitro-glycerine. It might be expected that the action of the alkaline sulphides would reproduce glycerine with the formation of an alkaline nitrate, and this seems to occur under certain conditions, although the decomposition is evidently not as simple as by this hypothesis.

The action of sulphureted hydrogen seems to be very different. From an alcoholic solution of nitro-glycerine which has been acted upon by

ılphureted hydrogen, after some time, long white needles separate out. 'his body is under examination.

It is of interest to call attention to the possibility of making use of he crystallization of nitro-glycerine as a means of purifying it or separating it from other bodies. If nitro-glycerine be kept at a temperature near its freezing-point it begins to separate out in crystalline form, ınd with a little care well-defined crystals of good size may be obtained. Frozen nitro-glycerine is a crystalline mass, and by partially thawing listinct crystals may be separated. There are also differences in the eadiness with which crystallization on cooling takes place.

HANDLING AND USE OF NITRO-GLYCERINE.

In handling nitro-glycerine the chief difficulty experienced is the inonvenience of its liquid form; but with proper facilities this may be educed to a minimum. When it gets accidentally spilled it may be lecomposed and rendered harmless by the use of a solution of an alkaine sulphide. I have found such a solution to be very serviceable. :t may be readily made by dissolving flowers of sulphur in solution of ıodium carbonate. In this laboratory it is called "sulphur solution." When nitro-glycerine has been spilled, after wiping it up as completely ıs possible, the remainder may be gotten rid of by allowing this solution to remain upon the spot for a considerable time. Glass and porcelain vessels may be cleaned with it from adhering nitro-glycerine.

There does not seem to be much danger connected with the ordinary handling of nitro-glycerine, that is, in washing, storing, and working it up into preparations for use. Pure nitro-glycerine is not sensitive to any treatment it can receive in ordinary careful handling, but when impure it may become extremely sensitive even to slight actions.

While at the station nitro-glycerine has not been extensively made, yet sufficient has been done to show what is possible, and there has not been any accident or trouble with it. During the part of the year when such work is performed, it often happens that nitro-glycerine-making is carried on quite steadily for some time, and as we send none away we frequently keep liquid nitro glycerine and nitro-glycerine preparations in store for a long time.

What work of the kind is done is on a manufacturing scale, and with a slight increase of plant and steady use of it, large quantities of the explosive might be turned out. At various times in seven months of 1875, 1,600 pounds of nitro-glycerine were made at the station, and from 100 to 600 pounds were usually on hand in the liquid state; while of dynamite and other preparations we had about 1,000 pounds in nagazine.

In addition, experimental work with nitro-glycerine in some form ıas been constantly going on; and freedom from accident or annoyance s due, I think, mainly to the pains taken to make a pure article.

For use for torpedo purposes, liquid nitro-glycerine is inapplicable, lthough we have used a good deal of it in certain kinds of experimentıg. The solid nitro-glycerine mixtures are the practical forms in which t is employed. But in all these, nitro-glycerine is the basis and the real gent whose power is employed, and first of all comes the consideration hat the nitro-glycerine should be good, otherwise a safe and satisfacory mixture cannot be made from it. There are many forms of the itro-glycerine mixtures, but for general purposes the simplest is the est.

DYNAMITE.

Dynamite presents the most advantages. Much experimenting has been carried on at the station upon different dynamites made from various absorbents, with very satisfactory results. The requisite preparations have been made for the use of such an agent for torpedo purposes, when required.

The dynamite made here seems to be well fitted for use as an explosive agent in torpedoes. It contains 75 per cent. of nitro-glycerine, and yet is quite dry and readily handled, while it has shown no tendency to drop its nitro-glycerine at any temperature to which it has been exposed here. We still lack experience of it under more trying circumstances and with longer exposure. Measures should be taken for gaining this desired knowledge.

The direct action of water upon this dynamite depends upon the amount of water present. It can take up much water and lose little or none of its nitro-glycerine; but if it be acted upon by an excess of water, part of the nitro-glycerine separates. But with a dynamite less rich in nitro glycerine, this effect diminishes, until a 60 per cent. dynamite is hardly affected at all.

There has been much experiment at the station with nitro-glycerine and dynamite upon the methods of using them. Many different kinds of fuses have been tried. Liquid nitro glycerine can generally be exploded by fuses charged with gunpowder, but not with certainty, and with diminished violence. Such fuses should have strong copper or brass cases, and not be too heavily charged. The present service-igniter is much more sure to fire nitro-glycerine than the older wooden case igniter. Of course, a detonating fuse charged with fulminate is the only one which *ought* to be used to fire nitro-glycerine. There is no certainty that one charged with gunpowder will accomplish explosion, but, if used, it should be one which will give as sharp a blow or shock as possible.

Dynamite is fired by gunpowder fuses with no more certainty than nitro-glycerine, and with feebler effect than by detonating fuses. As in the other case, the powder fuse or igniter must have a strong metallic case. The best results were obtained with 15 to 20 grains of rifle-powder, but the best are unsatisfactory. In these experiments, many singular effects have been obtained; but, as the work is still in progress, they cannot be properly discussed now.

It has been already remarked that frozen nitro-glycerine cannot be exploded. Nitro-glycerine, being a liquid, freezes to a solid mass, and if detonating fuses are placed in the liquid before freezing takes place they may be afterwards fired and the frozen nitro-glyzerine broken up and scattered without explosion.

With dynamite the conditions are considerably different. Properly made it is quite dry and loose in its ordinary condition, and when it freezes it remains loose and pulverulent. In this state it may be nearly always exploded. If especial pains are taken to get it into a very fine, loose powder, it is almost sure to explode, but as it approaches more nearly a dense, solid mass, it is less certain that explosion will occur.

In a large number of experiments which I have made I have found this to be the case. Sometimes, even, it seemed that the looser portion of the charge has been fired while the more solid escaped explosion. If the dynamite is soft and damp, so that it will pack closely, or if driven hard in the case before freezing, the explosion becomes still more uncertain.

Differences may be noticed in readiness of firing in the frozen state in different lots of dynamite of the same strength of nitro-glycerine. Probably these are due to differences dependent upon variations in the absorbent. In these experiments detonating fuses were used. In all cases of firing frozen dynamite it is noticeable that the violence of the explosion is much less than that of the unfrozen, and it is generally accompanied by flame and smoke, indicating a slow or imperfect combustion. Further experiment in this direction, with different modes of explosion, is of importance, and is to be carried on at the earliest opportunity.

Comparative experiments on the force of explosive agents are of a very interesting nature. There is a great want of some good method of comparing these bodies, especially those which are usually called detonating. A series of experiments with different explosives was projected and begun, but from want of time and means it has not been extended far enough to arrive at any definite conclusions. It is strongly desired that these experiments may be continued, for the methods promise to yield good results.

In the summer of 1874 some experiments with large charges of nitro-glycerine in varying depths of water were made, and it was intended to continue them and extend them to other explosive agents, using the nitro-glycerine experiments as a means of comparison. Unfortunately there has been no opportunity to do this, but the plan is worthy of a full trial, for useful practical results will be derived from it. Not enough experiments have been tried to permit drawing any positive deductions, but those that were made seemed to point to curious and valuable conclusions.

GUN-COTTON.

The compressed gun-cotton made by Abel's process is the only form of this agent of value for torpedo purposes. A quantity of this gun-cotton, made in England, is at the station, which was obtained for experimental purposes, but as yet little has been done with it. It is intended to be compared with dynamite. This explosive has not been made in this country, although it seems to present many advantages for blasting and for military purposes.

At the station small amounts of long-stapled gun-cotton are made for certain special uses; the 1.5 nitric acid required is distilled and a product made with not over 5 per cent. soluble in ether and alcohol.

FULMINATING MERCURY.

The fulminating mercury required at the station is made in the chemical laboratory. At one time a good deal was used, as the service-igniters were charged with a mixture of mealed powder and fulminating mercury; but there were many objections to this method, with no compensating advantages, and it was afterward given up, and now fulminating mercury is only used in detonating fuses, (for nitro-glycerine, dynamite, and gun-cotton.) Trials were made of different modes of preparing this body. Four were compared:

1. Ordnance Manual, (1861.)—Ten oz. of mercury dissolved in 5 lbs. of nitric acid, sp. gr. 1.4. Pour solution into 6.675 lbs. of alcohol, sp. gr. 0.85. Add alcohol if reddish fumes appear.

2. Chevalier.—One part mercury dissolved in 12 parts nitric acid, sp. gr. 1.3; mix with 11 parts alcohol of 85 to 88 per cent. Heat over water-bath to ebullition. (Liebig directs the use of nearly the same proportions, but with some changes in mode of operating.)

3. Chaudelon.—One part of mercury dissolved in 10 of nitric acid, sp. gr. 1.4, and 8.3 parts of alcohol, sp. gr. 0.83.

4. Howard.—One part of mercury to 5 of nitric acid, sp. gr. 1.3, and 10 of alcohol, sp. gr. 0.85.

The first method has the drawback of calling for unusually strong nitric acid. The amount of fulminate obtained usually was about equal to the mercury used, or fell slightly below it, and there was a greater tendency to the re-formation of metallic mercury than with the second method, which gave the best results, and was the most easily managed of the four. The acid is the ordinary, strong acid of commerce. The product obtained was larger than in the other cases, varying from 1.1 to 1.24 parts of fulminate to 1 of mercury used, and the tendency to form metallic mercury is less and more easily prevented. The third was more troublesome than the first and second, and in every way less satisfactory. The product by it averaged 0.92 part of fulminate to 1 of mercury. The fourth was useless, the difficulty being in the insufficient quantity of acid taken. No fulminate, or but little, is obtained, unless more acid is added during the operation, and then the amount is small.

In several cases where this method was used, instead of fulminate there was a voluminous deposit of a white substance. This substance is not fulminate, as it is non-explosive and contains nearly 79 per cent. of mercury. It is unstable; sometimes decomposing in the dry state; insoluble in water; blackened by sulphuric acid, with slight explosion; dissolved by hydrochloric acid on long heating; dissolved by nitric acid with the aid of heat and with the evolution of red fumes; *in vacuo* over lime it lost weight constantly. Further examination of this substance had to be postponed at the time it was observed, but I shall return to it in a short time. The formation of this white substance has also been noticed in the use of the other methods, but rarely, and when the solution had not been sufficiently heated. It could usually be overcome and fulminate formed by adding more alcohol and heating to active ebullition.

I attempted to simplify the operation of making fulminate by preparing a large quantity of the mercury solution beforehand, so that when it was to be done, it would be only necessary to add a measured quantity of the solution to the proportionate volume of alcohol, and thus save the trouble and delay of weighing out and dissolving the mercury each time. I found, however, that this does not work well. The mercury solution which has been kept for some time is inferior to the freshly-made, giving a reduced yield of fulminate and a greater tendency to the reproduction of mercury. It is best to mix the mercury solution and alcohol cold, and then to place the vessel in boiling water and start the action as quickly as possible, not removing it until a strong reaction has begun. Sometimes there is a delay in the starting of the action, and it will often be found at such times that the addition of a little cold alcohol causes it to take place at once.

Fulminating mercury, as is stated, can be recrystallized from boiling water, but if boiled in water for some time it is slowly decomposed with the production of mercury oxide.

PICRIC POWDER.

Certain of the picrates have been proposed as ingredients in explosive mixtures. Potassium picrate has been so tried, but its use has not become extensive.

Ammonium picrate has been employed by Brugére and by Abel, mixed with saltpeter.

Some experiments in this direction have been made at the station, with the object of preparing a powder for torpedoes and shells, which should be stronger than gunpowder, but equally safe and with similar properties. The ammonium picrate used was prepared from picric acid and ammonia. It is a salt readily made, and which crystallizes well, dries easily, and has no deliquescent property.

Although inflammable, ammonium picrate is almost devoid of explosive properties, and must be mixed with some oxidizing agent in order to obtain the extremely rapid combustion necessary for explosion. Saltpeter is, of course, the best suited for the purpose. The ammonium picrate and the saltpeter are soft, easily pulverized substances, and a mixture of the two salts has no cohesive property, so that it cannot be worked like gunpowder, unless some substance is added which will give the desired cohesive power. In our experiments charcoal was used.*

The mixture was composed of ammonium picrate 42.18 per cent., saltpeter 53.97 per cent., and best alder charcoal 3.85 per cent. This was moistened with water, worked under the wheels, granulated, &c., as in the ordinary gunpowder processes. The powder obtained had a yellowish-green color, granulated well, and gave no difficulty in working.

The first trial was intended principally to test the method of operating, and was therefore very satisfactory. On comparing this picric powder with gunpowder it was found to have a force of nearly 1.75 to 1. This was determined by finding the charge of each required to burst cast-iron spherical shells. The picric powder, however, seemed to burn imperfectly, giving off a heavy, greenish yellow smoke. This was due partly to the fact that it was worked under the wheels but a short time; but it is also evident from an examination of the proportions used that the saltpeter was probably in insufficient quantity. I thought at the time of making that this might be the case, but for several reasons did not then alter the proportions, particularly as it was mainly desired to find the proportionate amount of charcoal which would be required in it.

It having been shown that this powder could be made by ordinary gunpowder processes and that it was considerably more powerful than gunpowder, it was proposed to continue the experiment by improving the proportions by adding more saltpeter, with the expectation of increasing the relative force of the powder, and for further trials a quantity of the ammonium picrate has been prepared in the station laboratory, but it has not yet been worked up into picric powder.

The picric powder which has been made is not more sensitive to blows, friction, or other treatment than ordinary gunpowder. It is perhaps somewhat softer. I have made its hygroscopic properties a subject of experiment, and have found that under ordinary conditions of exposure, as open in the air of a store-room, it absorbs much less water than gunpowder under the same circumstances. (Brugére arrives at the same conclusion. Abel states that picric powder is not more hygroscopic than gunpowder.)

I also placed samples of picric powder and gunpowder in a very damp place, although the powders were protected from direct contact with water. Under these conditions the picric powder absorbed more water than the other, though both became wet and pasty; but this difference was really due to the fact that the two powders were from different

* Brugére speaks of charcoal as an ingredient in war-powder containing ammonium picrate; but Abel does not state how he prepared his picric powder so that it could be granulated.

makers and had different kinds of charcoal; for on comparing ammonium picrate with the same gunpowder in the same place the former absorbed but ¼ of 1 per cent. of moisture, while the latter took up more than 10 per cent.; so that ammonium picrate does not confer upon the mixture any deliquescent tendency.

This is of importance, since it is feared that by the action of moisture attracted, double decomposition would be caused with the production of potassium picrate and ammonium nitrate. This fear would seem to be groundless, since in the manufacture the powder has been well dampened without producing any such change. Further, if there was any tendency of this kind, it would go on very rapidly, since the ammonium nitrate is highly deliquescent, whereas this powder is not strongly hygroscopic.

Whether this powder will bear keeping and handling as well as gunpowder can only be shown by longer trial of it.

A large number of experiments have been made with this picric powder as a charge for fuses and igniters, and with good results, excepting that the imperfect burning already spoken of is marked. It is possible that for such use this powder may be well suited. The experiments with this material are to be continued at the first opportunity.

MISCELLANEOUS EXPLOSIVE WORK.

Much attention and labor have been devoted to the subject of fuse and priming compositions, particularly at the time when frictional machines, magneto-electric machines of high tension, and mechanical arrangements were used as means of exploding torpedoes, and several compositions were prepared which were found to work well; but since the use of machines of low tension and galvanic batteries has become extensive they have been largely displaced and are rarely made.

Many other kinds of explosive and firing-bolt compositions have been experimented upon with varying results.

Experiments with igniters and fuses of various forms and for various purposes have been numerous.

In relation to modes of producing detonation there is opportunity for much experiment, and from it valuable practical results may be expected. Abel has shown that gunpowder may be more violently exploded by a detonating fuse than by an ordinary ignition. Roux and Sarrau have used a violent explosive as the fuse-charge.

I have fired gunpowder with great violence, using small amounts (¼ to ½ ounce) of dynamite as the means of explosion. It is important to ascertain if with fuses of this sort it is possible to obtain much better effects from gunpowder in torpedoes than when it is fired in the usual way.

LIQUID CARBONIC ACID.

The subject of making liquid carbon dioxide on the large scale for use as a motor for locomotive torpedoes, has received considerable attention.

Trial has been made of an apparatus for this object, invented by the writer in 1873, which has proved very successful.

This apparatus is a combination of a generator in which the carbonic acid gas is evolved from marble-dust and sulphuric acid with a compressing-pump driven by steam, which receives the gas from the generator at a high pressure and compresses it up to the point of liquefaction. Two generators are used, to be worked alternately, so that while

ıe is delivering gas the other is being cleaned out and recharged. hese generators are of cast iron, of the kind used for generating carbonic acid gas for the manufacture of soda-water. From the generators ıe gas passes to an iron receiver, which serves the purpose of catching ıything which may be accidentally carried over from the generators ınd also as a reservoir of gas. From the receiver the gas passes through ı large coil of lead pipe which is placed in a tank where it can be cooled ıy the waste ice, and from the coil through a felted pipe to the compressing pump. The gas is taken into the pump at a pressure averaging 100 ounds to the square inch, and by it carried to a pressure of from 400 to 00 pounds, according to temperature. The compressed gas passes hrough a pipe to a receiver, which is surrounded with a mixture of ice ınd salt, and in this receiver the liquefaction takes place.*

The prominent feature of this apparatus is the delivery of the gas to he compressing pump at a high generating pressure. In this way great ıdvantage is gained. The work of compression and consequently the ıeat evolved by compression are very much less than if the gas were taken at the ordinary pressure, and it becomes possible to liquefy large quantities of gas in a short time. As the pressure of generation is not excessive the gas can be prepared in large generators.

The liquid gas can be made at a moderate cost in this way, since the cheapest materials may be used and the operation rapidly performed.

For reasons which will be stated beyond, for a long time it was not possible to make use of this apparatus, but there has been made with it more than 5,000 pounds of the liquid. The rate at which it can be run is about 60 pounds per hour, including all work, (getting steam, material, &c.,) but when in steady use it reaches 80 pounds per hour. I have made 466 pounds in 5 hours and 5 minutes actual operation and 8 hours total working time, which includes everything incident to starting and stopping work, and at another time 706 pounds in 8 hours and 20 minutes actual running and 11 hours full working time. It has in practice done much better than I had expected.

Experience with this apparatus has not shown any important alteration necessary. Some little additions in the way of meansf or handling the materials used in it would facilitate work with it. It seems to be all that can be desired for an apparatus to be permanently located in a place where the coal, ice, and other materials (acid, marble-dust, and water) can be easily obtained as at this station. This apparatus is larger than is perhaps actually necessary, and might be made considerably smaller and lighter, and yet have capacity enough for any probable requirements.

If it was desired to have an apparatus which could be readily transported, it would probably be necessary to have recourse to a simpler ırrangement, based upon Thilorier's method of liquefaction by the pressure of generation, although from the much greater difficulty and cost ıf working with it Thilorier's plan is not nearly as good as the one which has been considered. Mr. Lay uses an apparatus on the Thilorier ırinciple, but there are many objections to the manner of its construction. A better one could be built if it was required.

In making liquid carbonic acid with the apparatus used at the station, r one on Thilorier's plan, (such as Lay's,) large quantities of ice are eeded. This is a serious drawback to the application of liquid carbonic cid to torpedo purposes, as it will often be very difficult, if not impossible, to get ice at the stations where the apparatus might be wanted for

* A full description of this apparatus, with drawings, is given in the bureau publicaon, "Liquid Carbonic Acid," by W. N. Hill.

such use. I believe, however, that my method may be modified so as to avoid the use of ice altogether, and I have designed an apparatus for accomplishing this result, (see "Liquid carbonic acid," page 22.) The arrangement is simple and promises to be successful. If it is, the whole apparatus may be mounted on board ship and operated there at any time. Such a vessel would have to carry for this use marble-dust and sulphuric acid only. There would be little difficulty in doing this on a specially fitted vessel, and locomotive torpedoes would hardly be handled from any other.

For a motive power for locomotive torpedoes, liquid carbonic acid has many advantages over compressed air or ammonia, and if it can be made as readily as claimed above, I think it will be preferred to either in certain forms of those weapons; although for others different means of propulsion will doubtless be better fitted.

Another branch of the same subject has also been quite thoroughly worked out. The tension of liquid carbonic acid at the temperature at which it is kept and used is very great, (73.8 atmospheres, or 1,107 pounds at 86° Fahrenheit, according to Regnault,) and very strong vessels are required for preserving it. When the new apparatus previously spoken of was finished, it was at once put in use, and the receivers for containing the liquid belonging to the Lay torpedo at the station were filled. Shortly after the completion of this work one of the receivers or flasks burst explosively. Fortunately no one was injured, and no very serious damage was done; but the occurrence led to the condemnation of the flasks as too weak and of undesirable construction.

It was necessary to obtain stronger vessels. After careful examination it was decided to try a method of making flasks by building them up from pieces of sheet steel, and six of these flasks have been constructed for the station by John Matthews, of New York, the inventor of the method, the supervision of the work on the part of the station being in my charge. Of course this required considerable time, during which no use could be made of the apparatus.

The method consists, essentially, in forming a cylindrical vessel with rounded ends from sheets of thin steel, solidly fastened by means of pure tin. The cylindrical part is made from cylindrical shells rolled up from the sheets fitted together in numbers sufficient to give the desired thickness of walls, and finally turned into a single piece by the tin. The heads are formed from cup-shaped pieces of steel struck up from the sheet, which are put together with tin also, and the finished heads are placed over the ends of the cylinders, and fastened on with tin. (The full details of this new and interesting method of building up vessels capable of withstanding enormous pressures are given in the bureau publication "Liquid carbonic acid," already referred to.) In this way may be built up a receiver of any desired thickness and strength. In the course of trial of the method these receivers have been exposed to very severe strains, which they have borne perfectly. One of those made was tested to destruction, giving way under a hydraulic pressure of 3,136 pounds to the square inch. It had but four layers of steel of .045-inch thickness, and was 13 inches in diameter.

Evidently, from the manner of its construction, such a vessel is not likely to burst explosively, but if strained beyond its endurance will gradually yield; the sheets separating and allowing the pressure to escape. Indeed, during the working out of the methods of manufacture, it happened that flasks have shown that they were not perfectly put

gether, and under trial the weakness showed itself in this way. It is sy to test thoroughly their strength before use.

Of course it has required much thought and experiment to work out ı entirely new process like this, but it has now been quite satisfacrily accomplished, and it may be safely stated that by this method ceivers to sustain great strains may be surely made. Some minor ıints of the manufacture yet remain to be decided by longer trial of e vessels already made and by experience in making others.

From the possession of the apparatus above described, the station has cilities for making very easily large quantities of liquid carbonic acid. ıis is an unusual opportunity for scientific experiment of a very im-rtant and deeply interesting character. On the liquid itself there is wide field for experiment. In one direction I have already submitted plan which deserves attention. This involves an extensive series of ıservations of the tension of its vapor at different temperatures, and ı behavior under varied conditions. This subject will repay study, pecially with the means of operating on a large scale which we have. ther valuable investigations with its aid may be made. Professor enry has suggested one on the magnetism of metals at low tempera-ıres. I would make special mention of these matters, as subjects which ıould be experimented upon here. Also I would recommend that ıientific experimenters, who desire to study kindred topics, may be llowed the use of the apparatus and other means at the station of this ind.

INSTRUCTION.

The instruction of the officers ordered to the station for that purpose ıakes up a large part of the duty to be performed. Eight classes have ıeen here since November 1, 1870. The course pursued has varied from ime to time with the varied requirements and means at hand. The nstruction in chemistry given to the last class has consisted principally ıf two courses of weekly lectures, of two hours each, one on general hemistry and the other on explosives.

In the lecture on explosives, the chemical relations of and the meth-ıls of manufacturing and handling the different explosive bodies are reated of with their special adaptation to torpedo and other military ses. Both these courses of lectures are illustrated by experiments and he use of diagrams and drawings projected upon a screen with the cal-ium light.

The officers attending are expected to take notes, and each week a eries of questions based upon the lectures are given to them, which are ı be answered by each one in a book specially intended for this use, hich is examined and corrected by the instructor.

The following examples of questions given out at different times will ıow the method followed:

Week ending July 14, 1876.

Chemistry:

1. Ammonia and ammonium salts.
2. Fluorine and hydrofluoric acid.
3. Chlorine; preparations, properties, and uses.

Explosives:

1. Gunpowder; breaking down and pressing; granulation, glazing, finishing; drying.
2. Tests of gunpowder; value of eprouvette testing.
3. General composition of gunpowder.
4. Products of explosion of gunpowder.

5. Chloride, bromide, and iodide of nitrogen.
6. Explosives in torpedoes.

In addition, the officers under instructions are familiarized witl making of nitro-glycerine, dynamite, fulminating mercury, and explosives, and the modes of using them by experiment and pra with them.

MISCELLANEOUS WORK.

Besides the varieties of work which have been outlined in the going pages, much other work has to be done in the laboratory station like this. In the laboratory are prepared battery-solution agents, and other chemicals, fuse-compositions, &c., as they are requ firing-bolts, &c. Analytical work of various kinds has been perfor such as analysis of signal-fuse and firing-bolt compositions, clays, ral waters, mixed acids, wrought irons, and testing white-lead, gl ine, and other articles used at the station. Full records are kept the work and experiments which have been performed, so that refe to any part can be easily obtained.

To a very large extent, the work which has been performed t present time has been preparatory. Everything had to be done the beginning; laboratories built and supplied with needed appa and facilities, and to do this has required much labor and pati Much routine work has always had to be done. Consequently, ex mental work has been greatly hampered and hindered. It may be however, that the preparations for useful work are now better than ever have been, and very much is planned and now going on.

Very respectfully,

WALTER N. HILL,
Chem

Capt. K. R. BREESE, U. S. N.,
In charge of Torpedo Station.

l "B," is herewith appended, and an extract from the purchase
ɔt between Mr. Lay and the Navy Department, a copy of which,
l "C," is hereunto appended; and we have the honor to make the
ng report:
etailed account of the several trials that we have witnessed,
l "D," is appended to this report.
are unanimously of the opinion that the Lay torpedo-boat is a
le implement of warfare, and that in time of war it would be a
able auxiliary to the naval service. We also recognize the
ity of officers being sufficiently familiar with it to prepare it for
and manipulate it. We believe it to be the most valuable
le torpedo of which we have any knowledge. Its range, one and
(1½) miles, and its ability to be started, stopped, and steered with
ease by an operator stationed at any fixed point, seem to render
lse in this direction desirable. Probably this torpedo-boat would
be used at a distance exceeding one-half (½) or three-fourths (¾)
ile, but we consider a farther range than this desirable, in order
e boat may be maneuvered or sent against a second target if the
hould be missed. We are of the opinion, however, that this
o-boat can be improved in point of speed and in some other

have also to report that this torpedo-boat did not fulfill that part
purchase contract which requires it to run a distance of one and
(1½) miles at the rate of nine (9) miles per hour. Upon reference
detailed account of the trials, it will be seen that the distance of
d a half (1½) miles was made at the rate of six and seventy-eight
dths ($6\frac{78}{100}$) miles per hour. The conditions that the boat should
e and a half miles, and be started, stopped, and guided at the
an operator, were fully complied with.
have the hono to be, sir, very respectfully, your obedient servants,

DANIEL AMMEN,
Commodore, U. S. Navy.
C. H. BALDWIN,
Captain, U. S. Navy.
J. L. DAVIS,
Captain, U. S. Navy.
MONTG. SICARD,
Commander, U. S. Navy.
FRED. RODGERS,
Commander, U. S. Navy.
R. B. BRADFORD,
Lieutenant, U. S. Navy.

. GEO. M. ROBESON,
Secretary of the Navy.

[Indorsement by the Chief of Bureau of Ordnance.]

chief of bureau cannot agree with this report, and is of opinion
e Lay torpedo is now what the Gatling gun was in 1861, a weapon
ibilities but of no practical utility. The board saw a success, I
nizant of many failures.
resent defects are, too great size; length of time required for its
ation; if carbonic acid gas is used, the necessity of a complicated
tus and materials not always to be obtained for its generation;
eat want of speed.
is now under contract to deliver a boat which would make 9

statute miles; but he has not yet succeeded in going quite 7. I demanded 12 knots as the least speed likely to be effective in warfare, but conceded this point to the urgency of Mr. Lay. I am quite sure that with the same torpedo-boat in our hands we can make it go 9 knots; but this is a very moderate speed.

There is yet to be devised for it some safe and commodious method of carrying it inboard and launching it through a port, or safely securing it outboard for carriage at sea.

I am, therefore, of the opinion that as a practical implement of warfare it is valueless until greatly improved.

A.

NAVY DEPARTMENT,
Washington, April 20, 1876.

SIR: A board, of which you are hereby appointed senior member, to consist of yourself, Captains Baldwin and Davis, Commanders Sicard and Rodgers, and Lieut. R. B. Bradford, will assemble at the Washington navy-yard on Saturday, April 22, at 9.30 a. m., to witness and report upon such trials and tests of the Lay torpedo-boat now at that yard as will enable you to form a judgment upon its efficiency as an implement of warfare, and its probable utility to the naval service, and also as to whether it complies with the requirements of the accompanying extract from the contract with Mr. Lay under which it was built.

Lieutenant Bradford may manipulate the boat if Mr. Lay so desires, or any other person under his direction. You will also have such maneuvers performed as may be necessary to enable you to form a clear conception of its practical value.

You will therefore have careful notes taken of distances, time of starting and stopping, spaces passed over, and every circumstance favorable or unfavorable to the machine.

Respectfully, &c.,

GEO. M. ROBESON,
Secretary of the Navy.

Commodore F. A. PARKER,
Chief Signal-Officer, Annapolis, Md.
(Commodore Ammen afterward substituted.)

B.

WASHINGTON, D. C., *April* 20, 1876.

SIR: I have learned incidentally the nature of the orders issued from the Navy Department that are to govern the trial of my torpedo-boat at the Washington navy-yard on Saturday, the 22d instant.

I feel constrained, in justice to myself and to the expected performance of the boat, if the trial is to take place at the time designated, to request that the order be modified by supplementary instructions to the official board to the following effect:

1st. That the board be directed to allow me to designate the point from which the boat shall be launched and started.

2d. That the course over which the boat shall be run shall be fixed under the direction of myself and those who assist me in manipulating its movements.

3d. That the official board be instructed, in any report they may make in reference to the distances made and speed attained by the boat, to take note of the fact that I have a formal standing proposition before the Navy Department for the modification or substitution of the engine now in use, stipulating that the boat shall, with such modification or substitution, attain the speed named in the specifiations of my contract with the Navy Department.

These modifications of the order which I now request seem to me to be just and necessary to a fair trial of the boat at the time and place designated. I therefore respectfully urge a compliance with the request herein contained.

JOHN L. LAY.

Hon. GEO. M. ROBESON,
Secretary of the Navy.

[Indorsement.]

I think, that to save all difficulty and question as to the invention, and to leave the inventor no cause of complaint in any event, the first and second of his requests should be complied with, and that he should be *first* allowed to start from any point he thinks *most* advantageous, and take such course as he may desire, and execute such more-

to show the quality of his boat, as *he* may think fit; and that he should *then* required to move his boat along the course and in the manner desired by the and the board commandant of the Washington navy-yard will take action accord-

GEO. M. ROBESON,
Secretary of the Navy.

C.

; for the consideration hereafter mentioned, he will furnish to the Navy Depart- ne of his improved torpedo-boats and conduct such experiment with it at the o-station, Newport, R. I., as may be necessary, upon the following conditions: l be started, stopped, and guided in any direction at the will of the operator. l be run a distance of one and a half (1½) miles in a straight line at a speed of nine les an hour, or it may run a distance of seven-eighths (⅞) of a mile and be brought o the starting-point. It shall chase and strike a vessel of not less than one hun- nd thirty feet in length, moving within a radius of not over three-fourths (¾) of from the operator at a speed not exceeding five (5) miles per hour, the Govern- urnishing such men and vessel as may be necessary to make the trial.

D.

of the trial of a torpedo-boat, exhibited by John L. Lay, before a naval board, convened by an order of the honorable Secretary of the Navy, dated April 20, 1876.

Ir. Lay's contract with the Navy Department required his torpedo-boat to make of speed, one statute mile (divided into quarters) was laid off, from the navy- vater-front across the shoal water of the Anacostia toward Buzzard Point. This was selected by Mr. Lay as most convenient to himself.

UNITED STATES NAVY-YARD,
Washington, April 22, 1876.

board above referred to met at 10.30 a. m., and consisted of Commodore Daniel n, Capt. Charles H. Baldwin, Capt. John L. Davis, Commander Montgomery , Commodore Frederick Rodgers, and Lieut. R. B. Bradford.

Lay appeared before the board and stated that he could not run the torpedo- along the course selected by him, as he feared that there would not be water h to float her properly. He, however, requested permission to show the turning orking qualities of his boat by maneuvering her in the channel of the Anacostia, ly off the navy-yard. This the board assented to, and proceeded to the forecastle United States steamship Wyoming, from whence a good view of the maneuvers be obtained.

torpedo-boat was steered by Lieut. R. B. Bradford, (at Mr. Lay's request,) and and down the channel several times, and on various courses; obeyed her helm ly; could be directed with certainty on any given course; turned 180° four times, n short, maneuvered well—the board being satisfied that she could be readily and niently controlled. A small torpedo, containing about a pound of powder, was led from her bow at the will of the operator. While running, the boat heeled t some 5°.

eing evident that there would probably be difficulty in making the speed-trial of rpedo-boat across the Anacostia flats, (on account of the shoalness of the water,) ard directed a statute mile (divided into quarters) to be laid off from Giesboro' on the Potomac River, toward Bellevue magazine.

this line the marking-stakes were so planted that the torpedo-boat could be run el to them in deep water.

APRIL 24.

Lay had the torpedo-boat opened, and her mechanism and its mode of action explained to the board.

APRIL 27.

board met at 10.45 a. m., and proceeded in the United States tug Rescue to the red course off Giesboro' Point. The torpedo-boat had been previously towed to the same point by a steam-launch.

conference with his assistants, Mr. Lay stated that the torpedo-boat could not her then condition, some internal derangement (which was not explained at ne) having taken place.

boat appeared to settle deeper in the water than usual.

Lay seemed desirous to run, and at his suggestion an attempt was made to hoist at (at the Rescue's davits) for the purpose of getting at her bottom, and, if pos- putting her in condition to make the run.

The davits proved too weak to raise the boat, so it was concluded to give up the trial for that day, and all returned to the navy-yard.

After an examination had been made of the interior of the torpedo-boat by Mr. Lay's assistants, the reason why she settled deeper than usual was understood to be as follows: One end of the cable passes (by means of a stuffing-box) from the compartment containing the cable to that containing the engines. This stuffing box had not been set up properly, and the air, which usually occupies a considerable part of the space around the cable, had been driven by the water-pressure through the loosened stuffing-box into the engine-compartment. The space thus vacated being full of water, the boat lost a portion of her buoyancy.

APRIL 28.

The board meet at 10.30 a. m., and received a communication from Mr. Lay, expressing his desire to run on the measured course as laid off from the navy-yard toward Buzzard Point.

The tide was unusually high, and the board assented to the arrangement. The distance being three quarters of a mile and return—with the wind (and a slight sea or wash) about two points on the boat's port bow—running down.

Previous to the trial it was proposed that one of Mr. Lay's assistants should be stationed at the end of the outward course, to turn the boat by hand, and place her in position for the return run. The object of this was to save cable and gas expenditure.

The board, having on a previous occasion witnessed the maneuvering of the boat, did not require any further experiments in that direction, and consequently assented to the arrangement.

The speed trial commenced at 10.52 a. m., the board being stationed on the United States steamer Alarm, at the commencement of the measured distance. Commander Sicard coursed the torpedo, and Lieutenant Bradford steered and managed her through the key-board.

The run down the course (against wind and sea) was very creditably made. The boat showed a tendency to go to port, requiring the port helm frequently, but she obeyed quickly, and was perfectly under command. She heeled about five degrees to port.

After passing the stake that marks three-fourths of a mile, the boat was stopped by Lieutenant Bradford, and, being turned by Mr. Lay's man, commenced her return. After running about one hundred yards she did not appear to answer to her helm, and it was immediately found that she had stopped.

She was towed to the navy-yard, when it was found that the cable had fouled around the propeller, being jammed with many turns around the screw-shaft between the hub of the propeller and the end of the sleeve through the boat's stern; the cable was also parted.

The following intervals of time were consumed by the torpedo-boat in passing between the quarter-mile stakes on this occasion:

	m. s.
First quarter mile	2.12
Second quarter mile	3.18
Third quarter mile	2.19
Made the three-quarters	6.49

This is at the rate of 6.60 (six and six-tenths) statute miles per hour.

MAY 3.

The torpedo-boat being ready for another speed trial, the board met at 1.30 p. m., and proceeded from the navy-yard in the United States tug Rescue, toward the measured course of Giesboro' Point. The Rescue's davits had been shored up, and the torpedo-boat was hoisted by them, she hanging just clear of the water.

While running down toward Giesboro', Mr. Lay informed the board that he had only cable enough in his torpedo-boat to allow her to run one and a half miles. He also stated that the cable in the boat was heavier than that which had been used on the occasion of the former trial.

Arrived at Giesboro', the steering signal was planted and the Rescue anchored just above the northernmost end of the measured course.

The torpedo-boat was lowered and prepared, and started upon her speed-trial; the tide running ebb about one-quarter knot per hour.

The boat was coursed by Commander Sicard, and steered and managed by Lieutenant Bradford, at Mr. Lay's request. She ran about one hundred yards and stopped; examination disclosed the fact that her cable was broken; having been fouled by the propeller. Many jamming turns were taken around the screw-shaft, between the propeller hub and stern of the boat.

She was brought back to the Rescue and hoisted clear of the water; the fouled cable was cut away; and the remainder, or good part of the cable, was properly connected and tested.

GARDNER MACHINE GUN.

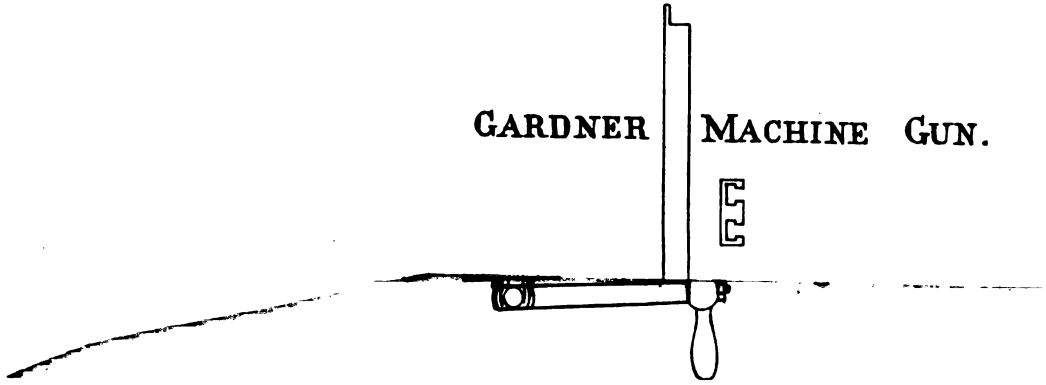

FIG. 1.

:arted upon her speed-trial, and ran down the measured course, (three-
steering very well indeed. On passing the three-quarter stake she
l after being turned by Mr. Lay's assistants, started on her return run.
ɔout one hundred yards she stopped; and examination showed that
in fouled around the propeller; many turns were taken tightly about
of the boat, and the cable was parted as before. The trial being con-
, the torpedo, &c., returned to the navy-yard.
tervals of time were consumed by the torpedo-boat in passing between

	m. s.
ı in	2.16
ile in	2.09
e in	2.14
uarters made in	6.39

ters of a mile was made at the rate of 6.77 (six and seventy-seven
te miles per hour, including a slight current in favor of the boat.
d.

MAY 6.

at being reported ready for another trial, the board assembled at 11
ed from the navy-yard in United States tug Rescue to the course off
ıy stated to the board that the boat's cable was not sufficiently long
of over one and one-half miles.
Commander Sicard coursed and Lieutenant Bradford steered and man-
he tide was running ebb at the rate of one-quarter knot per hour.
ı a run of one and one-half miles was successfully accomplished, the
rently exhausted just as the boat completed the distance. At the
ı stake she was turned by hand as usual. She started on this trial
answering her helm quickly, and was perfectly under command. As
l the port-helm frequently, and heeled to port about five degrees.
equiring the port-helm frequently is not a point of very special im-
nanagement, though, of course, she would be more perfect if it was

ntervals of time were consumed in passing the stakes on this occa-
no wind:

Running down.

	m. s.
	1.50
ile	1.54
e	2.09
Returning.	
ı	2.28
ile	2.33
le	2.26
	13.16

plished the run down at the rate per hour of 7.36 statute miles.
as accomplished at the rate per hour of 6.18 statute miles.
one and one-half miles) was accomplished at the mean rate per hour
es.
nd third trials the principal difficulty was a very simple one and
remedied, as the fouling of the propeller by the cable was obviated
a simple extension of the cable hawse-pipe to a point just abaft the

---

ORDNANCE OFFICE, NAVY-YARD,
Washington, D. C., December 14, 1875.

eave to submit the following report on the "Gardner gun,"
ı subjected to trial at this department agreeably to your
ı the bureau's order of November 30, 1875.
erred to is very simple in construction, consisting of a
ıme, in which are inserted two rifle-barrels, the chambers
ed by two simple and strong steel locks, which receive
om a double cam operated by a hand-crank. Each lock
th a simple strong steel hammer actuated by a stout main-

spring. The locks and cam are inclosed in a bronze box which occupies the rear end of the machine.

Cartridges are fed to the gun through the upper side of the bronze box, and drop from the feed-case into a lodgment in rear of the barrels. The rate of feed is controlled by a couple of levers, (just under the feed-ports) gearing with the forward ends of the lock-plungers by a simples series of studs and bevel edges, in such a way as to open the feed when a plunger is withdrawn, (thereby allowing a single cartridge to descend,) and closing it off as the plunger advances to push this cartridge into the barrel. This arrangement is intended to prevent the crowding of cartridges toward the chambers, which in machine-guns sometimes leads to jamming of the mechanism.

The feed-case is a simple rectangular box, of thin wood, with tin partitions dividing it vertically into four passages; it is fitted with a sliding tin bottom and holds forty cartridges in four columns, one column having access to each of the two feed-ports at the same time; the two other columns being stopped off by the tin bottom. When the first two columns are exhausted, a lateral movement of the case brings the remaining two columns over the feed-ports, and opposite the holes in the tin bottom.

The feed-case is about eight inches high. Alternate columns of cartridges feed at the same time.

This gun fires Burdan cartridges, caliber 42.

The feed-ports are not correctly placed as regards the rear of the barrels. This being the first gun manufactured, the ports (by a mechanical error) were not so situated as to give a vertical drop to the cartridge from the feed-case into the mechanism. This perhaps places the piece somewhat at a disadvantage as regards smoothness of feed.

The trunnions of the gun rest in a saddle which is connected with a tripod in the ordinary way, giving motion in horizontal and vertical planes. There is no traversing arrangement attached; and I learn that none is yet designed.

On the morning of December 2, the gun was set up in the ordnance finishing-shop and its mechanism explained. It was then easily carried to the experimental battery by one man, (another carrying the tripod.) After being set up near the edge of the water, and depressed about fifteen degrees, the piece was fired 1,200 rounds.

While delivering this fire the gun stopped five times; the stoppages lasting from six to thirty seconds, and being in each case due to imperfection in the feed-arrangements. In order to clear the mechanism it was usually necessary to throw back the cover from the locks, when the whole internal mechanism is easily seen, and the cartridges in the guides can be taken out by hand very readily.

Besides the stoppages above enumerated, there occurred one more serious, (lasting two minutes fifteen seconds,) which was due to the intrusion of a piece of lead from the bullet into the extractor recess cut in the upper part of the rear face of the left barrel. This lead prevented the hook of the extractor from entering its recess to take hold of the butt of a cartridge-shell ready to be withdrawn.

The lead was removed from the extractor recess by the point of a knife-blade, the mechanism (as before remarked) being wholly exposed on raising the cover.

The firing ceased, for the morning, at 1,200 rounds, the gun having averaged 111.4 shots per minute, (including stoppages.)

In one minute 153 shots were fired, and in three minutes 400 shots; this included several of the above-mentioned stoppages.

Enlarged Sketch of the Working Parts of the Gardner Gun.

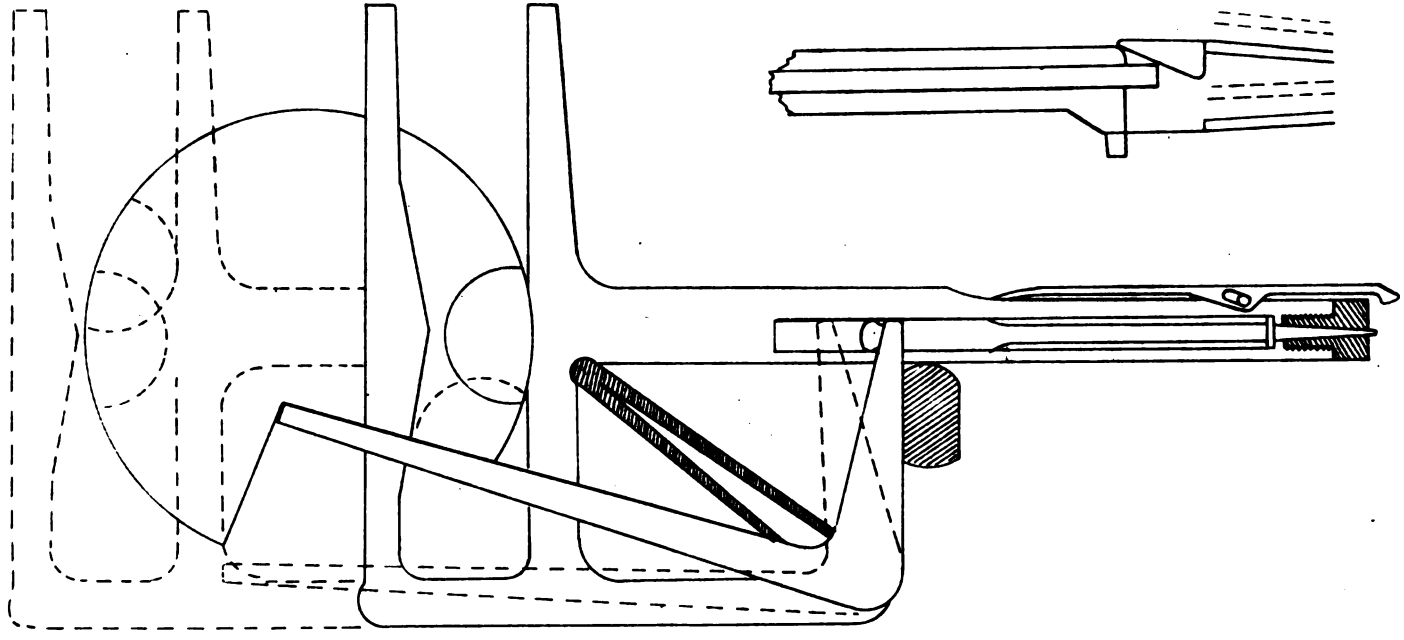

Toward the close of this practice, the barrels became greatly heated, passing to a blue color; paper ignited readily when placed between them. The heat did not affect the working of the piece and did not extend to the breech-mechanism.

On the afternoon of December 2, 1,920 rounds were fired. Cartridges jammed in feeding fifteen times, causing stoppages ranging in duration from ten to thirty-six seconds each. Besides the above, one shell failed to extract, causing a stoppage of one minute, and a lock was shifted twice, causing stoppages amounting to three minutes thirty-seven seconds. The locks were also oiled, with a stoppage of fifty-four seconds.

The barrels a great deal of the time were at a blue heat and ignited paper readily. The working of the gun was not affected.

The shifting of the lock the first time was not strictly necessary, but was done at the desire of Mr. Gardner. The new lock not having been oiled, soon worked a little stiff, and showed some slight wear at the points where the bearing faces come in contact with the cam. Subsequently the first lock was replaced after having been lubricated with tallow. It worked admirably during the rest of the trial. I am informed by Mr. Gardner that these locks and the cam are made of soft steel.

This afternoon the gun averaged 73 shots per minute, including stoppages; the latter averaging in the aggregate to 12′ 13″ in the space of 26′ 20″. The piece was not, however, running on speed.

Six cartridges were recovered, from under the gun, struck by the firing-pin but not exploded; a few of these on being passed through a second time were discharged.

Twelve cartridges were picked up which had not been in the barrels of the piece; these were probably dropped during the various stoppages while the feed was being cleared.

The fifteen stoppages due to jamming of cartridges in feeding were all caused by the cartridges entering the breech-mechanism bullet down.

The intention of the inventor was to have had these cartridges drop into the mechanism with their axes approximately parallel to that of their barrel. This object was defeated partly by the nature of the cartridge, (the Berdan, which has a bullet of less diameter than that of the powder-charge,) partly by the manner of stowing these cartridges in the feed-cases, (the upper ones naturally inclining bullet downward,) and partly to the fact that the gun was fired at considerable depression, which naturally caused the points of the cartridges to crowd toward the forward lower part of the feed-case. Their axis showing thus:

As the cartridge is released from the feed and is met by the advancing plunger the position of its axis is unfavorable to proper loading, and the result is frequently a jam, as shown in the sketch.

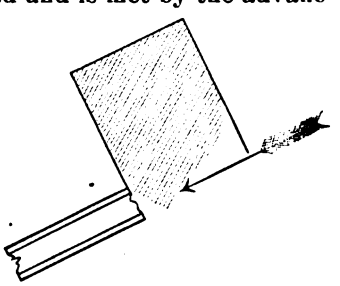

Mr. Gardner concluded to make an alteration in some of his feed-cases, with the object of preventing the cartridges from working toward the forward side of the feed-case when the gun is fired at a depression. For this purpose he soldered four wires on the inner sides of each compartment in the feed-case in such a manner as to catch the flanges on the butts of the cartridges, thus holding them toward the rear of the case and allowing them to descend toward the

feed-ports without sliding forward. This arrangement was somewhat as shown in the annexed sketch.

On the afternoon of December 3, the gun was again fired at the water's edge. The gun was depressed about 20°, and 1,100 rounds fired.

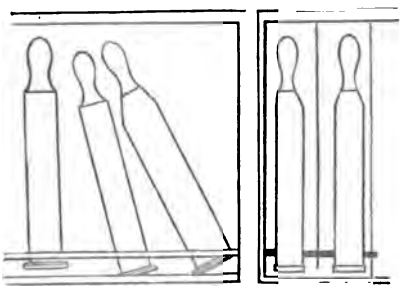

The new arrangement of the feed-case was found to be an improvement, but did not entirely prevent the entry of the cartridges into the piece bullet first, and *consequent occasional* jamming. Eight hundred rounds were then fired with the gun about 4° elevation, but the feed did not show very material improvement, and at no time this afternoon could more than 200 rounds be fired without a stoppage, which, however, only lasted from 10 to 20 seconds.

The same lock that gave trouble the previous day commenced to work stiffly during this last trial. It was taken out, rubbed with emery-paper, and replaced, (after being tallowed.)

It worked smoothly during the rest of the trial, at a rate of speed much exceeding 200 shots per minute. When running at speed, the empty cartridge-shells (after extraction from the barrel) are liable to be caught by the advancing plunger, before gravity has had time to draw them down clear of the mechanism. This fault could probably be obviated by increasing the throw of the cam, thus causing the locks to travel farther, and giving more time to the descending shell. It will be observed that most of the defects discussed in the foregoing report are due to the defective feed, and can, I think, be remedied without much difficulty. The wear on the locks and the limited throw of the cam are defects in the gun proper, and are also probably easily remedied.

I regard the performance of this gun as very remarkable, and its strength, lightness, and extreme simplicity as most admirable. It seems only to require a little improvement (mostly in the feed) to make it all that can be desired in a machine-gun.

It will, of course, be understood that in a piece which loads and extracts with such extreme rapidity, the cartridge-shells must be of the best quality, both as regards material and workmanship.

In extraction, particularly, there would be a great risk of tearing the butts entirely off a weak cartridge-shell, when the next round would stop the gun.

I am, sir, your obedient servant,

MONTG. SICARD,
Commander, and Inspector of Ordnance.

Commodore T. H. PATTERSON,
Commandant Navy-Yard, Washington, D. C.

ORDNANCE OFFICE, NAVY-YARD,
Washington, D. C., February 11, 1876.

SIR: Agreeably to your indorsement on an order from the Bureau of Ordnance, dated January 31, 1876, I beg leave to report as follows regarding an examination and trial of the Bailey machine-gun.

This piece was presented by its projector, Mr. F. L. Bailey, of Indianapolis, Ind. In general external appearance it somewhat resembles

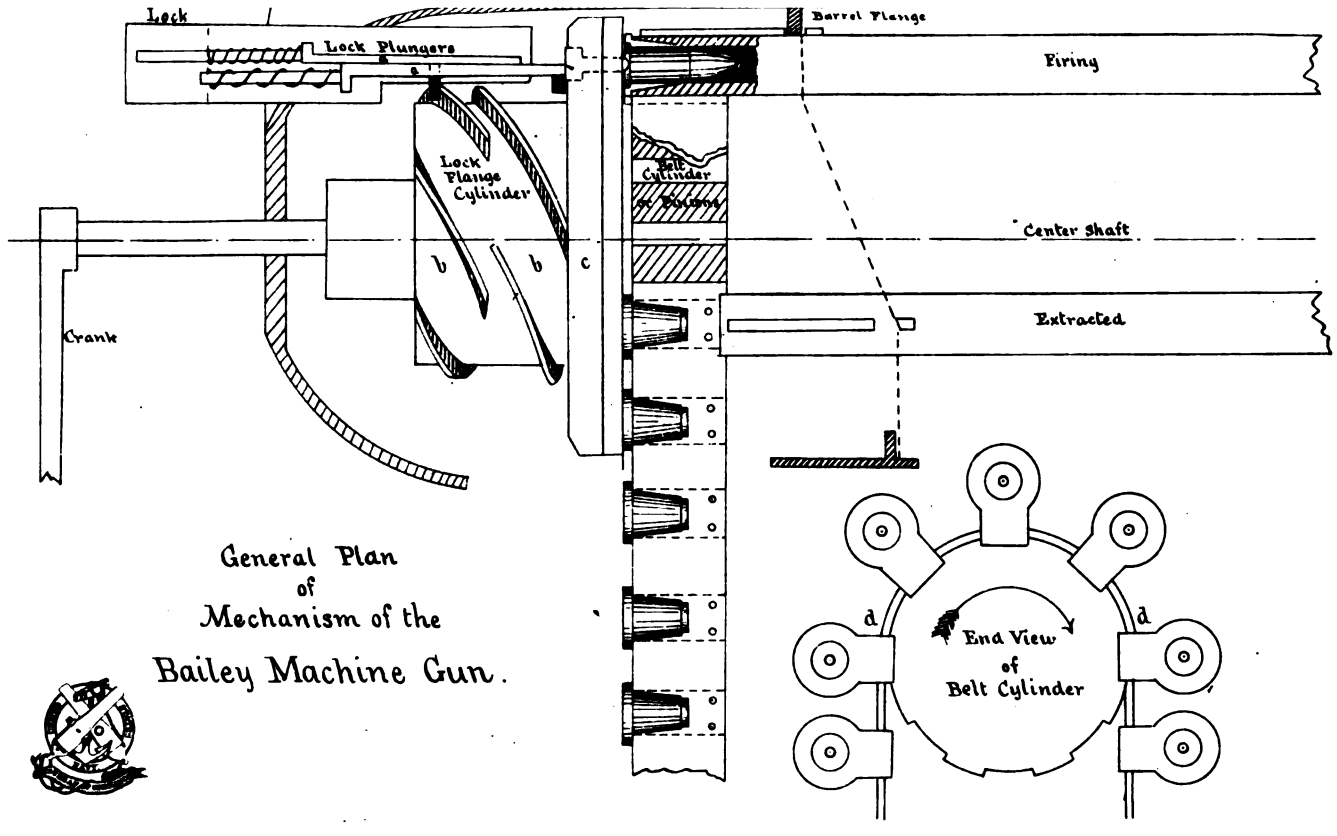

General Plan of Mechanism of the Bailey Machine Gun.

Plate 2.

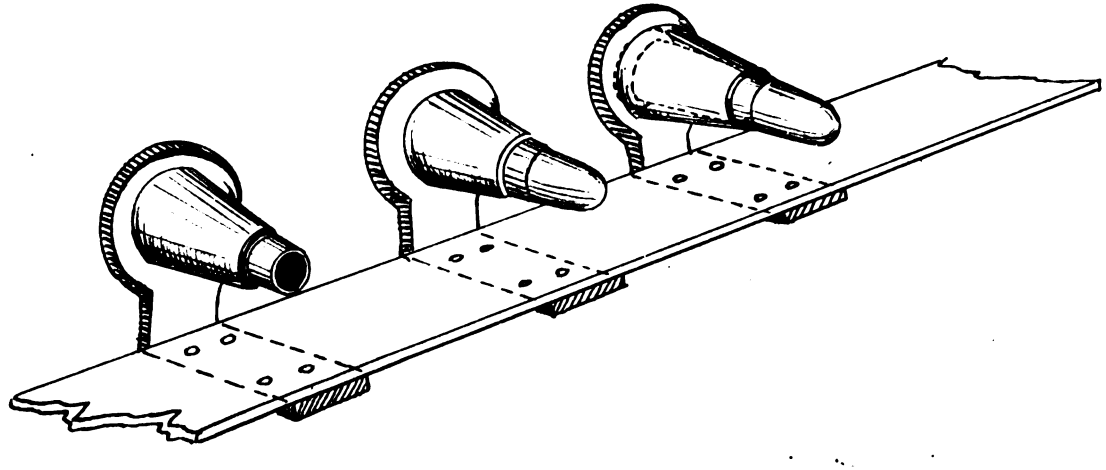

Gatling, having its barrels grouped around a central shaft, and ıdied in circular disks toward each end, in the same manner as the l-known machine-gun referred to. It is, however, very different from Gatling in its mechanism and mode of feeding and extraction.

'he piece presented for examination is small in size, being only in-ded as a preliminary model for the purpose of showing the working he system. The caliber is .32 inch.

'he mechanism will be best understood by reference to the accom-ıying figures.

Vhen the center-shaft (*a*) is turned, the barrels, while revolving und this axis, also move backward and forward in a longitudinal ɔction by virtue of their engagement with an inclined flange or cam; y much in the same way as a similar motion is communicated to the ɛs of a Gatling. The barrels have, of course, sufficient play in their rings (*cc*) to admit of such motion, (and also of increase of diameter, ı to heating,) and they are turned cylindrically for the length of their vel. In the figures , the upper barrel is not the firing-point, and cartridge-shell is completely extracted from the one just below the ı of the central shaft.

'he plate turns with the system and carries the firing-pins near its iphery, one being opposite the rear of each barrel. Every alternate , as it arrives at the firing-point, ×, Fig. 1, is struck by one of two ɛ-plungers, secured into a single box, which is inserted into the ech-cover in rear of and in a prolongation of the axis of the barrel, ich may be at the firing-point. This constitutes the only lock in the ı. A rough sketch of these lock-plungers is here given, and will ficiently explain their mode of action. (Fig. 2.)

'hey consist of two flat pieces of steel, with shanks on the rear ends. ɔse shanks serve as guides to the spiral springs which drive the ngers forward when the studs *a a* are alternately released from their tact with the flanges of the cam-cylinder *b b*, Fig. 5, (appended.)

'he cam-cylinder is a simple and strong barrel, (Fig. 5, *b b*,) firmly ured to the center-shaft, just in rear of the diaphragm *c*. It carries its surface two separate sets of "sections of screw-threads," having a ck pitch. Each set of threads (or cam-flanges) as brought around the revolutions of the central shaft engage successively with the ds on its lock-plunger, each set of flanges always working its own nger.

As the cam-cylinder travels around, the flange that is engaged with stud of a lock-plunger forces it back, until (the end of the flange ng reached) the stud is released, and, actuated by its spiral spring, the nger is driven forward against the firing-pin.

'he plungers are seen from the side in the figure, (5, *a a*,) and the nner in which they are alternately released and drawn back by the ion of the flanges on the revolving cam-cylinder will be apparent.

As each plunger is being drawn back, (after striking,) the motion of center-shaft brings around another barrel, and presents it with its ng-pin in position to be struck by the *other* plunger as soon as this ɛr is released.

'he plan for feed of cartridges and extraction of shells is novel. ıured on the central shaft, just forward of the firing-pin plate, and ide of the circle formed by the rear ends of the barrels, is a cylinder wrought iron, having its surface indented by recesses, the general ɔction of which is parallel to the axis of the center-shaft.

'hese indentations are intended to engage with flat pieces of brass of ıilar shape which are riveted to the under side of a leather belt, the

pitch being made the same as that of the indentations on the cylinder. It is evident that if the first of these flat pieces be engaged with an indentation on the cylinder and the center-shaft be turned from left to right, the belt will pass over the upper side of the cylinder in the same direction. (Fig. 5, *d*.) In short, the belt is a kind of flexible rack, running over and actuated by a pinion.

Forming one with the rear end of each tooth on the belt, and standing up at right angles to its surface, is a brass socket for the reception of metallic cartridges. (Figs. 4 and 5.) The pitch of the gearing thus far described is such that the distance between successive axes of the metallic cartridges (when placed in these sockets) will be just equal to that between the axes of successive barrels of the gun.

The sockets are conical on the exterior, and are bored through to receive the metallic cartridge, which is pushed in from the rear, the flange of the cartridge fitting into a recess cut into the rear face of the socket. A small portion of the cartridge-case and the whole of the bullet project beyond the forward end of the conical socket. (Figs. 4 and 5.) When the cartridges have been placed in the sockets, the former stand with their axes parallel to the upper surface of the belt, and perpendicular to the direction of its length, on the loading (or left) side of the gun. This places them in prolongation of the axes of the barrels and just to the rear of the latter.

The rear ends of the gun-barrels are bored conically to fit neatly over the belt-sockets *e*, Fig. 5.

As the center-shaft is revolved, the belt, loaded with its cartridges, is drawn up and over the indented cylinder, a cartridge coming opposite the opening in the rear of each barrel in succession. The barrel-cam causes the barrels on the left or loading side of the piece to move to the rear, and as the gun revolves, each barrel in succession gradually covers its loaded socket. By the time any particular barrel has reached the highest position in the gun *e*, Fig. 5, it has received the corresponding socket and cartridge entirely within its breech, and the butt of the cartridge is backed up in rear by the firing-pin plate.

Everything being now in place and secure, one of the lock-plungers is released (by the lock-cam cylinder) and strikes the firing-pin, exploding the cartridge. This takes place, as before remarked, at the highest point that each barrel can reach in its revolution around the center-shaft. If the revolution of the center-shaft be continued the barrels will come successively to the firing-point, covering the sockets, and being struck by the alternate lock-plungers, as before described. So much for the loading and firing.

After the bullet has left the barrel, the latter is urged to the front by its cam, and, as the gun revolves, gradually uncovers the cartridge-socket, with the empty shell still remaining in it; when the socket is completely unmasked, (which occurs at a quarter revolution from the highest point, (Figs. 1 and 5,) the belt no longer follows the surface of the indented cylinder, but runs vertically down toward the ground, laden with its empty cartridge-shells still remaining in their sockets. Thus extraction is completed as far as the gun is concerned, it still requiring to be completed as far the belt is concerned, either by hand or by extracting and reloading machinery, which latter was not shown.

A belt can be made of almost any convenient length, and the head of one can be readily hooked to the end of that already working through the gun, thus keeping up the fire, I should think, without difficulty. The experiments in this direction were limited, as the exhibitor had but a few short belts, none holding over one hundred rounds.

Plate 3.

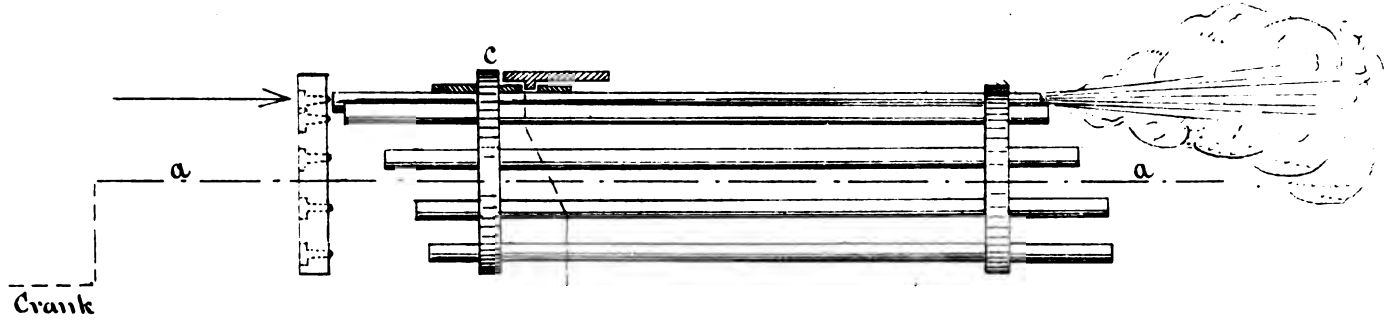

The belt is readily introduced into the gun on the left side, and the whole feeding and firing mechanism is concealed by bronze hinged covers when on ordinary service. By throwing these back, however, all the working parts become at once plainly presented to view. The crank cannot be turned backward while the breech-covers are down.

This gun is much more simple than the Gatling, having fewer parts, but it is not as simple as the Gardner gun, though it would seem not much more likely to get out of order than the latter. In this last respect both are superior to the Gatling.

The principal advantage of the Bailey over the Gatling gun consists in the simplicity of the lock mechanism. It does not seem probable that any amount of firing would injure the lock, and even if it were to break, it is but the work of a moment to insert another one.

The locks of the Gardner are simpler than those of the Bailey gun.

I do not think the play allowed the barrels in their disks would seriously affect the accuracy of fire, as far as the demands of ordinary service are concerned; but such an arrangement of course results in a system, as a whole, not quite as rigid as that of Gatling, but still quite strong enough.

Nearly the whole mechanism of both the Gardner and the Bailey is exposed to view on raising the breech-covers, and in this respect they are superior to the Gatling.

The feed and extraction are, however, the leading peculiarities of the Bailey gun. In these respects it is wholly different from any piece that has yet been presented at the Department for trial; and as far as the experiments were conducted here, both of the operations referred to seem to be effected with certainty. But the number of rounds fired (about 300 in all, never more than 100 at a time, and usually only 25) was of course wholly insufficient to base any decision upon regarding the primary point—*certainty of action.*

Mr. Bailey was allowed to fire as much as he desired, with the limited amount of belts he had, and I explained to him that no decision of value could be arrived at short of the expenditure of many thousand rounds; but not being prepared for extended firing, he did not desire to proceed any farther.

The test that was made for *rapidity* of fire was, however, truly astonishing, 100 rounds having been fired in about six seconds, the gun appearing to be almost in a continual blaze. The whole number ran off smoothly.

It would remain to be seen whether when using these belts any shrinkage (from wetting or otherwise) would so alter the "pitch" on the belt as to seriously derange the feed. The inventor told me that he had tried that experiment thoroughly, and had found that the shrinkage of leather was not sufficient to affect the smoothness of the feed. If the gun should ever be presented for regular test, this point, regarding *shrinkage* or *stretch* of the leather belt, would require to be thoroughly tested.

There was no mechanism shown for removing empty shells and inserting fresh cartridges in the belts. This operation of course must be performed, probably at the caisson, though there would be no difficulty in carrying several thousand rounds in belts. The belts look somewhat expensive, but when made by machinery could be produced cheaply no doubt.

The particular piece under examination was not manufactured by a regular gun-maker, and consequently did not work smoothly in all its parts; but that imperfection is of course easily remedied. As regards

simplicity of mechanism, this gun stands between the Gatling and the Gardner; and if the feed should prove to be certain in its action, (and I have no evidence that it will not,) the gun would hold that position in all respects.

I am, sir, your obedient servant,

MONTG. SICARD,
Commander, and Inspector of Ordnance.

Commodore T. H. PATTERSON,
Commandant.

NAVAL EXPERIMENTAL BATTERY,
Annapolis, Md., October 3, 1876.

SIR: In obedience to orders of the Bureau of Ordnance, dated September 30, 1876, convening a board to witness the trial of the Lowell battery gun, the board met at this place at 10 a. m., October 3, 1876. In addition to the board there were present, Col. J. G. Benton, Army Ordnance; Captain W. N. Jeffers, Chief of Bureau Navy Ordnance, and Lieut.-Commander F. Pearson, United States Navy, also several officers from the Naval Academy.

The gun was first inspected, its working-parts and mechanism being fully explained by Mr. Farrington, its inventor.

In view of the elaborate report on this gun, made by Commander Sicard in February last, we do not think it necessary to describe all its details, except where we find essential changes have been made.

There have been two new features introduced since last reported on; these are, first, the method of feeding the cartridges, and second, a new lock, firing by direct *pressure*, instead of *striking* the base of the cartridge, as in the usual method.

We will proceed to describe these features in detail. The "feeder" (see Fig. 1) consists of a nearly square iron tube, firmly set in a socket directly over the "carrier-rolls." It stands upright, and can be removed if necessary by loosening a set-screw at its lower end. This tube or feeder is sufficiently high to hold thirty cartridges, the number contained in two of the paper cases, hereafter described. It has a slot in its forward side extending its whole length, of a width slightly greater than the diameter of the cartridge. It also has on its interior, and opposite each other, two narrow longitudinal grooves of a width and length slightly greater than the flange of the base of the cartridge. This tube is open, and slightly trumpet-shaped at its top to facilitate the introduction of the cartridge. If one or more cartridges be introduced into the "feeder," with the flange of the cartridge entered into the parallel grooves, it will of its own accord drop to the bottom, preserving its original horizontal position through its whole descent, passing out of the feed-case at its bottom and entering the "carrier-rolls" in the proper position to be entered into the barrel by the advancing lock-plunger. Fig. 1 shows roughly this feed-case with a cartridge at the bottom. In the socket which holds the feeder is a "stop," (A, Fig. 1) with a milled head, normally held back by a spiral spring, that allows the cartridge to fall. Whenever the operator wishes to cut off the feed, he pushes in this "stop," turning it slightly to the left, it being held in that position by a small pin (B) entering a slot.

The cartridges were supplied in paper cases, each case containing fifteen cartridges. Figures 2 and 3 show the cases, empty and filled. The case is made to hold the cartridges in a single row, each cartridge bar-

FIG. 1.

Feeder.

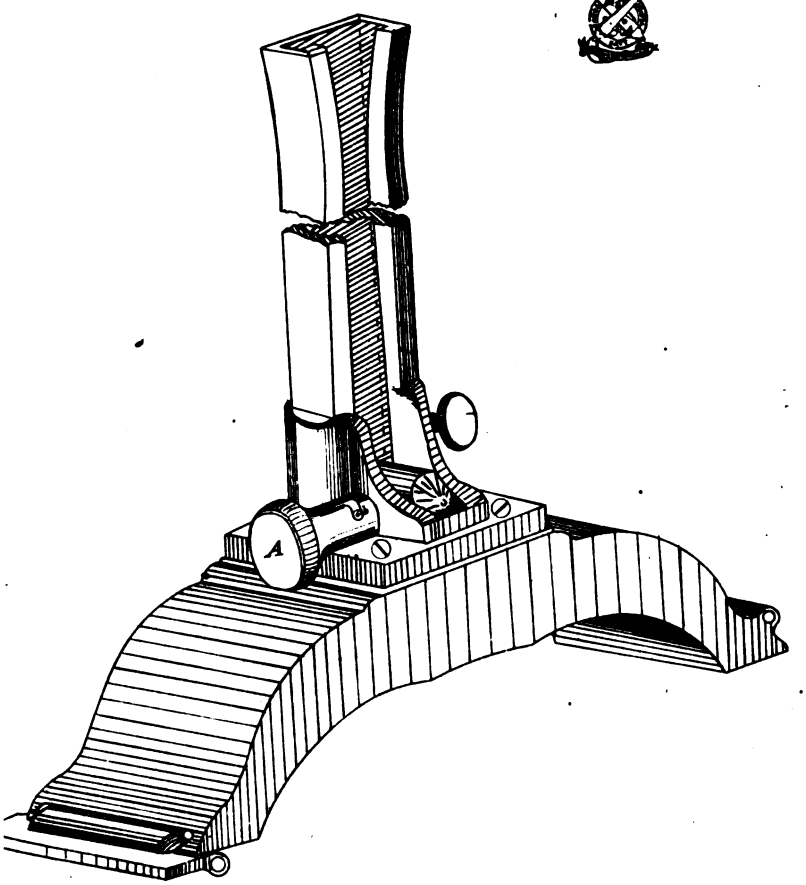

FIG. 2.

Cartridge Case, full.

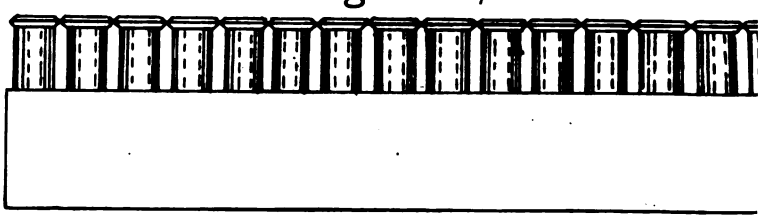

FIG. 3.

Empty.

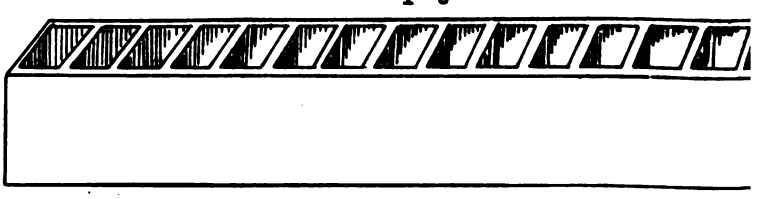

ing a compartment to itself; the bullet and about one third the shell being entered in the paper case, so that the latter, when filled with cartridges, holds them firmly with their bases and flanges in the same plane; the whole fifteen cartridges being readily entered into the "feeder"; this being done, the cartridges being held by the flanges entering the two parallel grooves, already mentioned, the paper case is pulled away, leaving the cartridges free to descend to the "carrier-rolls."

As the paper cases are prepared and filled with cartridges at the factory, the ammunition goes to the gun ready for use without any other preparation, doing away with the operation of filling feed-cases previous to using the gun; and, in fact, doing away with the shifting feed-case altogether. The paper case is also a neat and secure way of packing the cartridges for general transportation, and being inexpensive, is thrown away as soon as the cartridges it contained are placed in the permanent feed-case or "feeder."

The pressure-lock is shown in figure 4, and was used during a portion of the trial.

The firing by pressure is based on the fact that, in manufacturing the cartridges, a certain amount of pressure is always applied to the fulminate sufficient to explode about one in twenty. This is done to make the cartridges sufficiently delicate (consistent with safety) to insure explosion. If this pressure should be increased to a known point, instead of one in twenty exploding, they would all do so. This is, in reality, what is done by the pressure-lock, the firing-pin exerting a *pressure*, instead of *striking* a *blow*, doing away with the necessity of the usual spiral spring. The one used in this trial did not operate with as much certainty as the percussion-lock; but it being an "after-thought," as regards this gun, some of its parts, particularly the lug which receives the pressure from the cam, are not as strong as they otherwise would be. Five hundred and fifty rounds were fired with it, fifteen of which failed. The small spiral spring on the firing-pin is to keep it always back, clear of the face of the lock-plunger. While using the pressure-lock, this spiral spring was removed; the cartridge itself pushing back the firing-pin, as it was carried down by the rolls. This was done at the suggestion of Mr. Farrington, who stated that the spring was not at all necessary, and that the firing-pin could easily be arranged to withdraw to the rear by a positive motion.

The double extractor used in this gun, (C, Fig. 4,) locked by a positive movement of the shoulder on the plunger A, Fig. 4, not depending on its own stiffness or spring, is a very valuable feature; in fact, next to the feed, we may say its *most* valuable feature. For after all, what is a machine-gun but feeding, firing, and extracting? These three operations, working as they do in this gun with an almost absolute certainty, leave little to be desired. The cartridge being grasped on both sides by the double-extractors, slightly above its horizontal diameter, allows it to be readily removed from them by the "carrier-rolls," which *positively* carry the empty shell down—it not depending at all upon gravity until it is clear of the gun.

The following is a record of the firing:

	Time.	Number cartridges fired.	Number miss-fires.	Remarks.
	h. m. s.			
Commenced firing, two laborers working gun.	10 40 00	150	2	Miss-fires probably due to cartidg the caps were pierced.
Shifted barrels	10 42 00	.....	.....	
Fired for rapidity; spring-lock used, but the crank was not turned as fast as it might.	2 3	500	0	Gun worked smoothly, extracting The last cartridge jammed, bu cleared and extracted by forcing c No delay.
Fired for rapidity, Lieutenant Commander Pearson at crank, Gunner Walsh feeding.	53	300	0	Worked smoothly; barrel hot enou scorch, but not to light paper.
Cleaned parts with alcohol	.....	.....	.....	
Laborers turning crank for rapidity	54	300	0	Worked well; no jamming.
Laborers took the mechanism apart and cleaned it.	30	.....	....	No difficulty.
Commenced firing for endurance, and to see if heating would affect the parts; spring lock used, laborers turning, Gunner Walsh feeding.	11 23 10	375	.....	
Shifted barrels	11 24 32	390	....	Worked smoothly; delay 5 seconds
Shifted barrels and changed elevation	11 26 59	.....	.....	Delay 15 seconds.
Shifted barrels	11 28 40	360	.....	Delay 5 seconds; working smoothl
Shifted barrels	11 29 50	375	....	Delay 4 seconds.
Shifted barrels and resighted	11 30 59	315	.....	Delay 40 seconds.
Finished	11 31 40	285	.....	Results: Continuous firing of 2,100 in 8 minutes 30 seconds, counti delays; no particular rapidity de
Recommenced, after cleaning the parts and barrels. The object being to see whether the firing of a number of shots would foul or heat sufficiently to affect action.	11 52 53	375	Miss-fires not stated, but due to the cartridges—not more than 10.	
Shifted barrels	11 54 08	.....		Delay 6 seconds.
Feed delayed at	11 55 06	.....		Feed went on after forcing a lit crank, probably due to a bad delay 10 seconds.
Shifted barrels and changed elevation	11 55 38	375		Delay 20 seconds.
Shifted barrels	11 57 00	1,350		Delay 4 seconds.
Shifted barrels	11 58 10			Delay 10 seconds.
Shifted barrels	11 59 25			Delay 6 seconds.
Stopped to cool, and to see whether the cold residuum would interfere with firing.	12 00 00			In firing, the elevation was notic increase gradually, but this was due to the sinking of the leg of tl pod in the ground.
Recommenced without cleaning; same lock, (spring.) Maximum depression about 35°.	12 7 30	300		The firing-barrel was found to b enough to char paper; the next l to come into action could allo hand to touch it without burning
Jammed	12 8 10	.....		Opened case and found shell (marke 1) jammed; backed crank and t out.
Started again	12 9 30	1,200		
Shifted barrel	12 9 50	*		Delay 1 minute.
Shifted barrel	12 11 53	.....		Delay 37 seconds.
Shifted barrel	12 13 45	.....		Delay 19 seconds.
Shifted barrel	12 15 20	.....		Delay 15 seconds.
				The barrels seemed to shift badly, was found that if the crank was right place the shifting gear would as at first.
A shell burst in carrier-rolls	12 16 4	.....		This was a hang-fire, and the sh marked No. 2. It was necessa back the crank and pick the shell the flutes after removing lock an roll, which was easily done.
Ready to start	12 17 02	600		Six hundred shots were fired th last barrel. It was hot enough to ily light paper; but the shifting worked easily.
Started again	12 18 00			
Stopped	12 20 00			
Tried the traversing gear	1 15 00	300	0	Worked very well, dispersing the evenly. The handle to alter th persion accomplished its object.
Tried pressure lock without the spring	1 55 00	30	0	Fired slowly, and worked well.

n and Spring.

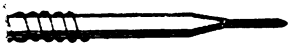

Plunger.

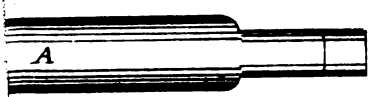

FIG 5

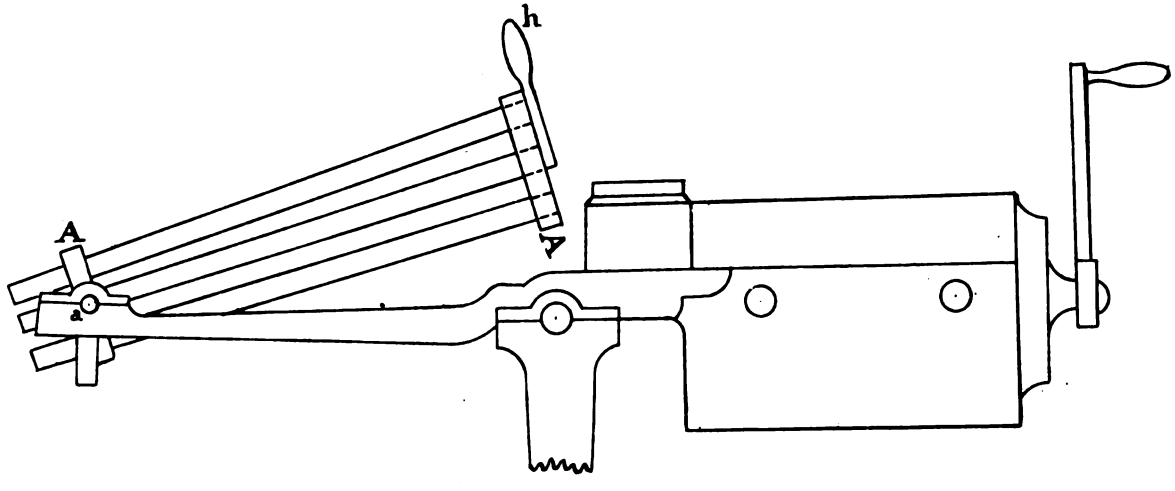

	Time.	Number cartridges fired.	Number misfires.	Remarks.
	h. m. s.			
mmenced rapid firing with same	1 57 32	180	16 misfires in 600	
nmed	1 58 00	.....		Shell marked No. 3 had burst in the rolls—probably a hang-fire; a portion of the shell and the bullet were left in the gun. The firing might have gone on in 40 seconds, but the parts were taken out of the barrel with little difficulty.
ommenced	2 1 30	420		
amed	2 20			Went ahead after a little forcing on the crank.
in spring-lock, having cleaned the echanism; (this cleaning was done ith alcohol and a rag.)	2 8 10	.....	.....	
fted barrels	2 9 20	450	.....	Delay 7 seconds.
fted barrels	2 11 15	450	.....	Delay 6 seconds.
pped	2 14 40	495	.....	
Total	.....	9,875		

Nine thousand eight hundred and seventy-five rounds were fired altoether during the day, the crank being worked and the cartridges fed y two colored laborers who had never seen the gun until brought to ie battery. They also readily dissected the gun—removing the three arts, lock and two carrier-rolls, the only parts liable to any derangenent, or that mght require cleaning.

In order to test the working of the feed when firing at a depression, he gun was depressed 35°, in which position twenty one hundred rounds were fired, the feed working as well as when fired level.

Two cases of hang-fires occurred, the cartridges exploding after or while being extracted; but being still inclosed in the "flutes" of the strong "carrier-rolls," no damage was done to the mechanism. In one of these cases the bullet remained in the barrel, but the barrels being lifted into the position shown in Fig. 5, it was readily backed out with an ordinary cleaning-rod. The firing could have been continued by shifting to another barrel, without attempting to remove this bullet, though it was removed in forty seconds. These cases of hang-fire being probably the result of defective cartridges, and not due to the gun, are only noticed to show the advantage of the "carrier-rolls;" they being made of steel are not easily injured, even by a cartridge exploding between them.

In the afternoon the gun was removed from the butt to a point near he bay, and two hundred rounds were fired over the water, the object eing to show the effect of the fire when using the traversing-gear, which is fully illustrated and described in Commander Sicard's report, ig. 10.) We recommend the traversing-gear to be so arranged as to ive a greater spread to the fire, which it will be seen, by reference to he illustration in Commander Sicard's report, Fig. 10, can be readily one without at all altering its design.

It is the perfection of a traversing-gear, because the amount of traverse an be regulated from nothing up to the full amount permitted; so that he person operating the gun can spread or reduce the space covered y his fire, according as the object approaches or recedes, increases or iminishes its front, without stopping the fire. As now arranged, the hrow of the traverse is only three eighths of an inch, which gives but O feet dispersion in a thousand yards.

In Commander Sicard's report, it is noticed that the heating of the firing barrel caused it to jam by expanding against the rear bearing. In the present trial this is obviated by allowing a play of three-sixteenths of an inch in the forward bearing, permitting the barrels as heated to expand forward.

After rapidly fixing six hundred rounds from one barrel, it was heated sufficiently to light paper; but it gave no trouble in shifting barrels.

The following principal points were particularly noticed:

1st. *Feed.*—This comprises the feeding-tube and carrier-rolls; the former keeping each cartridge horizontal till it is received by the latter, the carrier-roll. They are certainly an important addition to the mechanism of a machine-gun; preventing the cartridges from accumulating before the lock, bringing the cartridge in line with the firing barrel, receiving the empty shell as it is withdrawn, and carrying it down clear of the gun; in other words, it receives and takes charge of each and every cartridge in succession from the moment it drops into the flutes until it is fixed and extracted; all its movements being exposed, and acting with certainty.

2d. *Extraction.*—The double extractor, grasping as it does the butt of the cartridge on both sides, works with very great certainty. This certainty is not only due to the fact of the extractors not depending on their spring or elasticity, but to a positive movement being given to their hooks by a shoulder on the lock-plunger, working on the curved portion of their rear ends. Thus the extracting-hooks are obliged to retain hold of the flange of the cartridge until entirely extracted, when the empty shell is readily removed from the hooks by the carrier-rolls, as already explained.

3d. *Lock-mechanism.*—The general working of the spring-lock is similar to those used in the Gatling gun, but is much more accessible; being readily removed, if necessary, in a few seconds. We do not see any particular advantage, if any, in the working of the pressure-lock over the percussion-lock.

4th. *Accessibility of parts.*—The working parts being exposed by simply turning back their cover, allows the mechanism to be at once seen and readily removed, and in this respect is as simple as the Gardner gun, and far more so than the Gatling gun; and, whenever a stoppage may occur, its cause is *immediately seen*, and easily remedied. This feature of this gun is to be highly recommended.

5th. *Accuracy of fire.*—The gun during this trial not being tested for accuracy, we cannot say that it is either inferior or superior in this respect to other machine-guns. But as it fires all its shots from one barrel at a time, it would not appear to be liable to the irregularity of accuracy, which might occur were any of its barrels thrown out of line.

6th. *Fouling.*—Four thousand two hundred rounds were fired without cleaning, an interval of fifteen minutes being allowed to elapse, after two thousand one hundred rounds were fired, before the firing was resumed; sufficient time to allow the barrel and working parts to cool, and thus harden any residuum that had collected. The gun worked as well apparently, firing with the same regularity and rapidity as when clean, up to the end of this trial.

7th. *Loss-motion at firing-point to allow for hang-fires*—This is a point of considerable importance. The shape of the cam which operates the lock is such, that after the plunger has shoved the cartridge into the barrel, and it has been fired, it continues to be supported in rear by the cam during a portion of its revolution. This is clearly shown in Commander Sicard's report, (Figs. 3 and 4.) This arrangement is of great

FIG. 10.

The Saddle traversing and the Gun steady.

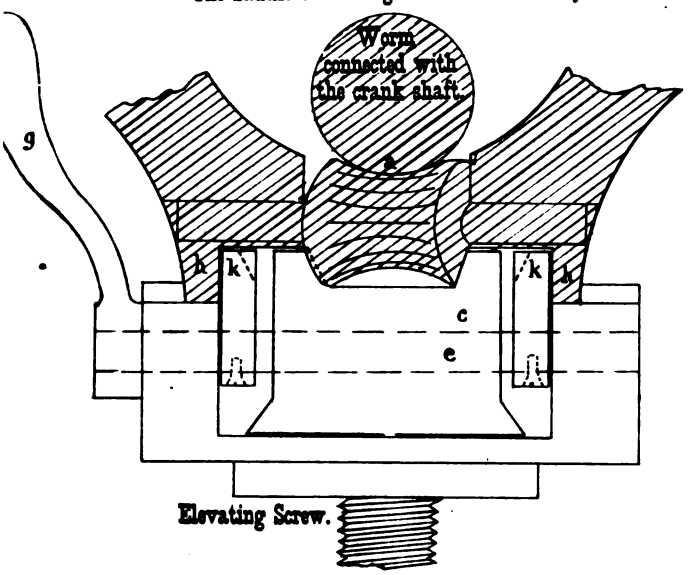

FIG. 9.

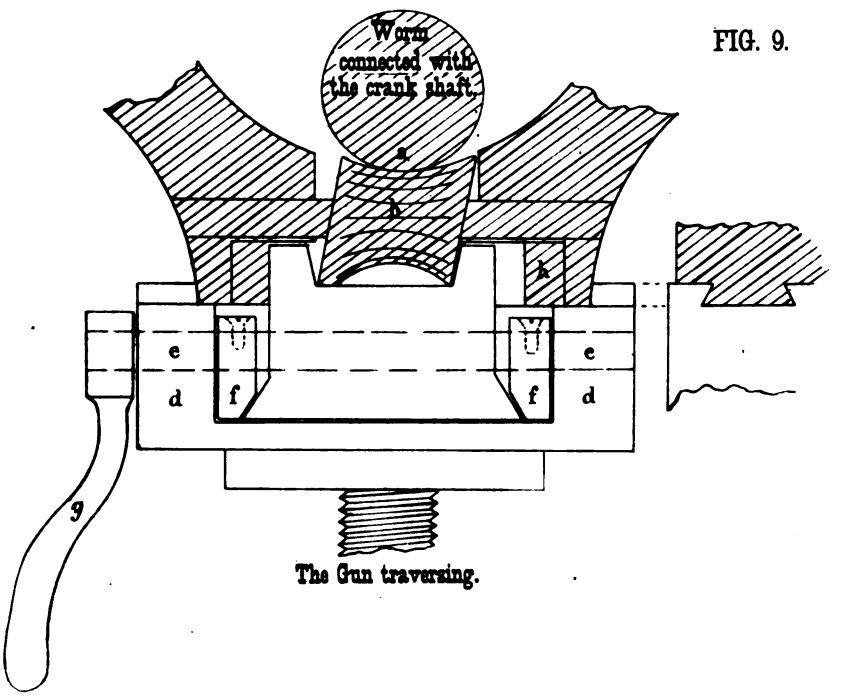

The Gun traversing.

XI in. S. B. GUN, CONVERTED INTO AN 8 in. M. L. RIFLE.

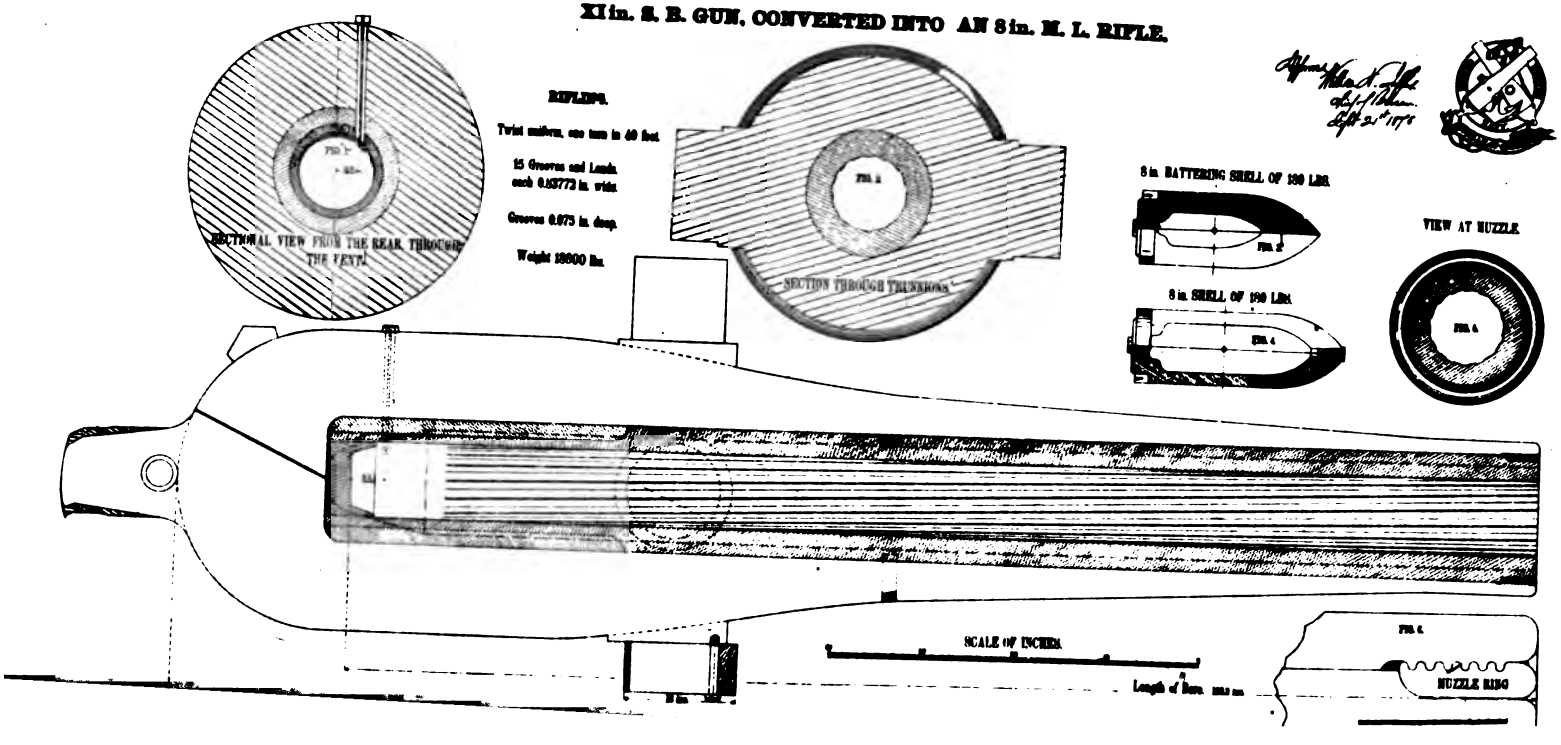

value to a machine-gun, where the cartridges are entered and extracted from the barrel with such rapidity that hang-fires are liable to occur.

8th. *Rapidity of fire.*—This gun, firing as it does all its shots from one barrel at a time, compares in this respect very favorably, indeed, with any machine-gun. Twice during this trial three hundred shots were fired considerably within a minute, the actual time being fifty-three and fifty-four seconds, respectively. It is proposed by the inventor to construct a gun with double the number of barrels, making eight, (two less than the Gatling gun,) with two locks, so that a fire of four or five hundred shots a minute can be steadily maintained without being obliged to give a too rapid motion to the crank.

The question of rapidity of fire being well established for all well-known machine-guns, we think the points to which attention should now be given in the trial of a machine-gun are simplicity of mechanism, liability to get out of order, and accessibility of parts. In these are included the feed and extracting, also durability. We think these points have been more highly developed in the Lowell Battery Gun, and its mechanism brought to a nearer state of perfection, than in any other machine-gun with which we are acquainted.

The shells which are referred to in the "record of firing," and one of the proposed cartridge cases, are respectfully forwarded herewith for the information of the bureau.

Very respectfully, your obedient servants,

A. S. CROWNINSHIELD,
Lieutenant-Commander, U. S. N.
EDWARD W. VERY,
Lieutenant, U. S. N.
B. H. BUCKINGHAM,
Lieutenant, U. S. N.

Captain WILLIAM N. JEFFERS,
Chief of Bureau of Ordnance, Navy Department.

Manufacture of wrought-iron tubes for the conversion of XI-*inch Dahlgren guns into* 8-*inch muzzle-loading rifles, and the* 100-*pounder Parrott rifle into a breech-loading rifle tubed with wrought-iron.*

By Commander F. J. HIGGINSON, *Inspector of Ordnance.*

The iron for the tubes is obtained from the Ulster Iron Works, at Saugerties, N. Y., and is made from the best American pig-iron, selected from magnetic and hematite ores taken from the mines of New Jersey and Lake Champlain.

Four different kinds of pig-iron are mixed in the puddling-furnace.

The puddled balls are first passed under a trip hammer, where the slag is removed and the ball formed into a bloom.

This operation is very carefully watched, and balls showing signs of any inherent weakness or want of proper puddling are rejected.

The blooms are rolled into slabs, then cut into short pieces, piled, raised to a welding heat, and again rolled into slabs. This process is repeated three times, great care being taken at each piling to preserve the direction of the grain, or fiber, of the iron.

The last pile from which the bar is finally rolled is composed of 17 slabs, 51 inches long and 7 inches wide; the top and bottom slabs are each ¾ of an inch thick, and the intermediate ones ½ an inch.

This pile is placed in an anthracite furnace, raised to a welding heat, and passed through a succession of rollers of gradually diminishing dimensions until it is finally rolled into the bar required for making the tube.

This bar is 18 feet long, and tapers from 4 inches on the outside to 3¼ inches on the inside, and is 3½ inches thick.

When this bar is subsequently rolled into a coil, the inside next to the shaft, 3¼ inches, expands and the outside contracts, making it 3¼ inches square.

The slabs in this bar stand vertical in the direction of its length, and in the subsequent coil-welding, which takes place on the side of the bar and against the flat of the slabs, they are drawn more solidly together.

The iron of these bars breaks at a tensile strain of 50,000 pounds to the square inch, and presents, when fractured, a bright fibrous appearance, indicating great tenacity of character.

The operation of making a tube is divided into three parts, viz: rolling, coil-welding, tube-welding.

ROLLING.

The bar to be rolled into a coil is 36 feet long, two of the original bars being welded together with a tongue-weld.

This bar is placed in a long furnace and heated by a blast to a good red heat, it is then drawn out and rolled around a shaft 6½ inches in diameter, and slightly tapering at one end.

The shaft with the coil upon it is then lifted by a crane from its bearings, and the coil slipped off the tapering end; it is received upon a flat iron plate, where it is allowed to cool without losing its alignment.

COIL WELDING.

The coil to be welded is placed on the end of a long porter-bar, having a movable balance-weight on the other end, and laid horizontally in a reverberatory furnace. When the coil arrives at a red heat it is taken out of the furnace on the porter-bar, and shoved into an iron pipe which is canted on its side to receive it; this pipe is made of strong cast iron four (4) inches thick, four (4) feet long, and with an interior diameter of fourteen (14) inches; the pipe with the coil inside is then drawn vertically under an 8-ton steam-hammer and given a few light blows to force the coil firmly together; it is then replaced in the furnace, and when raised to a welding heat is again placed in the pipe under the hammer and receives seven or eight welding blows; this welding process is repeated, after which the coil is allowed to cool.

This process is considered the most important of the whole operation, as any impurities lodging between the folds of the coil before they are closed, or too great a loss of welding heat between the furnace and the hammer, will prevent a perfect welding of the coil.

The use of a pipe for coil welding is different from the method pursued in England and is thought to be superior.

TUBE WELDING.

The welded coils are first bored out sufficiently to detect any flaws, and their ends faced and reciprocally recessed for shrinking together.

The projection or shoulder is slightly longer than the depth of the

recess, so that when the coils are pressed together in the furnace the first welding will take place in the interior; the recess is expanded and shrunk over the shoulder, thus holding the two coils together while being placed in the furnace; the joint is then placed in a reverberatory furnace eighteen (18) inches wide and five feet long, having in the center a door on each side through which the ends of the coils project, and the blast falls only on the joint.

A cross-head supported by two iron bars is placed against one of the projecting ends, while a screw-press of one hundred tons is brought to bear on the other end.

As the joint arrives at a welding heat, the press is screwed up and the coils driven into each other.

Two coils united form a section, and two sections similarly united form a tube.

When judged sufficiently united, the section is withdrawn from the furnace and the bulging around the joint straightened under the hammer.

The welded tube is then bored out to within one-tenth of its final diameter and a cut is taken off the outside.

It is then carefully inspected, and subjected to a water-pressure of one hundred and forty (140) pounds.

After inspection the tube is put in the turning-lathe and turned down at the breech to receive the B tube.

The B tube is made from a welded wrought-iron coil, constructed in the manner already described, and thirty-two (32) inches long and one and seventy-five hundredths (1″.75) inches thick; it is shrunk over the breech end of the main or A tube with a shrinkage of 0″.003, the A tube having previously been turned down (1″.75) to receive it. Around this reduced portion of the A tube a spiral groove or gas-escape 0″.05 deep and 0″.1 wide is cut, which communicates with a small hole bored through the breech when the tube is in position in the gun.

This arrangement of the B tube and gas-escape is a safety measure, the intention being that any fracture of the A tube underneath the B tube sufficient to allow the escape of gas into the groove will immediately be indicated at the breech of the gun, and give timely warning of the danger within.

A screw-plug, 5″.5, closes the breech-end of the tube and forms the bottom of the bore.

The tube is next taken to the rifling-machine and rifled on the following dimensions, viz:

Twist, uniform; one turn in forty (40) feet, 15 lands and grooves, each 0″.83776 wide; grooves, 0″.075 deep.

Rifling commences 10″ from bottom of bore.

After rifling, the tube is fine-turned to fit the gun.

The dimensions of the finished tube are as follows, viz:

Length = 131″.2; thickness, 2″.75.

Length of bore = 128″.2.

Diameter of bore = 8″.

The XI-inch gun into which this was fitted was first bored out to a diameter of of 13″.5, and a thread for the screw-collar cut around the muzzle.

To this cast-iron casing the tube is fitted, using points and horseshoe gauges. The play should not exceed 0″.007 at the breech, nor 0″.015 at the muzzle.

A small threefold purchase was used to haul the tube into the casing. It is secured in the muzzle between the tube and the casing.

A small pin, or steadying-plug, is secured through the casing and into the tube on the side just forward of the trunnions, to prevent the tube from turning.

As the preponderance of the guns was changed after conversion from plus to minus at the base-ring, the axis of the trunnions was carried forward 1″.5, by first turning them down eccentrically and then fitting on a composition sleeve.

The present preponderance is plus 300 pounds at the base-ring, and the weight of the converted gun is 17,330 pounds.

As the converted guns are to be fired with friction primers, the lock masses have been removed; the vent-piece, which is of copper 1″ in diameter, is screwed in through the casing and tube, and has a nut and shoulder on the upper end.

Proof-firing.—The guns when finished were subjected to a proof-firing of ten (10) rounds; five (5) of these rounds were with 20 pounds of hexagonal powder, and five (5) with 35 pounds—the shot in each case weighing 180 pounds.

The expansion of the wrought-iron tubes during proof may be seen from the following table.

The point taken in each gun is 118 inches from the muzzle and about the center of the cartridge when in the gun.

The play of the tubes has been deducted:

No. of gun.	Enlargement.	No. of gun.	Enlargement.
165—1	0″.016	171— 7	0″.021
166—2	0″.027	172— 8	0″.016
167—3	0″.014	173— 9	0″.021
168—4	0″.019	174—10	0″.021
169—5	0″.018	181—11	0″.019
170—6	0″.017	Average enlargement	0″.019

The enlargement in the powder-chamber gradually diminishes toward the muzzle, and at distance 68″ from it no appreciable expansion can be found. Where the expanding-ring takes the grooves, the expansion suddenly increases for two or three inches, and then as suddenly decreases. This occurs at a distance of 100″ from the muzzle, or 28″ from the bottom of the bore.

As the 35-pound cartridge occupies 24″ from the bottom, and the shot when home is placed close against it, inference seems to be that the shot has a forward movement of 4″ before the ring takes the grooves; with a 20-pound charge it would be somewhat more.

The velocities obtained during proof with Benton's thread velocimeter were as follows, viz:

Charge of powder.	Number of fires.	Average initial velocity.
20 pounds.	16	1,200.0 feet.
35 pounds.	23	1,466.7 feet.

The velocities were taken at a distance of 175″ from the muzzle of the gun, and with 1° depression.

The following table will show the pressure during proof, viz:

Charge.	Number of fires.	Average initial pressure.
20 pounds.	13	20.746
35 pounds.	14	30.080

As the shot were fired in a butt, no ranges were obtained.

No flaws or imperfections of any kind were developed during proof.

Considering that these eleven tubes manufactured for the Navy were the first of the kind ever made in this country, the success of the attempt is assuring; more particularly as it is stated in an English work

n of **100 Pdr. P**

By the insertio

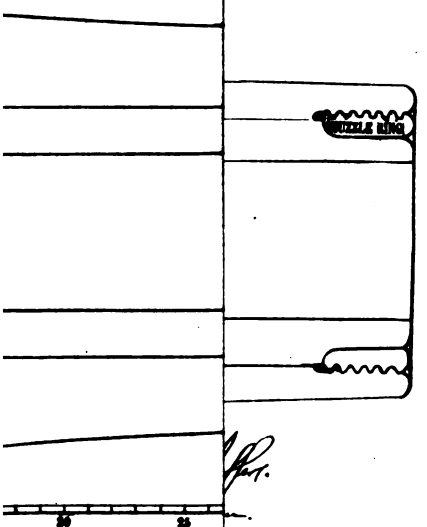

;he difficulty of obtaining a perfect coiled tube was at one time so hat two out of every three were rejected."

ersion of the 100-pounder Parrott rifle into a breech-loader.—The of the rifle to be converted was first cut off at a distance of 1″ ıe base ring and the bore enlarged to receive a wrought-iron tube, d from the rear.

gun was bored out to a diameter of 11″.75 from the breech to the ›ns, and to a diameter of 10″.4 from the trunnions to the muzzle, ger diameter at the breech corresponding to a greater thickness tube in that portion.

rew-thread for a collar was cut in the cast iron, both at the breech the muzzle.

band was not removed and remains the same as in the old gun.

wrought-iron tube fitted to this casing was made of five welded ›nstructed and united together in the same manner as those for ıch muzzle-loading rifle.

two breech or reinforce coils of the tube were made with 3¼″ bar- ınd the other three coils with 2¾″ bar-iron, and they were all on a shaft 5½″ in diameter; where the re-inforce portion of the ɜases, a shoulder is rounded off to fit the casing.

welded tube after having been bored out to its final diameter, was put in the lathe and turned down as nearly as possible to ne diameter as the bore of the casing.

tube, when finished, has the following dimensions, viz :

.....	139″
of re-inforce	45″.5
of screw-box	10″.2
ıss of re-inforce	2″.675
ıss of tube from re-inforce to muzzle	2″
›r of bore	6″.4
of bore	128″.7

ırning the tube to fit the casing the muzzle-end was given a slight to facilitate its entry; the gun and tube were then placed in a iron frame, which consisted of two cross-heads connected together › heavy iron side-rods.

muzzle of the gun was placed against one cross-head and the ›rced in from the rear by two 30-ton hydraulic jacks supported by against the other cross-head; after the tube had been forced by the jacks, a collar 3¼″ wide was secured in at the breech, be- the tube and the casing, and similar one at the muzzle.

gun was then put in the turning-lathe and the breech-end of the ored and fitted to receive the breech-plug and Broadwell ring; it en taken to the rifling-machine and rifled on the following sys- iz:

ɜt uniform, one turn in 32 feet.

lve (12) lands and grooves, each 8.″83776 wide.

th of grooves, 0″.075.

apparatus for closing the breech of this gun is on the French sys- nd consists of a steel plug 9″ long and 0″.67 in diameter, around ·cumference of which is cut a screw-thread corresponding to the t around the screw-box in the tube; the plug and screw-box are ›cally slotted in three places, so that it can be shoved down to its gs by hand before engaging the threads.

ɜutting the slots on the plug, the outer thread is not cut through, revents the plug from entering beyond the point where the ls will take each other fairly.

On the inner face of the breech-plug a circular nose-plate is fi which is held in position by a central bolt which passes through a in the center of the plug, and is set up with a screw-nut which cessed into its outer surface.

This nose-plate is of steel, and bears tightly against the Broa ring when the breech-plug is ready for firing.

The vent passes through the center of the bolt holding the plate.

The inner surface of the nose-plate has been left flush, and a s piece of copper sewed to the bottom of the cartridge acts as a gas-c in firing.

On the outer end of the plug is screwed a bronze facing, which sists of two handles, a lever-arm and a movable vent-guard.

A bronze frame or bracket is hinged to the rear of the gun on right of the bore, and is so hung that when the breech-plug is dr from the gun it slides directly into this bearer, and is swung to right, leaving the bore clear for loading.

When the gun is loaded the bearer is swung toward the bore, bringing up suddenly against the gun, the breech-plug slides off the slots, and where it also brings up the lever-arm is turned 60° to right and caught with a spring.

The vent-guard is so arranged as to be closed by the action of lever-arm in unlocking, and remains closed until moved off by ha after the plug is again screwed up for firing.

The gun cannot be primed until this has been done.

Conversion of a 100-pounder Parrott rifle into a breech-loader on the Fr system.

The breech of the 100-pounder to be converted was cut off at the b ring, and the band removed by heating and expanding it in a chare fire.

The gun was then bored out for a distance of 58″.2 from the b ring, the diameter of the boring being 11″.75 for the first, 12″.5 8″.30 for the remaining distance.

Around the enlarged portion of the boring a coarse female screw five threads, was cut to correspond with a screw cut around the out of the re-inforce portion of the steel lining.

This screw is left-handed, so that the tendency of the rifle mo (right-handed) would be to tighten the tube.

The steel tube or lining fitted to this casing was made from an i of tough cast steel obtained from the Midvale Steel Works, Pen vania. When turned and bored as required, its dimensions we follows:

Length	5
Length of re-inforce	1
Thickness of re-inforce	
Thickness of tube forward of re-inforce	
Diameter of bore	
Diameter of screw-chamber	

A screw-thread is cut around the outside of the re-inforce portic the tube, which was turned to an exterior diameter 0″.001 greater the interior diameter of the casing.

To fit the tube into its casing, the latter was placed in a ver charcoal-furnace, with the muzzle down and the top of the furnace ng flush with the breech where it had been cut off, thus leaving bore clear for entering the tube.

heat circulated in the furnace around the outside of the casing, e tube was suspended from a crane over the bore.
›n the casing was sufficiently expanded the tube was lowered into re and screwed firmly into place.
old band which had been removed was increased from 27″ to 39″ ;th, bringing it forward to within 2″.75 of the rimbase.
new band was expanded in a charcoal fire and shrunk on the gun shrinkage of 0″.062.
gun was then put in the rifling-machine, and the rifling which ıed in the original bore was continued onto the tube.
rifling was on the following system:
t increased from zero to one turn in 19′ at muzzle.
al lands and grooves each 1″.2566 wide.

of bore	128″
of rifling	124″

breech-closing apparatus fitted to this gun is the French screw- ·ith central fire, the same as that fitted to the 100-pounder Par- fle converted into a breech-loader by the insertion of a wrought- be, with the addition of a lever, rack, and pinion, to give additional for opening and closing breech. This is done to show the sys- applied to heavy guns, but is not necessary for this caliber.
›ectfully submitted.

F. J. HIGGINSON,
Commander, and Inspector of Ordnance.

›tion of naval 3-inch breech-loading howitzers, with instructions for their use and care.

:LATURE FOR 3-INCH BREECH-LOADING HOWITZER OF 350 POUNDS.—PLATE II.

Gun.

eks.
ek-fillets.
›ch-face.
t cylinder.
t fillet.
›nd cylinder.
›nd fillet.
se.
ıbases.
nnions.
zle-face.
ating lug, (with slot, pin-hole, and in.)
r sight-bar.
14. Sight thumb-screw.
15. Trunnion-sight.
16. Cheek-hinge.
17. The screw-box, (or plug-nut.)
18. Breech-screw, (or nut-fillets.)
19. Breech-blanks.
20. Breech-slope.
21. Breech-face.
22. Powder-chamber.
23. Shot-chamber.
24. Centering-slope.
25. Compression-slope.
26. Bore.

Breech-mechanism.

collar.
ar-hinge.
ar-lands.
ar-grooves.
le-bolt masses.
ch-mass.
ch-mass.
› of collar.
nd of collar.
ar-guide.
ar-locking faces.
38. The breech-plug.
39. Slotted screw-threads.
40. Closing-blanks.
41. Locking-blank.
42. Plug-locking faces.
43. Guide-bolt slots.
44. Latch-slot.
45. Plug-flange.
46. Flange-rim.
47. The hollow.
48. The hand-gripe.

49. The lever.
50. The handle.
51. The nipple.
52. The catch, (or snap,) consisting of— { loop, *a*. nose, *b*. shank, *c*.
53. The latch, consisting of— { nose, *a*. tail, *b*. shank, *c*. head, *d*.
54. Nose-plate; one for metallic ca one for serge-bag.
55. Nose-plate recess
56. Nose-plate boss.
57. Boss-recess.
58. Nose-plate screws.
59. Vent-check, (with guide-screw
60. Guide-bolt, (for collar.)

Broadwell ring.—Full size.

61. Ring-face.
62. Flange.
63. Curve.
64. Crown.
65. Front.
66. Nose-plate flange.
67. Ring-grooves.

GENERAL DESCRIPTION.

For some time experiments have been going on with a view introduction of breech-loading rifled boat-howitzers into the Nav it is thought that the armament described in the following pag be found suitable for the purpose in view.

Two sizes of the 3-inch rifle are adopted, and when made of they will weigh 350 and 500 pounds, respectively. For the pr both classes will fire projectiles of eight pounds' weight; the prop charge being twelve ounces of large-grain cannon-powder for the and sixteen ounces for the heavy gun. This charge is inclosed ordinary serge cartridge-bag.

Plate II shows the profiles of the light gun. It will be seen th exterior consists of two short cylinders forming re-inforces, and a cated cone forming the chase. These are connected with one an by fillets.

In the heavier gun the second or smaller cylinder is dispensed and the chase is carried back to the first cylinder. In both pa the rimbases are connected to the chase by heavy fillets.

At the rear end of the first cylinder a flat cheek, 1, is worked on side of the gun, and an elevating mass, or lug, (12,) underneath. right cheek carries the collar-hinge, the left receives the nose of collar-latch, and also holds the tangent-sight, which is set at a pe nent angle of two degrees to the left of the vertical in order to for drift of the projectile. The cheeks are joined to the first cyli on all sides (except to the rear) by fillets, as is also the elevating The rear faces of the cheeks, and also that of the elevating-lug, one with the general plane of the breech.

The bronze ingots for these guns are run solid, in a cast-iron mold, muzzle down, the mold being somewhat longer on breech muzzle than the neat length required for the finished gun. The ness of the chill-mold is a semi-diameter of the ingot at each po its length, and the diameter of the ingot is one-half an inch gr than that of the finished gun.

Before being turned upon the outside the guns are smooth-bore diameter of 2.62 inches, and then the bore is enlarged (by the su sive passage of ten steel mandrels, increasing gradually in size diameter of 2.92 inches. This treatment takes about ten per ce the extensibility out of the metal composing the walls of the (Note I.)

PLATE 1.

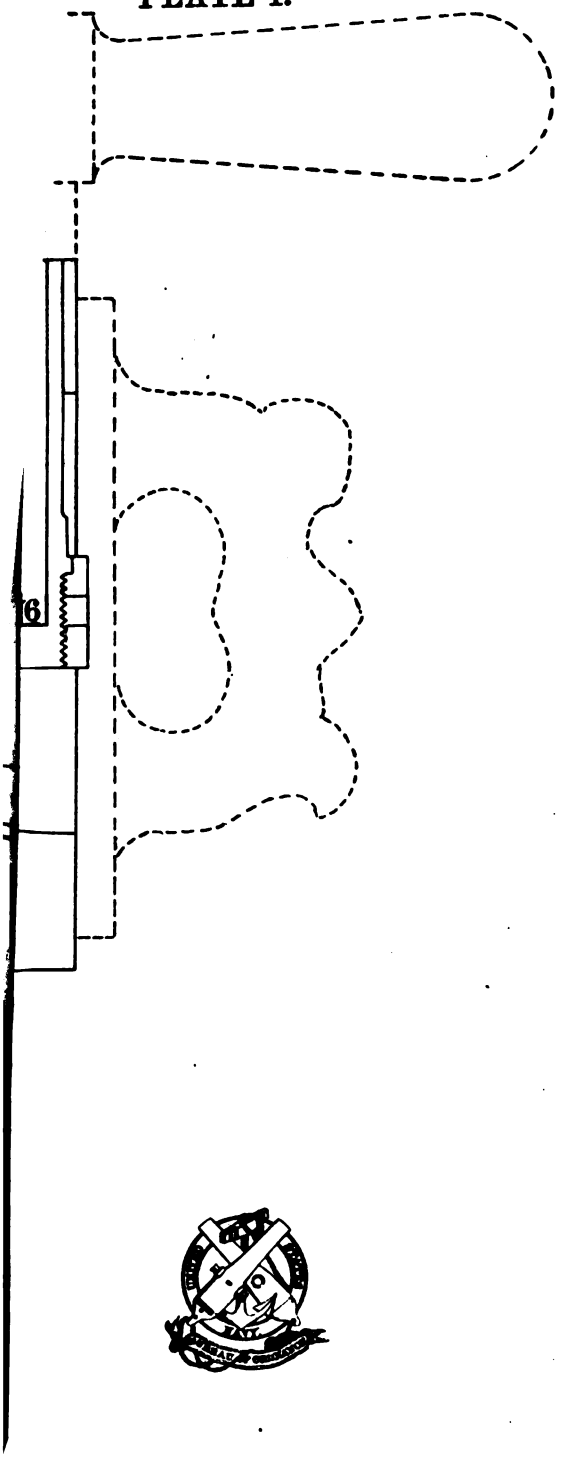

› guns are rifled with a regular right-handed twist, and show at uzzle sixteen ribs and sixteen grooves of equal breadth; the ribs g a height of four-hundredths of an inch.

› inclination of the rifling is six degrees from an element of the on the driving side of the rib, and somewhat less on the reverse making the width of the rib two-hundredths of an inch less at the f the shot than at the muzzle.

vard the bottom of the bore, and immediately in rear of the full ;, is found the "shot-chamber." The diameter of the bore proper mandreling is 2.92 inches across the ribs and 3 inches to the bot- f the grooves.

ıen the shot-chamber is reached, however, the ribs are cut away— slope—toward the rear, having an inclination of four-hundredths inch (the depth of the rib) in two inches of length. This incline led the compression-slope; it receives the belt of the projectile, ı loaded,) and centers the latter while in the loading position and is being driven into the bore. (Plate I, 25.) To the rear of this ression-slope the chamber continues on at a somewhat quicker in- ion, connecting the shot-chamber with the powder-chamber. The (Plate II, 22) is also a truncated cone, and has a diameter at the rd end of 3.20 inches, that of the rear end being 3.25 inches where ring-recess" is reached.

s recess is a short cylinder 0″.39 long. It contains the Broadwell ıeck ring, and is connected with the powder-chamber by a "round" ght-hundredths of an inch radius. (Plate I, 68.)

nediately in rear of the ring-recess is found the "screw-box." › I, 17.) It is united to the ring-recess by a heavy fillet. The -box has a female screw chased upon its surface, the thread having ıme profile and pitch as that cut upon the breech-plug. Three istant "blanks" are planed longitudinally through the thread, one removing one-sixth of the surface. One blank is found at the t part of the screw-box, and the other two equidistant from the around the interior surface

rear of the screw-box is the "guide-recess," (Plate I, 69,) a shal- ircular hollow in the rear face of the breech, having its sides in- l. As the collar closes, a projection or guide on its forward face to this recess and directs the axis of the collar into coincidence that of the screw-box, thus insuring the easy entrance of the h-plug. Immediately in rear of the guide-recess the gun is ter- ed by a plane, passed perpendicularly to the axis of the bore.

› lug for the elevating-screw is placed vertically under the first ler of the gun, and at its rear end. It is slotted in a longitudinal ion to receive the head of the elevating-screw, and is pierced lat- with a hole, which receives a ¾-inch pin used for coupling the of the screw to the gun.

The breech-mechanism.

er the gun is loaded, the opening in rear of the powder-chamber is l by the breech-plug, (Plate II, 38,) which is secured in its place as 's:

› plug (which is a cylindrical piece of bronze or soft steel) has a l cut upon it, having the same pitch and profile as that cut on the or of the screw-box in the breech of the gun. One-half of the ıg surface of the plug-thread must be cut away, (in the same manner ı already been described for the screw-box,) and the area thus to be

removed is distributed into three longitudinal blanks, cut at equal intervals around the engaging surface.

We thus have on the plug, and also in the screw-box, three sections of screw-threads, separated by blanks, running parallel to an element of the bore, forming a slotted screw.

In order to lock or secure the plug into the rear of the bore, it is only necessary to match its threaded sections to the blanks of the screw-box and to push the plug at once home. A turn to the right of one-sixth of the circle then engages (at the same time) all the threads of the plug with those of the screw-box; after which the plug is ready to oppose the effort of the charge. (Note II.)

In rear of the threaded sections the plug is plain (Part I, 41) where it works circumferentially in the collar, and it is terminated at the rear end by a flange, having its forward side furnished with locking-faces, (42,) the use of which will be explained further on. The rear end of the plug is deeply recessed, in order to obtain lightness; the forward end is terminated by a flat face, which is recessed in the center to receive the boss of the nose-plate, (56.)

The plug is also pierced with an axial hole (70) one inch in diameter.

The nose-plate is made of steel, and is somewhat less in diameter than the body of the plug. It presents the appearance of a low truncated cone, terminated by two short cylinders. On its rear surface it has a boss, (56,) from which projects the stem, (71,) which passes through the hole in the axis of the plug. A nut (72) runs upon this stem, and, bearing against the forward face of the hollow, enables us to bring the nose-plate to a firm bearing against the forward face of the plug.

The forward face of the nose-plate bears against the gas-check ring (73) when the breech is locked. The vent passes entirely through the axis of the nose-plate and stem, the rear orifice being found in the center of the after end of the stem, and the forward one in the center of the nose-plate.

At the latter point the nose-plate is recessed, (74,) and a gas-check (59) is fitted over the orifice of the vent. This vent-check, as it is called, consists of a disk of mild steel, secured over the interior orifice of the vent by four steel screws, which pierce through the disk perpendicular to its flat surface and near its edge. The screws are equidistant from one another, and their heads are not set down hard upon the disk, but allow it to rise about five-hundredths of an inch. The pressure of primer-gas through the vent pushes the disk forward and admits flame to the charge; then the pressure of gas arising from the combustion of the charge forces the disk firmly back upon the orifice of the vent, and prevents all leakage in that direction. (Note III.) The shanks of the four securing screws act as guides to the disk during its motion.

As before remarked, the outer orifice of the vent is found at the rear end of the axis of the stem; but as this is not a convenient place from which to fire the primer, a secondary or offset vent is drilled nearly through a short cylinder of steel, 75, (Plate I,) the lower end of which is made to pass vertically down through the nose-plate stem near its rear end. The lower end of the vent in this cylinder is turned at right angles and comes out in the axis of the main vent, as shown at 76.

It will be seen that if a primer is fired at 77, the gas has free passage to the forward orifice of the main vent, but is stopped off toward the rear. The upper end of the cylinder containing the secondary vent is inserted (from below) through the upper part of the plug-flange, and comes out very conveniently for priming. (Note IV.)

It will be understood from what has preceded that the nose-plate is

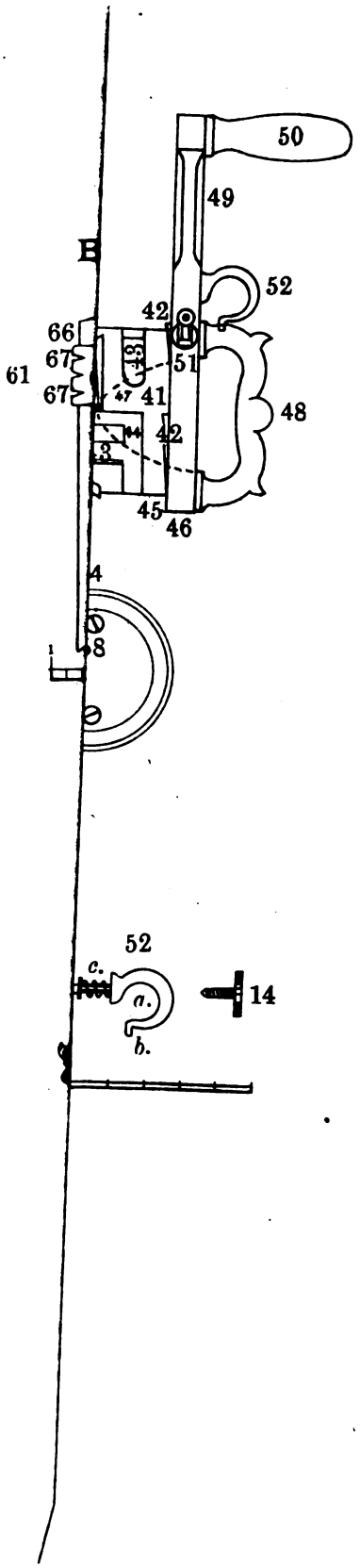
50
49
B
52
42
66
67
61
67
51
41
48
42
3
45
46
4
8
1
52
c.
a.
b.
14

novable longitudinally by loosening or tightening the nut upon the stem. The object of this is to allow of the nose-plate face being brought up against the Broadwell ring, even if the plug should be found set to the rear somewhat after repeated firing. In such a case the nose-plate will be brought forward by liners (in the form of flat rings of the necessary thickness) inserted behind the rear bearing faces of the plate at 56 and 78.

The plate is then replaced in the plug, and the nut being set up taut, the forward face of the nose-plate should be found to bear against the ring. Care must be taken to have the outer and inner liners of equal thickness. (Note V.) It is not necessary that the nose plate should press the ring *very* strongly—only that the surfaces should bear evenly and moderately against each other, the crown of the ring being at the same time pressed against the forward face of the ring-recess.

A slot is cut upon the surface of each of the three closing-blanks on the plug; these slots run longitudinally down the center of the blanks on the forward (or engaging) part of the plug, but upon the locking-blank they turn, and run circumferentially at the same inclination as that of the breech-plug thread, and in a direction contrary to the turn of the plug while being locked into the screw-box. These slots are wide and deep enough to readily receive the lower ends of the guide-bolts, which project through the collar.

Near the closing-slot in the left blank is found a second and narrower slot, parallel to the longitudinal part of the large one, and running into the latter on the locking-blank. This smaller slot receives the heel of the latch, and at its forward end rises on an incline to the saddle, which will be further referred to in the description of the collar.

Around the rear end of the breech-plug a flange is raised, the forward side of which is finished with three locking-faces. (Plate II, 42.) These have the same pitch as those on the rear face of the collar. They match with those of the collar when the plug is thrust home, and while it is being turned to a bearing against the gas-check ring. These locking-faces (by their contact with those of the collar) prevent any jar being given to the lower ends of the guide-bolts when the plug is strongly shoved home in the breech, and direct the threads on the breech-plug to an easy engagement with those in the screw-box. This engagement is further facilitated by the chamfering of the right-hand ends of the threads on the breech-plug.

The plug is moved in and out of the screw-box by means of a bronze grasp-handle. On the upper end this gripe forms one with the lever used for locking the breech-mechanism.

The lever and handle dovetail deeply into the rear face of the plug-flange, and secured there by four stout screws which pass through lugs at the top and bottom of the grasp. Thus arranged, the lever is enabled to bear very considerable strain in the direction in which locking and unlocking is effected. The lever is also furnished with a handle at its upper end.

The Broadwell gas-check ring is made of copper, and fits into the ring-recess. (Plate I, 68.) The front of the ring bears against the forward face of the recess, and the face projects one-hundredth of an inch to the rear of the recess wall. The ring is cylindrical on its exterior, fits the recess neatly, and its face is furnished with two circular grooves, as is usual in this kind of check.

The forward side (or curve) of the ring is furnished with the usual expansion-groove and rib, and, as before remarked, the forward face of the nose-plate bears squarely against the face of the ring when the

breech-mechanism is locked. This check works very well indeed. The ring has a sufficient diameter to carry the inner edge of its flange back from the walls of the powder-chamber about one-tenth of an inch all around. This clearance is given to prevent injury to the ring during quick loading, and also to lessen the liability of the ring being dragged out of the recess by a sponge or while a shell is being withdrawn from the bore.

The plug, which has just been described, is the main feature of the breech apparatus, the other parts being merely appliances used to facilitate its working.

The principal of these appliances is the collar. (Plates I and II, 27.) This is a heavy ring, through which the breech-plug slides, by means of which it is turned away from the bore, and on which it rests when the breech is open.

The collar is strongly hinged to the right cheek of the gun, and is latched, when closed, to the left cheek. The latch is automatic in its action; it passes through a recess on the left side of the collar, and is so arranged that, besides holding the collar in place when closed, it prevents the plug from being pushed forward by any ordinary force, after the collar has been thrown back, (or open.) This is effected as follows:

The heel of the latch-shank slides in its groove, and as the plug is being drawn out and approaches the end of its travel, this heel mounts an incline. The nose is thus liberated from its notch in the left cheek of the gun. As the plug is still drawn back, the heel of the latch is pushed down by its spiral spring into a saddle. The plug is now held steadily, as considerable force must be exerted in the direction of closing before the heel can be made to rise against its spring sufficiently to start out of the saddle.

It is necessary that the plug should be thus held, for in case of an attempt being made to close the collar when the plug is not drawn back as far as its travel will allow, the edge of its threads will strike upon and probably mar the rear threads in the screw-box, thus rendering the closing of the breech difficult.

Three masses are cast upon the round of the collar, and at equal distances from one another, around its periphery. Through them are screwed (radially) three stout bolts, called guide-bolts. (Plates I and II, 60.) The lower ends of these bolts are plain, and project about a quarter of an inch into the collar-bore, sinking nearly the same amount into the guide-slot cut on the surface of the breech-plug. The guide-bolts limit the travel of the plug through the collar, and steady it generally during its working.

There is one more mass on the round of the collar; it is placed on the upper side, at one-sixth of the circumference to the right of the vertical plane, and is called the catch-mass. (Plate II, 33.) In the center of its after face it is pierced (in a line parallel to the axis of the bore) with a small hole to receive the heel of the catch-pin, which is borne on the lever of the plug. When the heel of the catch is engaged in this hole, it retains the lever of the plug in the locking position and prevents it from being turned back until the catch is raised by hand.

A circular portion of the forward face of the collar, lying immediately around its bore (or hole for receiving the breech-plug) is raised nearly a quarter of an inch above the general plane, and is connected therewith by an incline. This protuberance, (Plate I, 36,) which is called the guide, fits the corresponding guide-recess on the base of the breech of the gun. In case the collar-hinge should work loose, this arrangement is intended to guide the axis of the collar-bore into coincidence with that of the bore of the gun as the collar is closing.

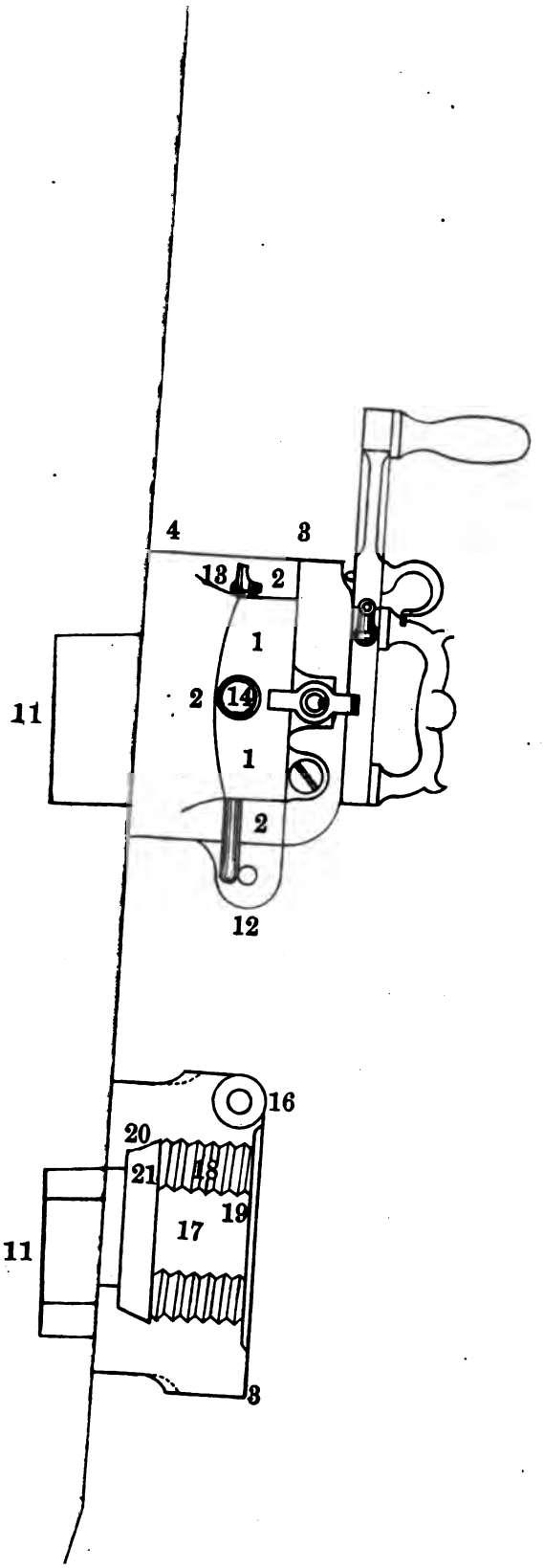
4
3
13
2
1
2
14
1
2
12
11
16
20
21
18
19
17
11
3

The bore of the collar is furnished on its surface with lands and rooves, three of each, (Plate II, 29, 30,) and their direction is parallel › an element of the bore of the gun. They are each nearly equal in readth to one-sixth of the circumference of the bore, and match lands nd grooves with the blanks and threaded sections of the breech-plug 'hen the latter is in position to work longitudinally through the collar.

As the blanks of the plug slide upon the lands of the collar, the later prevent the edges of the threads on the plug from catching the edges f those in the screw-box while the plug is being worked in or out. The ower ends of the radial guide-bolts enter the bore of the collar hrough the center of the lands.

At the after face of the collar the rear edges of the lands are inclined to the same pitch as that of the threads on the breech-plug. These inclines are called the collar locking-faces, and are intended to match with the similar faces upon the flange of the plug after the latter is pushed home into the gun. When this contact is complete the threads of the plug and those of the screw-box are so situated with respect to each other that they will readily engage if the lever be turned to the right. (Note VI.)

Projectiles, &c.

Shrapnel and shell are fired from these guns, the former weighing eight and the latter seven pounds, (loaded and fused.) The total length of the projectiles is two and one-half calibers. Their heads are ellipsoidal in shape and their cylindrical parts one and a half calibers in length. The walls of the shrapnel are three-tenths of an inch thick, and the chamber contains fifty-five leaden balls, caliber .52. The bursting-charge of two ounces of musket-powder is placed in an axial chamber running through the mass of bullets, which are retained in their places by sulphur. The shell is four-tenths of an inch thick, and presents the same general external appearance as the shrapnel. (Plate V, Figs. 1, 2, and 3.)

Each projectile is fitted with a copper rotation-belt (*r*, Fig. 2) about over the center of gravity. This belt has a length of *bearing* of two inches, and a taper toward the front of four-hundredths of an inch (all around) in the two inches, being an incline of one to fifty. The diameter of the forward bearing end of the belt is 2″.92, and that of the rear end is 3″; this makes the squeeze on the belt in passing from the chamber into the bore just equal to the height of the rib in the gun.

The rotation-belt is furnished with grooves on its rear half only, as the squeeze on the forward half is but slight, and it is considered that the projectile requires firm bearing just forward of the center of gravity while on its passage through the bore.

About three-tenths of an inch from the base of the projectile there is fitted a steadying-ring, (*s*, Fig. 2.) It is one-quarter of an inch broad, semi-circular in section, and has a diameter of 2″.98. Before the projectile is driven forward by the powder the steadying-ring does not bear against the walls of the chamber, but as soon as the bore proper is reached, the ring shows a squeeze of three-hundredths of an inch (all around) against the ribs, which thus hold the rear end of the projectile firmly and prevent it from battering or bruising the faces of the ribs, which, but for the presence of the ring, it would do as soon as the gun becomes a little worn. Both belt and ring are squeezed upon the body of the projectile in a screw-press. (Note VII.)

Fuzes.

Fuses of several kinds have been designed during the course of experiments with these projectiles. One was a small percussion fuse hav-

ing the fulminate in a movable cap; another, a time-fuse with pe sion igniter, the composition being sometimes disposed in a circle, exposed by piercing, as in the service Bormann, and sometimes arra in a vertical column and pierced through the side of the stock, as i practice with the Boxer-fuse.

The percussion fuse referred to seems to work well, and will us explode the shell on contact with water when the elevation is over degrees.

The time-fuses are satisfactory up to five seconds, but beyond they have not as yet given very uniform results, though they show provement as experiment goes on. (Note VIII.)

A very simple and ingenious rear fuse, (combined time and co sion,) the invention of Dr. William E. Woodbridge, has alse been ex mented with, and has given encouraging results.

The cartridges that will first be introduced are cylindrical serge holding twelve and sixteen ounces of powder, respectively. The for end of that now in use is closed by a thin wooden sabot, having a gr on its circumference, which takes a couple of turns of twine, thus s ing the forward edge of the bag. (Note IX.)

The powder used is of rather coarse granulation. It was forn known as "No. 7," and subsequently as rifle-powder. Ordinary ca powder has, however, been used in nearly all the experimental f and is well suited to the guns, but the coarser grain gives as goo sults, with less pressure.) Note X.)

NOMENCLATURE FOR 3-INCH BREECH-LOADING HOWITZER, STEEL FIELD-CARRI

Carriage.

1. Cheek or bracket.
2. Wheels.
3. Axle, (tubular.)
4. Brake-screw.
5. Brake.
6. Axle-bearing.
7. Axle-clamp.
8. Trunnion-bearings.
9. Trunnion cap-squares.
10. Breast-transom.
11. After transom.
12. Stay-bolt.
13. Trail-chock, (shoe.)
14. Lunette.
15. Elevator-bearing.
16. Trail-wheel.
17. Trail-wheel pin, (section.)
18. Trail-wheel loop.
19. Trail-wheel loop-pin, (section.)
20. Pintle-hook, with cap-square.
21. Elevating-screw, (*a* disk.)
22. Elevating-nut, consisting of nu arms.
23. Box-rest.
24. Box trunnion-bearings.
25. Box axle-bearing and cap-square
26. Box-lugs.
27. Key-lug and key, (*b*, nose; *c*, s *d*, tail.)
28. Box-rest, cheek-bolt.
29. Linchpin, (head, shank, spring.)
30. Washer and eye.
31. Wheel, felly, spoke, tire.)
32. Hub, consisting of hub proper, (lower *b*, and hub; bolts.)
33. Wrench for carriage-bolts.

Box.

34. Handles.
35. Handle-straps.
36. Trunnions.
37. Clinch-hooks, (*a*, hook; *b*, piv clinch-plates.)
38. Lock.
39. Compartments, (interior.)

Metallic cartridge.

40. Outer cup, with bead.
41. Inner cup.
42. Vent-disk.
43. Vent.
44. Ignition-holes.
45. Cylinder.
46. Solder-seam.
47. Teeth.
48. Strengthening rivet.

Field-carriage.

-carriage consists of a wrought-iron tubular axle attached to
posed of two cheeks of quarter-inch sheet steel, placed verti-
connected together by transoms.
of the carriage for the light gun has an external diameter of
s, the metal (wrought iron) being half an inch thick. The
lid, and are welded securely into the ends of the tube.
is supported on wheels three feet in diameter. The fellies
are made of oak, and the latter are inserted into a bronze
wheels are kept in place by spring linchpins outside of
hers.
ent parts composing the trail are riveted together, the cheeks
enough at the forward end to raise the axis of the gun twelve
e the center of the axle. There is a breast-transom joining
toward their forward ends. It extends diagonally from just
runnion-seats to the lower edges of the cheeks. The after
placed just in rear of the elevating-screw, and stands verti-
en the cheeks.
nsoms are of quarter-inch steel, and are flanged along each
ive the rivets that join them to the cheeks.
between the after transom and the shoe is placed a tie or stay-
purpose of steadying the cheeks. A section of steam-pipe
ween the cheeks, and a piece of round-iron rod is put through
and the tube, and riveted outside the cheeks, thus binding
. The upper edges of the trail-sheets, from the after tran-
shoe, are stiffened by angle steel riveted on.
int where the trail takes the ground when the trail-wheel is
the cheeks are joined by a bronze shoe, which is flanged
ach side to receive rivets. It is also flattened and curved on
, in order to form a convenient surface for sliding over the
n recoil takes place. The side flanges of this shoe are joined
agm. The whole shoe forms a single casting.
ssing to the rear of the shoe, the trail-pieces are curved
the usual manner to receive the trail-wheel. This wheel is
12 inches in diameter. It is hung upon a "wheel-strap,"
s around a pin permanently inserted through the cheeks
of the shoe. The trail-wheel, when shipped for moving the
ns upon its own pin, which is inserted through the cheeks of
l through the hub of the wheel, raising the shoe about an
he ground. When the wheel is to be unshipped, preparatory
e pin is withdrawn, and, the wheel being slightly raised, the
inserted through the cheeks and through a hole placed far
m the center of the hub to raise the wheel sufficiently to
go clear when the shoe of the trail is in contact with the

tely in rear of the trail-wheel the cheeks terminate, being
gether by means of a small wrought-iron chock welded be-
. This chock has an eye upon its rear end.
, as just described, is fitted to the tubular axle by bearings,
the under edge of each cheek near its forward end, and
he axle is secured in place by clamps passing under it and
he axle-bearings at each end. The axle is prevented from
these bearings by permanent keys, which are inserted into
d fit into seats cut in the clamps.
nions of the gun are supported in bronze trunnion-bearings

let into each cheek at the upper forward edge, and riveted in
Capsquares are fitted to these bearings, secured with a hinge at t
end, and an eye and forelock at the forward end. A bronze pint
is secured to the axle between the cheek-bearings. It is intende
used for hooking the trail of a second carriage (if desired) when
march.

The exterior of the tubular axle has a thread cut on it at each sh
This thread is intended for the wheel-brake to work upon. The
consists of a hollow bronze cylinder, or ring, with a short lever ca
ally on its exterior. Half of the interior surface of the ring has a
cut on it similar to that at the shoulder of the axle. The outer
plain, and coned to fit the surface of the wheel-hub inside of the s
When this brake is in place on the threaded part of the axle, by t
the handle in one direction, the coned part can be made to ap
and bind closely on the similar part of the hub inside of the spok
by reversing it can be drawn back clear of the hub. When set
hand, the brakes confine the recoil to about 6 feet. After bein
adjusted they are automatic in their action; tightening on rec
slacking when the carriage is run up to the firing position.

The rests for ammunition-boxes are of bronze, and are attached
axle by capsquares at a point midway between the brakes and
bearings. Each rest consists of a longitudinal strip of bronze, ha
cross-piece at its forward end, and one also near its after end
forward cross-piece has a lug at each extremity, forming a hoo
which the box-trunnions can slide from the rear. The rear cros
turns up at each end, forming lugs, or stops, to prevent the bo
working off the frame laterally.

The lug at the rear end next the trail has an extension-piece r
toward and touching the cheek; a hole is drilled through the ch
this point, and a stout bolt is screwed from the inside of the che
a hole in the end of the extension-piece just mentioned. This
prevents the box-rest from turning upon the axle. The rear end
longitudinal strip is turned up to form a lug, which keeps the box
in place) from moving to the rear and disengaging its trunnion
the hooks. A key introduced through this rear lug fits into a
the rear handle-strap of the box, and prevents the latter from
This key can be drawn to the rear when its handle is turned u
thus affording a ready means of removing the boxes when desired
longitudinal and cross-strips of the box-rests are stiffened by ribs
under side.

The ammunition-boxes are of pine, and each holds ten rounds
projectiles are stowed (between vertical cleats) in two parallel ro
upper ends being steadied in cleats nailed to the inside of the
The cartridges stow between the two rows of projectiles.

The box-handles are of bronze, and triangular in shape; t
secured to the boxes by bronze straps. The lower end of eac
turns under the bottom of the box and is there secured. Th
handle strap is enlarged near the lower part, and has worked in i
hole to receive the key, which is inserted through the after lug
box-rest.

Clinch-hooks are used for keeping down the covers; they
bronze, and so arranged that the hook binds most strongly agai
rib on the clinch-plate at a point somewhat short of the posi
which it is intended that the hook shall rest when the lid is f
down. It will be difficult for the apparatus to unhook accident
the hook meets increasing resistance for some time after firs

turned back. One of these hooks is placed on each end of the box, the clinch-plates being secured to the corresponding ends of the lid.

The box-trunnions are of bronze, and are secured by screws to the sides of the box near its lower edge, and about a quarter of the length of the box from its forward end. The lower edge of the trunnion is in the same plane as the bottom of the box. These boxes are shipped and unshipped from the rear.

DISEMBARKING AND EMBARKING.

The howitzer is intended to be disembarked from the boat and embarked separate from its carriage. This plan offers several advantages, the principal of which are avoidance of the difficult operations of mounting the gun on its field-carriage while in the bow of the boat, and of guiding the gun on its carriage down the inclined landing-skids.

On reaching the landing-place, the capsquares are thrown back, and levating-pin pulled out. A spar some twelve or fourteen feet in length ay the boat's mast) is laid longitudinally on top of the gun, which is ttached to the spar just forward of the trunnions by a grommet slipped ver the chase, and just abaft the trunnions by a couple of turns of a ft lashing. Thus slung, the gun hangs nearly balanced and very eadily.

Four of the higher gun numbers then jump over the bows, two of em placing their shoulders under the forward end of the spar, while e remaining two stand by to take the heel of the spar after the gun as been lifted from its trunnion-seats and has passed over the bows, nd ahead of their position. The men in the water at the forward end the spar, and some of the boat's crew at the after end, then raise the ar, and with it the gun, which passes out of the boat over the bows, nd is carried ashore by the numbers and in the manner mentioned ove. It is then placed on its field-carriage.

It is thought that on most occasions, in actual service, (at least in the se of the light gun,) the tracks in the boat and also the landing-skids an be dispensed with. The field-carriage, without its ammunition-oxes, could be put overboard without difficulty from the boat's quar-er, and run up by drag-rope on the beach.

To embark this carriage, the boat lying with her stern to the beach, un the carriage into the water, axle toward the boat. Two men out-ide of each wheel, grasping the fellies at the lowest part, raise the car-iage up until the axle can be seized by the men on the taffrail. The en in the water then grasp the trail and push upward toward those in e boat. The axle once inside the taffrail, the trail is easily gotten ver, and the carriage can be placed in its proper position.

BOAT-CARRIAGE.

The boat carriage is composed of bronze, wrought-iron, and steel. he top of the slide consists of two flat rails of wrought-iron, united the forward ends (by welds and rivets) to a wrought-iron transom. his transom is riveted to the pivot-plate or jaws. At the rear end the ils are united by a bronze casting or transom, which extends from one the other, and affords a bearing for the India-rubber pads forming the umpers. The ends of this transom are bolted through the extreme ear ends of the rails by strong nut-bolts. The rails are supported by heeks, about six inches deep, made of quarter-inch steel, flanged at he upper and lower edges.

The upper flanges serve for riveting the cheeks to the rails, the heads of the rivets being countersunk on the upper side. The lower flanges

form the feet or base on which the slide rests and traverses. Near the lower part of the cheeks, at each end, there is a tie-bolt within a wrought-iron tube, the ends of the tie-bolt pass through the cheeks and are riveted over, thus forming stay-bolts, which stiffen the structure, and prevent the cheeks from spreading at the lower part.

The rails are planed on their upper and under sides, and have a thickness of one-hundredth of an inch more at the rear than at the front ends. This gives increasing squeeze to the compressor as it travels to the rear.

The top carriage is made of bronze, and is cast in one piece; the part which slides upon the rails taking the form of transoms, that which supports the trunnions of the gun being formed into four legs, two nearly vertical, the other extending from the triunnion-bearings nearly to the rear end of the top carriage. The forward legs are joined together by a transom about half-way up toward the gun, and all are strengthened by ribs.

The compressor is of the frictional form. On the under side of the forward transom of the carriage are cast four masses or projections, two just forward of the place for the compressor-plate and two just abaft it. These are intended as guides to force the compressor-plate to follow the movements of the carriage; they also prevent the carriage from working laterally upon the slide.

The compressor-plate is a rectangular flat piece of bronze, heavily ribbed on the under side. The rib expands into a boss in the center of the rectangle, and through this a hole is drilled, (perpendicular to the plane of the face,) which receives the compressor-screw. The longer axis of the compressor-plate stands across the general direction of the rails, and it is recessed on its upper side toward the ends for the extent of its bearing on the under sides of the rails. Pieces of lignum-vitæ are let into these recesses, and form the frictional surface which bears against the slide, giving the range of elasticity which is necessary to all such compressors. Elasticity is also to a certain extent obtained by the spring of the compressor-plate, owing to the distance of the point of frictional bearing from that of application of the power.

The compressor-screw being shipped through the plate from below upward, and its head engaged in the recess, (to prevent turning,) the plate is placed under the slide, and the bolt is pushed up through the hole in the forward transom of the carriage. When in position, the compressor-screw projects some distance above the transom of the carriage, and the lignum-vitæ pieces on the ends of the compressor-plate bear against the under sides of the rails of the slide. A strong nut is then screwed on the upper end of the compressor-screw, and run down until it bears against the boss on the upper side of the carriage-transom. A lever is now shipped on this nut, and by applying power the compressor is made to bind firmly against the under side of the slide, the action of the nut forcing the carriage down on top, thus squeezing the rails between the two surfaces.

The compressor-plate also acts as a "clip," and prevents the forward end of the carriage from rising off the slide when the gun is fired. The rear end of the carriage is kept down by projections on the ends of the elevating-screw trunnion-bearings.

The compressor is simple and efficient; it can be easily made automatic in its action (as regards tightening when the gun is fired) by putting a little lead (or other weight) into the end of the lever. The twist of the compressor-screw is such that the inertia of the lever will cause the screw to "take up" when the carriage is jerked back as the

gun is fired. In the course of experimental practice at Washington navy-yard, the lever is usually turned up to a slight bearing before firing the gun. The play of the lever when thrown back is limited by the after leg of the carriage.

As the elevating-screw is attached at its upper end to the gun, it must be at liberty to oscillate on the carriage, and for that purpose it works through a nut which is hung on trunnions near the after end of the carriage. The elevator is a double screw, and is moved by means of a broad hand-disk.

The usual recoil of the light gun on this carriage is from ten to fifteen inches. There is an attachment for adapting the carriage to use with the heavier gun, which, mounted on it, shows a recoil slightly greater.

The pivot-plate for the bow of the boat has but a single eye, the double eye being on the carriage. Above and below the eye the plate is pierced for one-and-a-quarter-inch bolts, which pass through the stem of the boat, and are fitted with good, deep nuts outboard. The stern-plate will also be fitted with two bolts. These plates are purposely made with a large margin of strength.

When the gun is mounted, the top carriage is readily moved in and out by hand.

MANUAL OF DRILL FOR 3-IN. B. L. HOWITZER ON FIELD-CARRIAGE, CREW OF 12 MEN.

No. 1. Captain of howitzer.
2. Second captain of howitzer.
3. First sponger and loader.
4. Second sponger and loader.

No. 5. Left wheelman.
6. Right wheelman.
8. Trailman.
Nos. 7 and 9. Ammunition men.
10, 11, 12, and quarter-gunner, in rear.

Station of crew of gun "in battery."

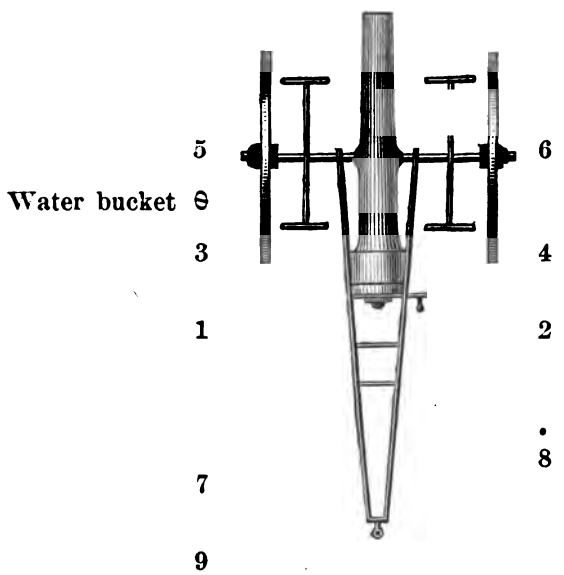

Boxes 20 paces in the rear.

Q. G.
10, 11, 12.

Duties.

No. 1 superintends—gives orders in absence of an officer. Places himself on the left and rear of gun just outside of the line of the wheel.

No. 2 provides himself with haversack containing boring-bit, nipple-wrench, lanyard, and friction-primers. Places himself on right side of gun opposite No. 1.

No. 3 provides himself with staff-sponge, which he will wet in water-bucket, and never allow the sponge-head to touch the ground. Places himself on left of gun abreast of breech and directly in front of No. 1.

No. 4 receives wet hand (or marine) sponge from No. 5. Places himself on right side of gun opposite No. 3.

No. 5 provides marine sponge and water-bucket, which he will place outside of and between himself and No. 3. Wets marine sponge and hands it to No. 4. Sets up wheel-brake and then places himself outside of left wheel in line with the axle and directly in front of No. 3.

No. 6 sets up wheel-brake and places himself on the right side of the gun opposite No. 5.

No. 7 collects ammunition-pouches from Nos. 3, 4, 5, and 6, (see note,) and carries them to the rear. Places himself two yards in rear and left of the trail. He will alternate with No. 9 in supplying the gun with ammunition.

No. 8 unbolts the trail-wheel and secures it against the recoil, unhooks drag-rope, carries it to the rear and coils it near the ammunition-boxes, then places himself to the right and abreast of the trail-wheel in line with the numbers in front.

No. 9, assisted by No. 11, will carry the left ammunition-box to the rear, then take station two yards in rear of No. 7.

No. 10, assisted by No. 12, will carry the right ammunition-box to the rear, then falls in line in rear of ammunition-boxes under cover if directed.

Quarter-gunner carries spare-article box and short drag-rope to the rear. Has general supervision of all articles in rear of the gun.

Nos. 11 and 12 fall in line in rear of ammunition, under cover if directed.

"Sponge."

No. 4 steps to the right side of the breech, seizes the gripe of the plug with the left hand, the forefinger through the loop of the catch, draws the catch back, and with the right hand throws the lever sharply upward until it becomes vertical, then with the left hand draws the plug smartly to the rear, which will release the collar and open the breech; he then inspects the plug screw and nose and wipes them off. He will wipe out the recess after the bristle sponge has passed through, taking care to remove all dirt from the recess.

No. 3 steps to the left side of the breech, and as soon as the breech is open passes the sponge-handle through the bore, sponge-head to the rear, until the rammer-head projects from the muzzle, then receives shell from Nos. 7 or 9.

No. 5 places himself at left of muzzle and seizes sponge-staff as soon as possible, draws it through until the mark on the handle is at the face of the muzzle, then turns it two or three times, (for the purpose of cleaning the powder and shot chambers,) and draws it through the bore, dips sponge-head carefully in the bucket, and passes the sponge to No. 3 as soon as that number has resumed his position outside of the line of recoil. If the marine sponge requires wetting, No. 4 hands it to No. 5, who wets it and returns it.

"Load."

No. 3 enters the projectile and pushes it smartly home with the right hand, then receives the cartridge from the passer and places it in the chamber, falls back out of line of the recoil and receives sponge from No. 5.

No. 4 closes breech. With the left hand pushes the plug smartly forward and with right hand throws the lever down to its place. He then attends the elevating-screw.

No. 2 while the gun is being loaded hooks a primer to the lanyard and prepares to fire the piece.

"Point."

No. 1 adjusts sight-bar and falls back to end of trail in line of sight.

No. 4 tends elevating-screw.

No. 8 assists No. 1 in training the gun when it is necessary.

No. 2 has a primer hooked to lanyard and held in his left hand, bights of the lanyard in his right.

"Ready."

All numbers fall back outside of line of the recoil except No. 2, who steps forward and inserts primer in nipple, then falls back clear of the wheel to end of lanyard, holding it in his right hand.

"Fire."

No. 2 pulls lanyard.

Nos. 5 and 6 run gun up into position.

"Secure."

All numbers will secure what they have cast loose at the order "In Battery," (Nos. 5 and 6 being particular to release the wheel-brakes before the ammunition-boxes are placed on the rests,) then man the drag-ropes.

Note.—The rounds from the boxes of these numbers are to be used first.

All movements of the breech must be made smartly, otherwise the mechanism does not work smoothly.

The wheel-brakes should be set up but moderately as they tighten on recoil. They do not require slacking when the gun is run up to battery, but adjust themselves. The brakes cannot be released after the ammunition-boxes are on the rests; therefore, at the order "Secure," relieving them is the first thing to be attended to.

When the gun is mounted on the boat-carriage the numbers as high as 6, inclusive, have corresponding duties to those laid down for shore services, as far as the manipulation of the gun itself is concerned, with the following exceptions:

The gun is fired (as well as pointed) by No. 1.

No. 2 inserts the primer into the nipple at the order "Point," hands the toggle of the lanyard to No. 1, and then assists in training.

As regards the carriage, No. 5 attends the pivot-bolt; No. 6, the compressor.

All the numbers abreast the gun assist to run in and out.

Precautions.

If the breech is difficult to open, strike a few blows with the rammer head, or a mallet, on a wooden setter held against the lever below the handle.

If it is closed with difficulty, see that the cartridge bag has not been caught, or the shot not home. Sponge off the plug with a dripping sponge; water is the best lubricator in firing. A soft cloth, which does not ravel, is quite as good as a marine sponge.

If the shell does not go home readily give it one or two smart taps with the rammer-head. See that the shell has no sand or dirt on it.

Miss-fire.

Examine the exterior vent, and if choked clear it with the plyers. Then try a second primer. Do not open the breech until certain there is not a hang-fire; then examine the vent-check and see that it is loose.

Cease firing.

As a rule the piece should be discharged, or the load drawn. As both time and percussion fuses have fulminate igniters, the shell or shrapnel should be pushed out, not struck a hard blow.

On shore.

It will be observed that there is a pintle-hook (20) on the axle for the lunette, by which two carriages can be coupled and thus ease the draught.

There will then be a great temptation to utilize the carriage for transportation of extra ammunition, intrenching tools, or provisions. The officer should have strength of mind to resist this, since the carriages are made as light as consistent with proper strength for the service for which they were designed; if over-weighted they would be over-strained.

CLEANING 3-IN. B. L. HOWITZERS.

Bore and chamber.

Remove the elevating-screw, open the breech-mechanism, raise the breech, and wash out the bore and chamber with a wet woolen sponge, entered at the breech. If very dirty, use a weak solution of potash or soap-suds.

Breech-mechanism.

Wash with a wet marine sponge the plug and its recess. If this will not remove dirt and gum, use the bristle-brush and pointed stick to clean out the screw-threads and corners, push the plug in and out the collar and turn it so as to get at all parts. Dry them well with a clean rag, also the bore and chamber, using the pointed stick and rag to thoroughly dry all recesses. If any of the iron or steel parts are slightly rusted, clean them with an oiled stick. The breech should be left open until all parts are thoroughly dry, and, as a rule, kept open.

Oiling.

Have a soft brush and woolen rags, kept only for this purpose, and best machinery-oil. If the oil is thick it should be filtered. Oil the bore and chamber with a linen rag slightly oiled, wraped round a sponge-head.

Pass the oiled brush very slightly over all parts of the mechanism; with a feather oil the hinges and interior of the collar and the guides and slots of the plug. Run the elevating-screw up and down, and slightly oil the iron threads.

If by gross negligence the breech-plug or other steel parts should become much rusted, the armorer, who is required to be a skillful mechanic, should be employed to dismount and clean it, under the supervision of an officer.

Cleaning implements.

The only materials to be employed are marine sponges, woolen and cotton rags, pointed sticks of soft wood, small bristle-brushes, long and short sponges for bore and chamber. The use of files, scrapers, emery, and bath-bricks is absolutely forbidden. In dismounting the parts, wooden mallets, hard-wood setters, and the proper wrenches shall be used.

Firing.

Before firing all oil should be wiped off the plug, and after each round the plug, nose-plate, and breech-recess should be sponged with a wet marine sponge. The mechanism will then always work freely.

In the intervals of firing, if the piece is at rest, the breech should be left open. Tompions should never be used, as neglect to remove them may cause very serious accidents. If necessary, muzzle-bags should be fitted.

The breech-mechanism should be removed at sea.

NOTE BY THE CHIEF OF BUREAU.

In 1873 Captain Sebert, Artillerie de la Marine, says, speaking of heavy guns 14 to 42 cm.:

Dupuis que cette artillerie a été placée entre les mains de nos marins et de nos artilleurs, grâce aux règles prudentes et sûrement vérifiées auxquelles elle a été assujettie, *pas un seul accident de rupture* n'est survenu; et cependant il a été fait des tirs d'exercice, à petite et à grande charge, en nombre considérable, lesquels, entre autres sur le vaisseau-école des matelots canonniers, se comptent par 50 et 60,000. Aucune nation ne peut proclamer un pareil résultat.

Il faut d'ailleurs bien se garder de confondre, confusion dont on a parfois abusé, les résultats du *service régulier* avec ceux du polygone de Gavre, où des résistances à des maximum d'efforts sont expérimentées et les règles d'emploi sont déterminées.

C'est là qu'en faisant éclater des canons à des limites extrêmes, on apprend à ne pas les faire éclater dans leur tir normal.

NOTES.

NOTE I.—*Casting and stretching.*—Chilling bronze increases its density, raises its elastic limit considerably, its tensile limit somewhat, and diminishes its extensibility. This metal has, however, a surplus of the latter quality, and can afford to lose some.

The absolute amount of change of quality experienced by chilled ingots seems to vary somewhat with the mass of the metal at different points in the mold, even where the thickness of the mold is kept proportional to the diameter of its ingot at each point; and this fact was soon demonstrated by the discovery that the chase and muzzle parts of the short howitzer ingot could not bear nearly as much expansion (from mandreling) as the large or breech parts.

Cracks appeared on the crust or outer surface at the points mentioned, and threatened to penetrate to the lines of the finished gun. These cracks usually appeared from the muzzle to just abaft the trunnions; and at the same time it was noticed that the breech parts were not hardened by the action of the chill as much as was desirable.

It thus became necessary to lessen the chill on the muzzle parts and to increase it on the breech, which was accomplished by extending the chill-mold some inches beyond the lines of the finished gun at each end.

By this means the molten bronze below the finished muzzle-lines retard the chill in

that vicinity; and the substitution of chilled bronze above the breech for the hot sinking head in sand-walls which had at first occupied that position, increased the chill at the breech end of the gun.

The qualities of the ingot were thus rendered more uniform throughout, though this could be more readily done in a future case by increasing or diminishing the thickness of the walls of the chill-mold itself.

The principal object in view in endeavoring to harmonize the qualities of the metal throughout the ingot, was to secure an expanded bore of uniform diameter. The amount of "spring-back" of the walls of the bore after the passage of the mandrel depending at each point on the amount of chill which the metal about that point had previously experienced, the elasticity exhibited by bronze being roughly proportional to the amount of chill.

It will be readily seen that the exterior of the gun would better support the interior parts against the effort of the charge if the outside metal of the ingot could be left to become part of the finished gun. This is, however, not practicable, because this layer, being much chilled and having but little extensibility, is generally more or less cracked by the stretch it has to sustain in the mandreling process. Besides, it is generally full of fissures and bubbles, and about a quarter of an inch all around should be taken off before close and uniform metal is reached.

The irregularities on the exterior of the ingots increase as the interior of the chill-mold becomes cracked with use, the cracks retain air, which expands when the molten metal fills the mold, and thus forms "blows" and bubbles. This has not, however, (within the limited experience already had,) been known to render a chill-mold unfit for use. The interior of the ingot always presents metal of a remarkably close and fine appearance, free from fissures or bubbles.

As the sinking head is the last part of the ingot to cool, it will be observed that the "shrinkage" of the mass takes place *upward*. The lines of the ingot admit of such motion readily at all points, excepting at the trunnions; consequently, the upper sections of the trunnion-molds require to be made movable, in order to allow the trunnions to rise with the rest of the ingot. These sections are moved outward as soon as the casting has stiffened, (about a minute after the mold is full.)

The passage of mandrels through the bore enlarges it, and presses back the concentric layers of metal progressively from the bore toward the exterior of the ingot, those next the mandrel, of course, sustaining the most expansion. The last mandrel must have a diameter about two hundredths of an inch greater than that of the finished bore is intended to be, because the remaining elasticity of the metal composing the ingot causes the walls of the bore to spring back somewhat, as soon as the greatest diameter of each mandrel has passed any given point. After the walls of the bore have stretched from 7 to 10 per cent., the amount of this resilience is about two hundredths of an inch in terms of the diameter.

By the passage of the ten mandrels, the diameter of the bore is increased three-tenths of an inch, while that of the exterior of the ingot increases about one-tenth of an inch at the muzzle and five hundredths of an inch at the breech.

It is not found that any condensation of the metal has taken place, the volume and specific gravity remaining appreciably the same after as before the operation. The surface of the bore is, however, greatly hardened by the process, and a thin "test-specimen" taken from its walls, shows an elasticity, tensile strength, and hardness about equal to that of soft steel.

The hardening diminishes rapidly as we proceed from the bore toward the exterior of the ingot, and at a distance of only one-half an inch from the surface of the bore the qualities of the bronze do not appear to have been greatly altered by the mandreling. The important point gained is, however, the surface-hardening, enabling it to bear without too great wear the friction of the copper belts on the projectile.

In shape, the mandrels resemble two short cylinders, joined by a cone. They are made of hard-tempered steel, and so great is the friction attending the process that they wear quite rapidly, appearing to become honey-combed. They are pulled through the bore by means of a hydraulic pump, which is required to exert an effort of about 130,000 pounds.

The arrangement by which the mandrels are attached to the pump is temporary in its character. It would doubtless be more advantageous to push instead of pulling, but the Ordnance Department does not possess a powerful pump, and is compelled to borrow.

After the mandreling is finished, the ingot is found to be somewhat shorter than before the operation; the circumferential stretch of the metal, particularly about the chase, having apparently resulted in a call upon the ingot to give up somewhat of its length. The shortening takes place principally between the trunnions and the muzzle, and amounts in all to about seventeen hundredths of an inch, of which fourteen hundredths occurs forward of the trunnions. These figures have reference to the light gun when the bore is expanded seven per cent.

After the ingot comes from the hydraulic pump, the bore is tested for straightness:

and it is often found bent, usually in the chase, and only a few hundredths of an inch. It is straightened by very careful blows under a steam-hammer. The bending is probably owing to differences in the quality of the metal on opposite sides of the bore rather than to the imperfection of the appliances used in mandreling.

Table showing the mechanical effects of chilling and mandreling upon bronze three-inch howitzers.

Foundry letter of gun.	How cast.	Part of gun from which specimen was taken.	Elastic limit—pounds per square inch of original area.	Tensile limit—pounds per square inch of original area.	Percentage of elongation, measured after fracture.	Specific gravity.	Hardness.
F & G	In sand molds	Muzzle.	15.700	45000	51	8.590	.....
I	In chilled mold	... do ...	19.000	50000	25	8.875	.....
O	Chilled and mandreled	... do ...	35.000	*48000	9½	.....	†0.332
Piece of mild steel taken from a gun-ingot furnished by the Nashua Steel Works, New Hampshire.							.338

* The tensile limit of ingot O was probably inferior originally to that of ingot I.
† Specimen taken from the skin of the mandreled bore.

This method of hardening bronze, which has been adopted in Austria under the name of "steel-bronze," is due to Mr. S. B. Dean, of Boston, who patented it in 1869, several years before General Uchatius's experiments.

NOTE II.—*Profile of threads.*—The French have made a long series of experiments upon the form of breech-closing apparatus under consideration; it was first introduced to their notice by the inventor, (an American,) and was adopted into their naval service.

It has stood the test of actual war, and was used in the heavy naval guns which were placed on the defenses of Paris during the German siege.

All the French naval guns have this form, and numerous experiments were of course made as to the proper pitch and profile of breech screw. A profile similar to that used in our howitzers was finally decided on as being best adapted to resist the thrust of the charge without injury.

In bronze guns it becomes particularly necessary to select a suitable profile for the thread, owing to the ductility of the metal. Should the bearing-face of the thread be made too steep, (or perpendicular,) there will be a probability of serious distortion of the thread under pressure. On the contrary, if the profile be slight, and if the angle formed at the apex of the thread be too obtuse, the plug will have a tendency to "wedge up" on the bearing-faces of the threads of the screw-box, and will, as a result, stick after fire, requiring the expenditure of considerable force on the lever before the breech can be unlocked.

An examination of the faces of the breech-thread, as arranged in the howitzers, will show that a large part of the force exerted to thrust back the plug is thrown toward the base of the threads, and yet the inclination is not sufficient to cause any wedging of the threads of the plug upon those of the screw-box. (See Note V.)

NOTE III.—*Vent-check.*—The vent-check has to sustain considerable shocks in both directions. The primer gas strikes a much stronger blow than would generally be supposed, and of course the pressure of gas arising from the inflamed charge is very great.

The first forms of vent-disk were made of thin, hard steel, and several cracked during practice. They are now made of mild steel, about one-tenth of an inch thick, and have stood very well.

NOTE IV.—*Vent.*—In experimental practice at the navy-yard, Washington, the vents of the howitzers have never become obstructed, excepting on two or three occasions, and then owing to the bursting of the metallic friction-primer tube in the upper end of the vent. To clear this of course does not require any backing of the offset cylinder, but the use of the pliers might become necessary to withdraw the expanded primer-tube.

It is, however, probable that a quill friction-primer will be issued with the guns, in which case of course there will be no obstruction.

If it should, however, at any time become necessary to clear the vent, back the offset cylinder, and insert the boring-bit into the main vent.

NOTE V.—*Lining, &c.*—It is probable that the amount of lining forward required in service will be very trifling.

During the proof-firing of a new gun the plug will always be set back somewhat, as

the thrust of a few rounds is required to bring the bearing-faces of the screw-threads uniformly and closely into contact, but chiefly to give the threads themselves that "permanent set" or slight alteration of profile, beyond which they will not afterward go. This "set" can of course be detected only toward the apex of the thread, and by the application of the "template" after the proof-firing.

In a 500-lb. hardened bronze gun, after seventeen rounds, using 16 ounces of ordinary cannon-powder, the apex of the thread was found to be set to the rear 0″.012. It is probable that this displacement was accomplished in the first two or three rounds.

The threads of the plug showed the same amount of distortion, and as the whole set back of the plug only amounted to 0″.025, it will be seen that the original correspondence of the threads as regard pitch and profile must have been very exact.

It is unlikely that any additional set-back will occur in service, but still it has been considered necessary to provide for such a contingency in the construction of the plug, which otherwise could not be considered as complete. For that reason the nose-plate has been made movable, as described in the text, and "liners" of proper thickness will be supplied.

In order to show how strong the breech-mechanism is against the effort of the charge, it may be permitted to refer to a very exceptionally weak gun, which in experimental firing at the navy-yard, Washington, exhibited excellent endurance.

In this gun the thread in the screw-box had been turned out, and (the diameter of the box being somewhat enlarged, and a fine thread cut on its surface) a "sleeve" was screwed in tightly.

A breech-plug thread of the regular profile and pitch was then cut upon the interior surface of the sleeve, the blanks being afterward cut as usual.

The thickness of solid metal in this sleeve was only a quarter of an inch, and the number of turns of thread in the screw-box was three-fourths of the number used in the service-gun.

Notwithstanding the evident weakness of this sleeve, and the number of turns of breech-thread, the plug was found set to the rear only eleven hundredths of an inch after eighty-four rounds with service-projectiles and cannon-powder of very high initial velocity.

The most of this displacement was due to "flow" of the molecules of the thin layer of metal included between the bottoms of the threads in the sleeve.

This construction labored under another very serious disadvantage: the breech-plug was made of hard steel, the threads upon which, not yielding in the least to the effort of the charge, threw all the change of form upon the weak sleeve and threads of the screw-box.

Had the sleeve been of double its actual thickness, no doubt the "set-back" shown by its threads would not have exceeded five hundredths of an inch, and the gun, even as it is, can still be used for experimental work.

As before remarked, the extensibility of the bronze of which these plugs and guns are made (upward of thirty per cent.) would admit of a large amount of distortion of the thread before fracture could take place. It is, however, not advisable to allow the nose-plate to recede from the Broadwell ring, because in such a case the latter is also set back, and if made of copper is liable to be deformed after a few rounds, if allowed much play. It will continue to check gas well, even after considerable distortion, but is of course eventually rendered useless.

Though the plugs in each class of gun are manufactured to be interchangeable, it will be best in practice, as far as possible, to keep each plug in the gun to the screw-box of which it has become matched by the proof-firing. On this account plugs should be numbered the same as the guns with which they are proved.

NOTE VI.—*Travel of the plug through the collar.*—In its travel through the collar, the lower part of the two lower blanks on the plug rests upon the corresponding parts of the lower collar-lands.

The lower ends of the guide-bolts do not quite reach the bottom of their slots, and the bolts have a play in the slots (sidewise) of about .025 inch each way. If the plug be turned or shaken circumferentially, the ends of the threads will bring up against the sides of the collar-lands, and are thereby prevented from touching the ends of the threads in the screw-box, as the collar-lands are slightly broader than the corresponding threaded sections of the screw-box.

NOTE VII.—*Belt and guide-ring.*—Both the rotation-belt and guide-ring must be firmly attached to the projectile, in order to communicate rotation to the latter without any "slip."

On the exterior of the cylinder of the projectile, and about over its center of gravity, a broad groove or recess is cut $\frac{8}{100}$ of an inch in depth, and as long as the rotation-belt (which it is to receive.) At $\frac{4}{10}$ of an inch from the base of the projectile another groove is cut, of similar depth and a quarter of an inch wide; this is to receive the "guide-ring."

A cold-chisel is then used to nick the bottoms of these grooves all around, at inter-

vals of about ½ an inch; the direction of the chisel-marks being lengthwise of the projectile, and their depth about two or three hundredths of an inch.

Cylindrical rings of copper are cast in sand molds, and of length suitable for making rotation-belts and guide-rings. The interior diameter of these rings is very slightly greater than that of the cylindrical part of the projectile. The thickness of the metal is $\frac{15}{100}$ of an inch.

The rings are then slipped over the projectiles and squeezed, (or permanently compressed,) by a screw-press, into the grooves prepared for them. This operation not only fills the grooves completely and makes the rings hug the body of the projectile, but also forces the copper slightly into the marks left by the cold-chisel at the bottom of the grooves; thus powerfully assisting to prevent any possibility of the belt slipping circumferentially upon the projectile. The projectiles, with their rough belts and rings on them, are then centered in the lathe, and the bearings are carefully turned down to the diameters and profiles given on the drawings.

The experimental projectiles have been all turned on the exterior, and it is probable that this practice will obtain with service projectiles, at least as far as the cylindrical part is concerned. The windage in the bore being small, ($\frac{3}{100}$ of an inch all around,) it is of course necessary to have the body of the projectile "true," and accuracy of flight is also promoted thereby.

After the projectiles are finished, they are inserted into a sort of cylinder-gauge, which has on its interior a compression-slope exactly like that in the chamber of the gun. This gauge is cut of such a length that if the rotation-belt has been correctly made and placed, the base of the projectile will just come even with the top of the gauge.

It must be observed that the grip of the rotation-belt on the projectile is very much increased when the gun is fired, as the squeeze due to driving the shot through the compression-slope of the gun powerfully assists to bind the belt firmly to the projectile. Experiment shows that this pressure is much greater than that received by the belts from the screw-press; a belt has never yet been known to slip upon a projectile when fired through the gun.

The central rotation-belt, when squeezed in the compression-slope, has the merit of supporting the walls of the projectile at its weakest point against the upsetting effort of the powder-gas.

The diameter of the bore in these guns being large when compared with the weight of the projectile, the walls of the shrapnel are made only three-tenths of an inch thick, in order to admit of a sufficient number of balls being used without increasing weight too much. Were it not for the support derived by the middle parts of the projectile from the squeezing of the belt against the walls of the bore, the pressure of the powder-gas against the base, when the shot is driven into the compression-slope, would often cause the walls of the cylinder to swell out and burst, sending the projectile from the gun in a shower of pieces.

This has often happened in the course of experimental work, where non-supporting forms of belt were used with thin and heavy projectiles. When recovered from the butt, the pieces that formed the cylinder toward its middle part show upon their exterior distinct impressions of the ribs of the gun, making evident the fact that the projectiles were swelled outward and pressed against the walls of the bore.

In the form under consideration, it is thought that the tendency to swell out and burst along the parts of the cylinder in rear of the rotation-belt is repressed by the pressure of the powder-gas, which is freely admitted to those parts of the projectile in rear of the belt. One of the reasons for keeping the guide-ring less in diameter than the chamber into which it is loaded is to afford free and instant passage for this supporting gas to the after part of the cylinder of the projectile.

As the inclination of the compression-slope is very small, (one in fifty,) a slight amount of residuum upon the ribs of the gun at that point will suffice to set the projectile back in the bore a considerable distance; and as it may be desired to fire the gun a number of rounds, at critical moments, without cleaning the chamber, it becomes important to know how far forward of the cartridge the shot must stand when the gun is clean, in order to allow space enough for "set-back" on fouling of the bore from omission of sponging.

Experiment with the heavy gun showed that when the sponge is not being used the position that the projectile will occupy in the chamber varies from one round to another between one-tenth and four-tenths of an inch. After the third round the set-back of the projectile did not increase beyond four-tenths, and about three-tenths could be taken as the average.

The light gun, having a less amount of powder in the charge, shows rather less fouling than the heavier gun; and when a metallic cartridge is used, the residuum left in the chamber of each class is somewhat less than that shown when using the serge bag.

When *bronze* howitzers are first issued for service they will show a less interval between cartridge and projectile than that referred to above. If after some service the slopes do not seem to show much wear, the chambers will be reamed deeper.

NOTE VIII.—*Fuses.*—Quite a number of fuses have been experimented with in connection with these howitzers.

The first form was a small percussion fuse, having a plunger in the interior of the stock, somewhat like that used in a Schenkl fuse; but the nipple on the head of the plunger was not furnished with a percussion cap like those of the fuses just mentioned. A hole was pierced from the nipple through the axis of the plunger; this hole was filled with grained powder. (Plate V, Fig. 1.)

Into the upper part of the stock was screwed a bronze cap which contained fulminate in a shallow recess cut upon its under face.

The plunger was held away from the fulminate by a small brass screw inserted into it through the side of the stock in a manner similar to that adopted in the Schenkl fuse. The fulminate cap, which was removable from the stock, was intended to be kept separate from the projectile when the latter would not be soon in use. When preparing for service a sufficient number of the caps were to be screwed into the fuses in the shells.

This fuse worked well, and would usually explode the shell on contact with water when the elevation was over five degrees, but as a time-fuse was considered as very desirable, particularly for use with the shrapnel, attention was turned to trials in that direction.

The first form of time-fuse tried had the composition disposed somewhat in the same manner as it appears in the service Bormann fuse—an igniter was placed in the center of the composition circle. The disk into which the composition was pressed was, however, movable around the axis of the fuse-stock, and could be set to any desired time, within the range of the fuse-composition. The under side of the circle of composition was not covered, and communication was had with the magazine through a hole which lies within the path passed over by the exposed circle of the composition while turning. (Plate V, Fig. 2.)

The fuse-composition was lighted by an igniter, placed in the axis of the vertical part of the stock, and in the center of the circle of composition. The plunger carried fulminate on its lower face. It was held up from the frictional point by two arms, which were intended to be broken by the sudden starting forward of the projectile on discharge of the gun. The plunger, being delayed by inertia, would be struck on the fulminate by the advancing point in the stock. The resulting detonation communicated flame to a powder channel, which filled the flash-chamber with gas, and through the hole made for the purposes inflamed the fuse-composition. This hole was continued through to the exterior of the movable part of the fuse, and formed the vent for the gas arising from combustion of the composition.

The plunger was kept in place, and its upper part was covered by a cap, which also pressed upon the movable and rotating part of the stock, and was intended to be screwed down tightly after the fuse was set for the desired time; thus the two parts of the stock were clamped firmly together.

It was soon found that this fuse would not work satisfactorily; the gas pressure in the composition groove forced the two parts of the stock apart, and the flame flashed quickly around the under side of the composition circle, firing the magazine on short time. Efforts were made to obviate this by covering the lower surface of the composition with foil and other material, but the action was never satisfactory. The column of composition was a little smaller in cross-section than that of the service Bormann fuse.

The next form seemed to promise better results. The stock was of hardened lead, and was formed in one piece, having a flash and an ignition chamber in the center. Around this was pressed the circle of composition of the same form and volume as that of the service Bormann fuse, but (unlike the fuse just described) a "horseshoe" in this case covered the composition permanently, and was intended to prevent the flame from flashing around the circle in advance of the regular time. (Plate V, Fig. 3.)

One end of the composition was connected with the magazine by a passage, and the other end was blocked off as usual in Bormann fuses.

The composition-cylinder was divided on its circumference into time spaces. The plunger, which was considerably enlarged from that first described, was suspended to the cap by a zinc pin, which was to be broken by inertia on discharge of the gun. The plunger also carried fulminate on its lower face, and was furnished with powder-flash channels.

The top of the plunger was covered and protected by a cap, which screwed into the walls of the flash-chamber.

To prepare the fuse for use, pierce directly through the stock and composition into the flash-chamber, on a horizontal line, and at the required time mark, as shown by the arrow.

The discharge of the gun broke the arms of the plunger, which struck the advancing nipple; the fulminate was fired, and the powder in the channels ignited and filled the flash-chamber, finding its way through the vent bored, and igniting the composition, which burned both ways until the magazine was reached by the end connected

PLATE V.

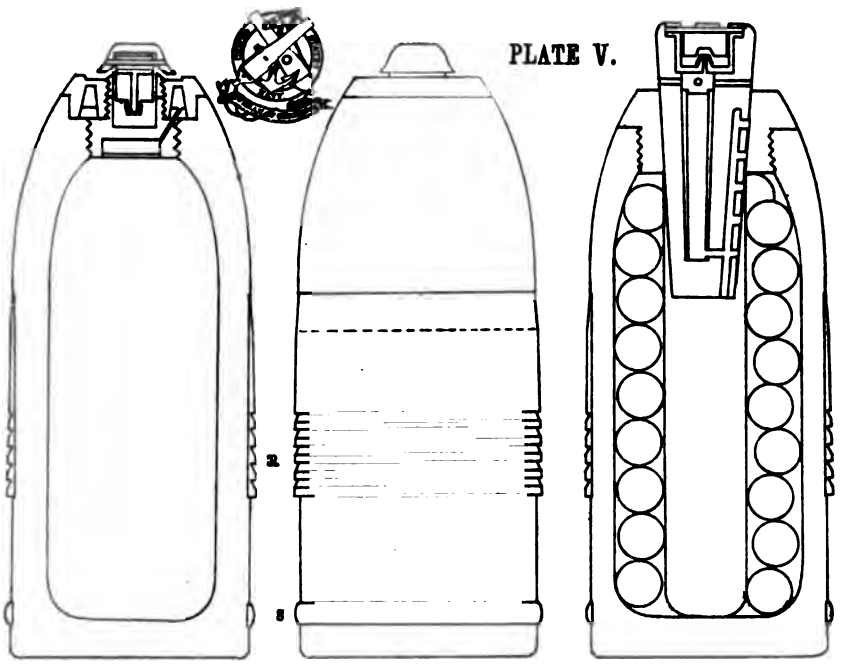

Fig. 1.

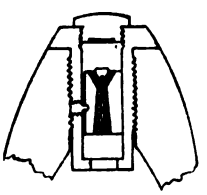

Fig. 2.

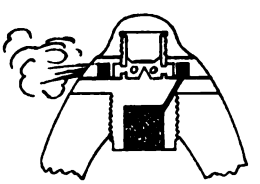

Fig. 3.

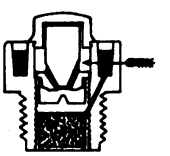

Fig. 4.

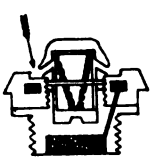

Fig. 5.

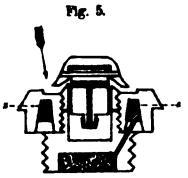

Fig. 6.

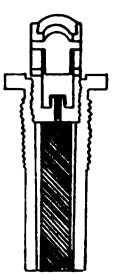

Fig. 7.

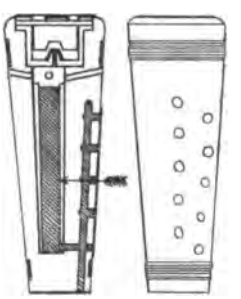

Scale of inches

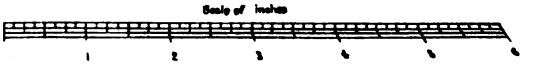

therewith. This fuse was simple, and appeared practical, but it could not be brought to show the necessary amount of regularity. The horseshoe being inserted from the upper side was frequently started upward by the action of the boring-tool, and the gas arising from the composition was then enabled to partially lift the shoe, and the fuse thus became very liable to premature ignition of its magazine. The action of the igniter was almost perfect, and the difficulty seemed to be altogether with the column of fuse-composition.

A minor defect of this form was the effort required to bore through the walls of alloy, and across the fuse-composition, before the flash-chamber could be reached.

The thickness of the walls could not be decreased, or bursting from internal pressure or melting from heat developed by the burning composition would have resulted; and in case the lead had been further hardened, and the thickness of walls had been reduced, the difficulty of boring would have been increased.

A change was then made in the form of the fuse-stock, with the object of reducing it in size, and also of changing the horse-shoe to the under side of the composition-cylinder, where some mechanical pressure could be put upon it to keep it in place. (Plate V, Fig. 4.)

The stock in this case is of bronze, with the composition-cylinder (of hardened lead) screwed down upon it, so that the horseshoe (now inserted from below) should bear firmly against the face of the stock.

It was also thought that the composition could be more easily pierced from the top of the fuse (as in the service Bormann;) the tool would thus be required to pierce a less quantity of lead than before, and would not be driven through the composition, and thus breaking and cracking of the latter would be avoided. (See arrow.)

The igniter remained the same as last described.

As the composition was to be exposed at a point on the upper face of the fuse, it became necessary to conduct the inflamed gas from the flash-chamber to that face. This was done by piercing holes through the cylindrical part of the cap, under the shoulder, thus allowing the gas imprisoned in the flash-chamber to rush out and impinge upon the upper face of the fuse. Experiment showed that the volume and momentum of this gas was amply sufficient to ignite the composition. The *direction* of these gas-jets was determined by boring the holes in the cap at an angle, so as to throw the flame downward upon the face of the fuse, while the shoulder or rim raised around the outer edge of the time-face was partly intended to bank the flame somewhat within the circle lying immediately above the fuse composition, and partly to prevent the point of the piercing-tool (when hurriedly used) from slipping out of its proper place over the composition.

The cross-section of the composition was reduced to about one-half that formerly used, with a view to reducing size of fuse, and also heat developed.

This form of fuse was not quite as simple as that previously described, but seemed to promise a solution of the defects that had been before observed. The igniter worked well, and the flame from under the cap would ignite the composition readily. The composition burned quite well up to five seconds, but the time could not be carried beyond that point with any certainty of obtaining explosion of the shell, the composition appearing, as it were, to be smothered on the longer times.

The cross-section of the column of composition was next made equal to that of the service Bormann fuse, it being hoped that the increased volume of gas might improve the burning on times beyond five seconds; at the same time the flange or shoulder of the bronze stock was dispensed with, and the "horseshoe" over the composition was kept from moving by being pressed against the flattened nose of the shell itself when the fuse was once screwed into place. The fulminate recess in the lower part of the plunger was suppressed, and was replaced by a nipple, which held a percussion-cap. The powder-channels in the plunger communicated with this nipple. These changes resulted in the form shown. (Plate V, Fig. 5.)

Finding that it was still impossible to carry the burning composition with uniformity beyond five seconds during flight, it was thought that perhaps the gases were choked or confined by pressure of air on the point of the shell, and needed other vents than the one made by the piercing-tool at the initial point. Vents were accordingly bored at intervals, inward from the edge, (xx, Fig. 5,) so as to touch the column of composition. By this device the longer times were carried with somewhat increased uniformity; but the chief defect still remained, and led to the temporary abandonment of the fuse.

Fuses on the Bormann plan having thus far failed to give satisfactory results, an attempt was made to use the straight column of composition, as shown in the ordinary Navy time-fuse.

The water-cap was removed from the time fuse stock, and an igniter (similar in principle to that last described) was screwed into its place. Thus arranged, the fuse of course would only burn for the full time for which it was pressed, and no simple or practical means existed for setting the fuse to intermediate times.

At first the vents for the escape of gas from this fuse led upward, outside of the screw-

housing of the igniter; but it was found that unless a short and direct means of escape were given to the gas in a lateral direction, (*i. e.*, not exposed directly to the pressure of the air, as it would have been if escaping from the top of the stock,) the residuum deposited by the gas soon clogged up the vents and smothered the flame, or else caused it to burst through prematurely. A change was, therefore, made, and the gas vents were led as shown. (Fig. 6.)

Not many experiments were made with this fuse; it was only considered as a makeshift, and not being capable of being set on any given time, it did not long attract attention.

Attention was next turned to the wooden stock, which can be pierced through the side for intermediate times. Beech was found suitable for the purpose, and the stock was coned on the outside. (Plate V, Fig. 7.)

A coned composition-channel was bored into this stock parallel to the axis, but one-tenth inch distant from it. This channel received the paper-case fuse, which was somewhat less in diameter than the regulation Navy time-fuse.

Just above the upper face of the fuse composition was an unoccupied space from which four gas-vent channels led to the outside of the stock above the point of the shell.

Immediately above this gas-vent chamber the bore of the stock was considerably enlarged to receive the igniter. This consisted of a small bronze hollow cylinder, closed at the lower end, where it was furnished on the inside with a pierced nipple for percussion cap. The upper edge of the hollow cylinder was flanged in such a manner as to rest on top of the stock, thereby preventing the igniter from being driven bodily into the fuse on discharge of the gun.

Inside of this hollow cylinder the plunger was hung on a brittle wire, (half copper and half lead.) When this arrangement was in place the head of the fuse was covered with a piece of paper or linen luted down and shellaced. Thus far the fuse only burned for the full time for which it was pressed. In order to provide for intermediate times, two side channels were bored from the lower end of the fuse upward, (one of these is shown in the figure.) Holes bored at equal intervals from the outside of the stock connect the exterior of the fuse with the side channels, the lowest communicating hole in each channel being bored entirely through to the fuse composition. The channels were filled with mealed powder and paper pasted over the exterior of the communicating (or time) holes, which were arranged as shown in the plate. The upper and lower ends of the stock were served with brass wire.

This fuse (which is virtually the English Boxer) works as follows: With a suitable tool pierce through the communicating hole (which corresponds to the number of seconds desired) into the column of fuse-composition, (see arrow,) then push the fuse by hand (giving it a slight twist) into the nose of the projectile and load the gun. On explosion of the charge the igniter acts as usual, and the fuse-composition runs down to the point at which it was pierced. Then the flame flashes into the side channels, down the latter to the lower communicating hole, and thence to the bursting charge.

If for any reason the flame should not pass through the hole bored at the desired time, the fuse would still act at the end of its time of burning by igniting the charge through the lower communicating hole. If the shell strikes the object before sufficient time has elapsed to enable the composition to burn to the lower end, it is probable that the stock would be split and the whole be driven inward; in which case it would act as a concussion fuse.

This fuse performed well during experiment, but still did not burn as regularly as could have been desired. About two-thirds of the number tried did not vary, in burning, over a half a second, more or less, from the required time. The other third were irregular in their performance, showing, occasionally, as much variation as a second and a half. The fuses heretofore made have been pierced with side holes, only to whole seconds, running up to ten. It is proposed to try (for ordinary shrapnel ranges) a five-second fuse pierced to half seconds.

During the course of this work some trials were made of columns of fuse composition pressed after an Italian method. The composition is pressed (by hand) into a lead pipe considerably greater in diameter than the finished column is intended to be. The pipe is then passed through rolls, and is reduced gradually to the size desired; this, of course, resulting in a lengthening of the composition-stick. This proceeding packs the composition very uniformly, and when burned by hand equal lengths burn in equal times with great regularity.

This column has been tried in the wooden-stock (or Boxer) fuse, but did not succeed well. The lead pipe was too thick and heavy, and, by virtue of inertia, swept through the bottom of the stock into the interior of the shell on discharge of the gun, and this notwithstanding the fact that the pipe was somewhat coned on the outside by hand. It is thought, however, that further experiment will be made in this direction.

This composition column has also been used in the fuses on the Bormann principle (figured at 3, 4, and 5, Plate V.) It improved the regularity of burning of the fuse, but the performance was still unsatisfactory.

The Italians use the pipe in a fuse somewhat similar in plan to a combination of Nos. 2 and 3, but with what degree of success is not known.

No satisfactory fuse for shrapnel has been devised abroad or in this country. During the Franco-Prussian war the Germans used percussion-fuses exclusively; the French, time-fuses. Both were dissatisfied with the results and have since been experimenting; Germans on time-fuses, French with percussion.

NOTE IX.—*Metallic cartridges.*—During the elaboration of this armament, extended experiments were made with metallic cartridges. At one time it was intended to use for the charge of the gun a cake of compressed powder, which required a metallic case to properly develop its advantages. (Plate III, 47.)

This cake consisted of a hollow cylinder of powder, the grains of which were agglomerated (under a pressure of fifteen tons) sufficiently to bear transportation in the ammunition-boxes. It was intended to be ignited on the interior walls, and to burn from thence, on an increasing surface, toward the exterior, the rapidity of combustion of different charges being readily controlled by the amount of pressure used in making up the cake.

As compared with equal weights of loose cannon-powder from the same lot these cakes had slightly the advantage in range, and in uniformity of results, but not on the whole sufficient to weigh against the objections of increased expense, and of the undue elaborateness of such special ammunition. The compressed charge was therefore abandoned, and with it the necessity for metallic cases ceased.

Nevertheless, it is important to preserve the knowledge that has been acquired in the course of these experiments, because an efficient accelerating cake, or built-up charge, may at any time be brought forward, and in such an event the stiff metallic wrapper may be of special importance.

Early in the course of these experiments it was found that to produce a simple and efficient case would be a matter of considerable difficulty, and that small variations in the character of the material used, and in the method of assembling the parts, made great differences in the behavior of the case when subjected to the test of firing.

The principal accidents which occurred to the early and imperfect forms of cases were as follows:

First. The permanent expansion of the cylindrical part of the case against the walls of the powder-chamber, while the base cups were firmly held in the extractor-recess.

Second. A separation of the base cups from the cylindrical part of the case, the former being found more or less deformed at or near the extractor-recess, while the latter would be either permanently expanded against the walls of the powder-chamber, or else entirely crushed up in the bore.

Third. The punching of the base-cups by gas pressure, immediately over the interior orifice of the vent. This accident is followed by a rush of gas from the vent, the same as though a "check" at that point had not been attempted.

Fourth. The "shearing" of the tin cylinder circumferentially (from internal gas pressure) over the upper edge of the inferior cup; in short, this frail case being required to withstand an enormous pressure from the inside, gave way wherever there occurred a weak or unsupported point, and the gas instantly forced its way out.

The occurrence of the first of the accidents just mentioned usually rendered the unlocking of the breech extremely difficult, and, indeed, any imperfect action of the case was generally indicated by more or less opposition to unlocking.

It was found that defects of the class first mentioned arose from two causes: First, the cylindrical form of the powder-chamber. This was afterward changed to a truncated cone of very slight inclination. The second cause was an insufficient coning of the cartridge-case itself, whereby the solder seam on the body was not given a proper opportunity to split. It was found that, when this split did not occur, the case usually stuck in the gun. In order to facilitate splitting, it was found necessary to use as little solder as was consistent with a proper closing of the seam.

Defects mentioned under the second head were caused by the primer-gas issuing from the interior orifice of the vent in the plug, and driving the case too far forward into the powder-chamber. The force of the blow delivered by the primer-gas is much greater than would be supposed, and is more than sufficient to drive the case close up to the base of the projectile. The case being thus driven forward and its charge ignited, the cylinder became permanently expanded, and stuck at the point at which the case had arrived, while the base-cups were pushed backward (by the longitudinal thrust) into the extractor-recess, or else the separated parts, being too slow in their motions, allowed the gas to get behind them, in which case all were crumpled up and deformed, and usually left in the chamber too hot to be touched by the hand.

Finally, around the exterior cup a bead was raised, which, by bearing against the rear edge or knuckle of the powder-chamber, prevented the case from being driven forward, and obviated the above-mentioned difficulty.

The third defect mentioned merely required the strengthening of the metal over the interior orifice of the vent. This was done by introducing through the base-cups, over

the orifice of the vent, a rivet, the head of which gave the metal of the base-cup sufficient support against the punching effect of the powder-gas.

The fourth defect was finally remedied by raising the rim of the inner base-cup somewhat above that of the outer cup, thus interposing a layer of sheet-brass between the tin cylinder and the gases at the point where the former often sheared across the edge of the outer cup.

For a long time the various parts of the cartridge-case were joined to each other by drops of solder, but it was finally concluded to dispense with the solder, and to crimp the inner cup and the tin cylinder into the groove made on the interior of the outer cup by the beading.

This simple arrangement held all parts firmly together, and the case so assembled, and made of material of good quality, will bear all the pressure it should be called upon to sustain, and will extract with certainty.

It is very important in bronze guns using metallic cartridges that the cases should not burst, because the gas rushing violently from a leak will soon score the shoulder or edge of the powder-chamber badly.

A small gutter being thus established, and support being withdrawn from the case at this point, future failures are almost certain to take place at the same spot. Thus the face of the chamber is soon badly cut out, and will require either to be reamed forward or to have the holes filled, either being an undesirable process.

Standard drawings and patterns of the metallic case in its latest form are preserved at the ordnance department, Washington navy-yard.

The charge within the metallic case is ignited as follows: A disk, having a vent in the center, is soldered to the base of the outer cup, and the flame from the primer passes through it, and then through four ignition-holes pierced in the base-cup proper. The space between the ignition-holes is strengthened by the insertion of the rivet, the head of which, overlapping the edges of the vent, becomes a sort of "vent-check."

Before the introduction of the hardened bronze gun, leaden belts were used on the projectiles, and a lubricant was necessary to partially prevent "leading" of the bore. The cake of lubricant was half an inch thick, and was placed on top of a layer of paper over the powder. It was then covered with pasteboard, and the points of the metallic case were turned over the whole. The lubricant consisted of a mixture of tallow and oil. The same lubricant was also used in a groove on the rear belt of the projectile, and was retained in place by a few turns of yarn.

There is, of course, no vent-check or Broadwell ring used with the metallic case, as the functions of both of these are performed by the case itself.

NOTE X.—*Powder-gas pressures and range.*—Pressure indications have been obtained chiefly with the light gun. The instrument used was a very small pressure-piston, the impression-face being a re-entrant spiral, (area, one-sixth of a square inch.) This was placed in a housing, and was screwed into the forward face of the plug, the top of the housing being nearly flush with the bottom of the nose-plate recess. It was necessary to unscrew the housing after each round and extract the pressure-disk which was made of annealed copper.

The following table shows the principal results thus far obtained:

Table of pressures observed in the bores of 3-inch howitzers.

Gun.	Kind of powder.	Feet by gun-pendulum.	Weight of charge.	Weight of projectile.	Number of rounds observed.	Average pressure.	Average difference from the mean.
			Oz.	*Lbs.*		*Lbs.*	*Lbs.*
Light	Ordinary C. P	1,526	12	7	11	18,150	1,250
Do	do	1,526	12	8	12	19,170	970
Do	Large grain, old rifle	1,470	12	7	10	13,230	950
Do	do	1,470	12	8	2	15,100	.....
Heavy	Ordinary C. P	1,526	16	8	2	22,500	.....

It was only possible to obtain two pressure-indications from the heavy gun for want of a suitable breech-plug to use with the gauge.

An examination of the classification of the powders by the gun-pendulum, as compared with the corresponding pressures and "difference from the mean," will show how much more moderate and uniform is the action of the large-grain powder in the gun than that of the quick C. P.

Judging from the tabulated record of the light gun, it is probable that the pressure

the bore of the heavy gun, when using the larger-grained powder and 8-pound proctile, will be about 19,000 pounds. In connection with the foregoing table an examation of that in the latter part of this note will show that the large-grain powder ies nearly as well at 5° elevation as the smaller grain, but with much less strain on ie gun.

In most of the practice at the navy-yard, Washington, the quick small-grained cannonowder was used, because the object of the experiments was usually to strain the reech-closing apparatus, and also the projectiles and metallic cartridges, as much as ossible. Under such treatment defects often appear that would not otherwise be etected.

Ranging is done at the experimental battery, Annapolis, Md., and thus far that tablishment has been able to use only a steel howitzer of the light pattern. A few ! the ranges, &c., obtained from this gun are given in the annexed table, and include ie jump of the field-carriage, which has not yet been accurately determined. It operies, however, to increase the range over that due to the elevation by quadrant.

The action of the projectile was observed by plane-table over water; not as accurate method as that in which screens are employed.

The light gun is a more powerful piece than the English steel 7-pounder boat-gun, or ie French naval *canon de quatre*. The projectile of the latter weighs nearly nine ounds.

able of ranges, deflections, muzzle-velocities, &c., of 3-inch howitzer shells, weighing 7 pounds.

GUN—STEEL HOWITZER, A.

Kind of powder.	Kind of case.	Elevation.	Mean range.	Mean reduced deflection.	Mean time of flight.	Muzzle-v e of shell.
		Deg.	*Yards.*	*Yards.*	*Seconds.*	*F et.*
dinary C. P.	Metallic	1	761	2.1	2.5	1,094
Do	do	2	1,095	2.7	3.65	1,094
Do	do	3	1,400	2.0	4.65	1,094
Do	do	4	1,662	2.2	5.63	1,094
Do	do	5	1,940	4.7	6.65	1,094
Do	do	7	2,440	3.1	8.81	1,094
Do	do	10	2,933	9.9	11.47	1,094
Do	Serge	5	1 934	1.8	6.7	1,069
Do	do	7	2,361	2.2	8.52	1,069
Do	do	10	2,972	3.1	11.42	1,074
arge grain, old rifle	do	5	1,927	2.3	6.54	1,071

The experiments for range and accuracy of the heavy gun are now going forward.

NOTE XI.—*Wear.*—The amount of wear shown by the bores of these guns is a very portant point, and has met with such attention as could be given it in the course of anufacturing.

The rear part of the bore is not on the whole as hard as the chase and muzzle parts, ecause the metal composing the former, being originally a larger mass, is not relavely as much chilled, and would not, consequently, be as much hardened, as the latter y the same amount of mandreling. In some of the guns the wear at first has been ightly more rapid at the rear end of the bore than at the other parts. As the firing roceeds the wear appears to become more uniform along the whole length of the bore.

The wear will of course vary with the quality of the metal composing each particuar gun.

When the guns are new the surface of each rib is beautifully smooth, and remains o after firing, notwithstanding that the bore may be somewhat worn.

The copper belts on the projectiles are much hardened by forcing through the comression-slope, and an attempt has been made to ascertain the amount of this hardeng by impressing with a small indenting knife the belts of some of the projectiles reovered after having been fired through the bore. A constant pressure of 1,000 pounds vas used upon the knife.

It was found that the forcing had increased the hardness of the copper belt (where he latter had been pressed directly under a rib) about one and one-half times, and the ardness of the metal where it had squeezed from under the ribs and filled the grooves was only a trifle less.

By the same system of comparison, a "skin specimen" taken from the expanded bore of one of the guns (R) showed somewhat harder than the forced belt of the projectile.

The following table, though compiled from the records of different guns, (of c varying somewhat in original quality of metal,) may be accepted as exhibitin rate of wear that will probably be shown in service. The table of comparative ness of bore and belts is appended, to which are added some tests of steel, &c.

The Nashua howitzer referred to is very mild and soft in quality; too much s an efficient service-gun of any large size. The chrome steel specimen was only s

Table showing the amount of wear observed in the bores of hardened bronze howitzers after

LETTER OF GUN, Q.

Rounds.	Enlargement.		Chase muz
	Near seat of projectile.	About Trunnions.	
	Seconds.	*Seconds.*	*Secon*
From round 33 to round 58	0.000	0.001	
From round 58 to round 73	0.002	0.002	
From round 80 to round 130	0.003	0.003	

Exhibit of the comparative hardness of expanded bore of bronze 3-inch howitzer; of be projectile before and after being forced, &c.

Metal.	Length of cut made by a pressure o pounds on the indenting knif	
	Seconds.	
Surface of bore of ordinary bronze gun, (C, 500 pounds)	0.270	Mean hardness between l and muzzle.
Skin of hardened bore of gun, (R, 350 pounds)	0.223	Do.
Copper belt on projectile before being fired through gun	0.423	
Copper belt on projectile after being fired through gun	0.249	
Hardness shown by a specimen of ordinary wrought-iron	0.217	
Hardness shown by a specimen of steel howitzer, (Nashua No. 1)	0.242	
Hardness shown by a specimen of bar chrome steel, (No. 2)	0.177	

Manufactures and preparations at the various navy-yards for the year ending June 30,

ARTICLES UNDER PROPORTION TO EACH GUN.

13 shell-whips.
16 turret-whips.
11 XI″ preventer-breechings.
2 sets 60-pounder-gun gripes.
4 sets XI-inch-gun gripes.
4 sets IX-inch-gun gripes.
343 swabs.
30 XI-inch sabots.
8 supply-boxes.
21 primer-boxes.
24 XI-inch shrapnel.
485 IX-inch shrapnel.
50 60-pounder shrapnel.
9 100-pounder shrapnel.
7 XV-inch shrapnel.
30 32-pounder shrapnel.
30 30-pounder shrapnel
5 XV-inch shrapnel, L. & F.
30 32-pounder shrapnel, L. & F.
71 60-pounder shell.
9 100-pounder shell.
309 XI-inch shell.
601 IX-inch shell.
46 XV-inch shell, L. & F.
130 32-pounder shell.
130 32-pounder shell, L. & F.
78 30-pounder shell.
144 20-pounder shell.
40 20 pounder shell, L. & F.
110 IX-inch sponge-caps.
16 XI-inch sponge-caps.
6 60-pounder sponge-caps.
5 XV-inch sponge-caps.
1 X-inch sponge-cap.
1 60-pounder carriage.
16 shell-stands.
5 transom-quoins.
2 60-pounder chamber-scrapers.
2 60-pounder bore-scrapers.
3 XV-inch bore-scrapers.
4 XI-inch tampions.
38 IX-inch tampions.
26 IX-inch tampions and wads.
4 60-pounder tampions.
6 XV-inch tampions.
3 XV-inch tampions and wads.
2 20-pounder tampions and wads.
1 X-inch tompion and wads.
16 port-bridles and tricing-lines.
56 gun-tackles.
18 heavers for selvagees.
54 division-boxes.
3 stationery-boxes.
6 division-tubs.
6 fire-tubs.
1 XI-inch ladle.
1 IX-inch ladle.
3 XV-inch ladles.
1 X-inch ladle.
2 20-pounder ladles.

2 dark-lanterns.
14 XI-inch muzzle-bags.
9 XV-inch muzzle-bags.
6 IX-inch muzzle-bags.
4 60-pounder muzzle-bags.
2 20-pounder muzzle-bags.
3 shackle-pin punches.
84 chocking-quoins.
100 lock-springs.
72 lock-lanyards.
8 lock-aprons.
53 lock-apron straps.
232 fire-bucket lanyards.
4 VIII-inch roller-handspikes.
72 roller-handspikes.
6 20-pounder roller-handspikes.
10 20-pounder ordinary handspikes.
33 IX-inch rammers.
3 XV-inch rammers.
6 XV-inch rammers, sectional.
1 X-inch rammer, sectional.
153 wash-deck chocks.
292 port-lanyards.
25 port-lanyard hooks.
6 60-pounder vent-compressors.
2 150-pounder passing-boxes.
9 100-pounder passing-boxes.
8 32-pounder passing-boxes.
5 XV-inch passing-boxes.
4 XI-inch breechings.
38 IX-inch breeching .
23 60-pounder breechings.
2 20-pounder breechings.
35 thumb-stalls.
26 IX-inch woolen sponge-covers.
35 XI-inch woolen sponge-covers.
8 60-pounder woolen sponge-covers.
2 100-pounder woolen sponge-covers.
1 32-pounder woolen sponge-cover.
1 20-pounder woolen sponge-cover.
10 XV-inch woolen sponge-covers.
42 port-bridles.
23 shell-stand braces.
67 side-tackles.
5 train-tackles.
2 60-pounder Marsilly carriages.
26 IX-inch carriages.
Iron-work:
150 shell-plugs.
5 roller-handspike castings.
1,026 IX-inch-shell boxes.
1 XI-inch-shell box.
4 32-pounder-shell boxes.
1 axle for gun-carriage.
2 housing-straps.
8 sets 60-pounder castings.
40 60-pounder breeching-thimbles.
16 IX-inch breeching-thimbles.
4 20-pounder breeching-thimbles.
6 breeching shackle-pieces.
6 breeching splice-pieces.
2 sets breech shackle-bolts.
29 pivot-bolts.
52 eyebolts.
2 ring-bolts.
4 light bolts.
63 bolts.
63 nuts.
6 pairs friction-chocks.
16 division-bags.
6 shell-box covers.
22 XI-inch trunnion-rings.
9 60-pounder directing-bars.
1 breech-plug.
1 Broadwell ring.
1 XI-inch buffer-carriage and deck-circles.
2 sections of IX-inch shell.
2 sections of IX-inch shrapnel.
4 extractor-hooks.
78 handspike-hooks.
3 turret-sights.
1 XI-inch gun, side-sighted.
2 60-pounder friction-chocks.
8 XV-inch vent-drills.
8 XV-inch trunnion-ledges.
1 XV-inch loading-ladle.
15 XV-inch boring-bits.
3 XV-inch breech-sight aprons.
5 XV-inch priming-wires.
2 XV-inch (sets) vent-punches.
3 XV-inch worms.
1 20-pounder worm.
2 cartridge-bag formers.
2 XV-inch gauges.
5 shot-tongs.
4 metal blocks for whips,
2 cranks for XV-inch carriage.
8 XI-inch metal blocks.
8 IX-inch metal blocks.
4 sets hoops and heads, XV-inch powder-box.
6 XV-inch sponges, (sheep-skin.)
1 X-inch sponges, (sheep-skin.)
2 XV-inch sponges, (bristle.)
4 shell-loaders, (XV-inch.)
10 junk-wads, (XV-inch.)
50 selvage-wads, (XV-inch.)
1 star-gauge ring, (13½-inch, W. P. F.)
1 star-gauge point.
6 XV-inch rear sights.
6 XV-inch rear-sight covers.
12 XV-inch rear-sight bolts.
12 XI-inch rear-sight bolts.
12 XI-inch rear-sight covers.
6 XV-inch front sights.
12 XV-inch front-sight screws.
6 cannon-locks.
6 cannon-lock bolts.
2 20-pounder bronze carriages.
2 20-pounder breast-pieces.
8 20-pounder beckets.
1 XI-inch breech-loading rocket-gun.
63 plugs.
3 thimbles.
1 set fitting-lamp.
1 lever gun-carriage.
1 XV-inch sponge section-staff.
1 sub-caisson, painted.
1 sub-carriage and slide, painted.
1 X-inch rammer, painted.
1 X-inch worm, painted.
1 shot-tong, painted.
1 shot-ladle, painted.
1 former passing-boxes, 8-inch rifle.
51 handspike shoes.
200 handspike-shoe rivets.
1 XI-inch carriage and slide, complete

HOWITZERS, EQUIPMENTS, ETC.

198 12-pounder-rifle shell.
214 12-pounder heavy shell.
18 12-pounder light shell.
90 12-pounder heavy shrapnel.
156 12-pounder light shrapnel.
18 12-pounder heavy canister.
2 12-pounder clamps.
100 ammunition-rings.
1 set boat-skids.
4 sets boat-tracks.
27 12-pounder sponge-caps.
6 shoes for howitzer-wheels.
30 12-pounder tampions.
7 boat-chests.
6 12-pounder woolen sponges.
5 24-pounder passing-boxes.
96 3-inch breech-loading howitzer passing-boxes.
62 caisson-boxes.
Iron-work:
6 wads.
10 12-pounder Schenkl shell.
1 canvas cover for Gatling gun.
14 breech-sights.
25 field-carriages.
16 bronze howitzers.
4 nose-plates.
34 nose-plate screws.
19 gas-checks.
15 elevating-screws.
1 double elevating-screw.
4 elevating-screw pins.
1,567 3-inch breech-loading howitzer shells.
300 breech-loading howitzer cartridge-cases.
4 boat-carriages.
1 boat-carriage, altered.
10 3-inch breech-loading howitzer rammers.
10 3-inch breech-loading howitzer sponges.
520 3-inch breech-loading howitzer cartridge-bags.
200 metal-case cartridges.
26 breast-lashings.
9 drag-ropes.
10 sponge-covers, (sheep-skin.)
14 3-inch breech-loading howitzerh ersacks.
94 howitzer-wheels.
16 howitzer-wheel boxes.
33 sponge-buckets.
8 hoops and heads.
4 steel howitzers.
1 gas-escape vent.
56 rail-sockets for Gatling gun.
700 sabots for 3-inch shell.
25 3-inch breech-loading howi wrenches.
18 crescent bolts and pins.
8 blocks metallic-cartridge case.
4 carriage-wrenches.
3 gun-covers.
4 gun-nipples.
3 rammer-covers.
17 spare-article boxes.
330 sabots cartridges.
4 dummy-shot.
2 stands for Gatling gun.
12 friction-primer lanyards.
4 boring-bits.
4 back-ropes.
8 primer-boxes.
36 linchpins.
2 bristle sponge-heads.
1 center-shaft, covered.
3 12-pounder L-iron boat-carriag
9 12-pounder pivot bolts.
100 3-inch breech-loading howitzer-tridges.
2 12-pounder L-iron boat-carria painted.
3 24-pounder muzzle-bags.
5 field-carriages, Gatling gun.
5 transportation-boxes.
4 12-pounder-gun tackles.
8 24-pounder tackles.
2 impression, inspection bore.

SMALL-ARMS, ETC.

6 arm-chests.
12 arm-chest hinges.
6 arm-chest hasps.
11 canvas chest-covers.
95 waist-belts.
18 revolver-frogs.
27 revolver-boxes.
50 cartridge-boxes, rifle.
6 oil-cans.
19 gallons lacquer.
1,753 rifle rear-sight guards.
293 cutlass-scabbards.
1,500 blocks for rifle-cartridge boxes

MAGAZINE-STORES.

21 magazine-hose.
17 magazine-hose spanners.
2 magazine-hose couplings
7 magazine-screens.
8 powder-whips.
2 powder-dishes.
1 powder-funnel.
4 powder-measures.
2 candle-molds.
1,848 32-pounder-cartridge bags.
563 IX-inch-cartridge bags.
100 XV-inch-cartridge bags.
220 24-pounder-cartridge bags.
1,010 12-pounder-cartridge bags.
200 3-pound saluting-charges.
21 magazine-dresses.
16 magazine-shoes.
3 copper-bound cans.
3 copper-bound buckets.
3 portfire-boxes.

Iron work:
11,823 Navy time-fuses.
11,860 Navy time-fuse cases.
4,567 Bormann fuses.
40 percussion-fuses.
120 pounds shell-powder.
5 powder-bearers.
4 powder-buffers.
1 hopper.
1,200 fuse-plugs.
4 cartridge-bag formers.
9,482 cannon-primers.
242 cartridges, 12-ounce, serge bags.
80 cartridges, 12-ounce, metallic case.
5,930 Bormann fuse stocks.
1 feed-table for powder-press.

MISCELLANEOUS ARTICLES.

7 powder-chutes.
1 plan of magazine and shell rooms.
2 IX-inch passing-scuttle funnels.
53 tank-tallies.
8 clevis-bolts.
9 IX-inch passing-scuttles.
14 rammer-brackets.
12 shell-box stands.
18 target-frames.
1 pendulum.
2 target-straps.
2 chain gun-slings.
30 post-sweeps.
4 gallons stain.
1 Parrott die-plate.
3 post-sweep bolts.
2 wrenches.
13 tin cans.
2 passing-boxes.
1 grindstone-frame.
48 tally-boards.
85 packing-boxes.
1 former for XV-inch passing-boxes.
83 sets boarding-pike brackets.
195 fire-bucket hooks.
29 lantern-hooks.
18 rigging-stoppers.
4 target-screens.
176 pair pistol-brackets.
2,652 deck-screws.
1 whip for loading-traveler.
754 whip-circle screws.
6 eccentric-rods and strap-pins.
4 piston-rings and screws.
4 brasses, connects, rods.
2 backing truss-bands.
20 pair hand-spike hooks.
36 dead-eyes.
8 sets deck-circles, sweeps.
233 pairs batten-brackets.
8 bronze castings for launch.
40 rollers for drawings.
2 handles for flood-cocks.
2 grubbing-hoes and picks.
2 grubbing-hoe and pick handles.
1 protractor-ruler.
1 target.
1,530 pounds bloom-iron.
1 canvas ball for life-buoy.
100 handles for powder-tanks.
1 set tallies.
1 bronze table-top.
24 standard starts.
1 range-table.
20 cutlass-beckets.
8 axle-beckets.
8 vent-wire beckets.
2 sets lightning-rods.
90 cutlass-brackets.
77 vent-wire-brackets.
2 railroad-cars for magazines.
1 submarine caisson.
7 cocks, caisson.
2 valves, caisson.
7 cock-wrenches and handles.
2 caisson-pumps.
4 chocks.
40 cleats.
6 ring-bolts.
1 crane, complete.
4 braces for caisson.
1 ring-valve for rubber collar.
1 lever-valve.
1 tank passing-box.
1 submarine caisson, painted.
1 platform for sighting-instrument for guns.
1 pattern for casting sighting-instrument.
14 XI-inch trunnion-caps.
50 leather hose-washers.
13 powder-scuttle frames.
12 powder-scuttle levers.
16 powder-scuttle hooks.
16 powder-scuttle nuts.
60 brass hooks.
1,016 blank-bolts.
3 rollers for steam-derrick.
1 pair sculls for ordnance-dock.
35 scuttle-wrench brackets.

TORPEDOES, ETC.

12 sets complete torpedoes, prepared.
16 bridles, wire.
8 guys, wire.
8 topping-lifts.
8 guys, manila.
1,031 feet ash, Scotchman.
10 torpedo-tackles.
20 torpedo-guys.
3 sets torpedo-gears.
20 25-pound torpedoes.
1 torpedo-boom shackles and attachments.
4 50-pound torpedoes.
36 sheet-copper.
6 torpedo-spar spans and guys.
Repairs to deteriorated stores on hand.
Repairs to tools, &c.
Repairs to buildings, wharves, &c.

No 7.—BUREAU OF MEDICINE AND SURGERY.

NAVY DEPARTMENT,
BUREAU OF MEDICINE AND SURGERY,
November 1, 1876.

SIR: Herewith I have the honor to submit the report of this bureau for the past year, together with estimates for the support of the Medical Department of the Navy for the fiscal year ending June 30, 1878.

ESTIMATES.

The following tabular statement exhibits the several amounts appropriated for the Medical Department of the Navy in the years enumerated and the estimates for 1877–'78:

	Appropriations.					Estimates 1877–'78.
	1872–'73.	1873–'74.	1874–'75.	1875–'76.	1876–'77.	
Surgeons' necessaries and appliances	$40,000	$40,000	$30,000	$30,000	$30,000	$40,000
Repairs and improvements of hospitals	25,000	25,000	5,000	20,000	10,000	40,000
Contingent	25,000	25,000	25,000	25,000	15,000	25,000
Civil establishment	73,372	75,204	39,161	35,000	25,000	45,[illegible]
Total	163,372	165,204	99,161	110,000	80,000	150,[illegible]

On examination, it will be observed that the estimates for the next fiscal year are higher than the sums appropriated for the present year, but in general lower than the average of appropriations for several years previously. The aggregate of the estimates for the coming fiscal year is $12,450 less than the appropriations for the year 1872–'73, and $14,282 less than those of the year 1873–'74.

Compared with the two years just mentioned, the appropriation for the current fiscal year shows a reduction of fully fifty per cent. The branches of the hospital service, which have suffered most from this reduction, are those least able to bear it. They are the "civil establishment" and "repairs and improvements," on the former of which depends the efficiency of the *personnel*, including nurses and other attendants on the sick, and on the latter the ability of the bureau to maintain the hospital buildings and appendages in a suitable condition for the accommodation of the sick. The appropriations for the current year are entirely inadequate to the proper support of the naval medical service, however prudently administered. This being the case, as the official guardian of the sick of the Navy, I feel it incumbent upon me to urge the expediency of larger appropriations than have been granted the last two years, and of a closer approximation to those which my own experience, supplemented by that of my immediate predecessors in office, has found to be indispensable. If a contrary practice has ever prevailed, certainly of late years economy in the administration of the funds intrusted to the Bureau of Medicine and Surgery has been the rule; but during the present year (and to a considerable degree during the previous one also) the economy exercised has almost amounted to parsimony, and in respect to the service at hospitals, it may well be feared, has been attended with a denial to the sick of some of the comforts to which they are entitled.

CIVIL ESTABLISHMENT OF HOSPITALS.

Under this head are embraced all attendants upon the sick, with such other persons, not officers of the Navy, as may be connected with the administration of the hospital service. The employés of the United States Naval Laboratory are also a charge upon it. For the last two fiscal years this appropriation has been so small as to be entirely below the requirements of the service. To eke out deficiencies in the way of nurses and other immediate attendants on the sick, the most undesirable make-shifts have been occasionally resorted to. From the necessity of the case, convalescent patients, or the less infirm, have been compelled to take care of and wait upon their more disabled or helpless comrades. In the seasons of sickness on board ship no persons could sympathize more warmly with, or show greater willingness to assist, an afflicted ship-mate than sea-faring men. There the unavoidable absence of trained help makes friendly attendance on the sick a necessity, which is recognized and yielded to with cheerfulness by all. But at hospitals on shore the sick of all grades and classes feel themelves entitled to receive such offices at the hands of persons paid for the purpose by the Government, and nothing creates greater dissatisfaction among them than to be called on to perform the duties of nurse toward others only perhaps a little more disabled than themselves.

A cursory glance at the appropriations for "civil establishment of hospitals" during the last few years will show how great a reduction in the number and wages of employés has actually taken place. The amounts for the years ending June 30, 1873, 1874, 1875, and 1876 were, respectively, $73,372, $75,204, $39,161, $35,000, and for 1877 only $25,000. The pay-rolls of the five principal naval hospitals for the first-named year, as compared with the current year, give for Chelsea 23 attendants, at $8,824.32, against 13 attendants, at $2,280; New York, 34 attendants, at $11,680.80, against 18 attendants, at $5,400; Philadelphia, 25 attendants, at $7,395.84, against 11 attendants, at $2,799.96; Norfolk, 21 attendants, at $6,856.80, against 13 attendants, at $2,520; and Mare Island, 20 attendants, at $8,823.84, against 9 attendants, at $4,080. In neither of the years 1873 or 1874 was the number of employés or their scale of compensation excessive; on the contrary, they were merely sufficient to enable the bureau to maintain these large establishments on a satisfactory footing. While in no branch of the public service should the slightest approach to extravagance or waste be countenanced, a due regard to the instincts of humanity and the efficiency of the Navy demands that the provision for its sick and disabled, ashore and afloat, should not fall below that standard of liberality which is alone compatible with their comfortable care and earliest possible restoration to health. More than this would partake of the nature of waste; less, would be an act of injustice and wrong to the beneficiaries of the hospital department.

The estimates herewith submitted for the "civil establishment of hospitals" result from a critical revision of the combined recommendations made by the several medical officers in charge, and are believed to be at once sufficient for the purpose and moderate in themselves. As no one can know as well as the naval medical officer what the indispensable wants of the service really are, and the present incumbent of the bureau has uniformly striven to reconcile the just claims of the sick with the observance of a wise economy, the estimates are commended with entire confidence to the consideration and approval of the head of the Department.

REPAIRS AND IMPROVEMENTS OF HOSPITALS.

The expenditure under this head for the last fiscal year amounted to $20,000 against $25,000 in 1873 and 1874, each. In consequence of the small amount thus available, repairs have been limited with strictness to objects of absolute necessity, primarily to those required for the protection of the buildings from the destructive action of the elements. Nothing has been expended for embellishment or mere looks. The appropriation for the current fiscal year is just half the amount appropriated for the year before, and will scarcely suffice to keep the hospitals in tenantable order.

In consequence of the meagerness of the sums at the disposal of the bureau during the last two years, the hospitals, with their heating-apparatus, outbuildings, fences, roadways, wharves, cemeteries, &c., are now in need of extensive reparation, to meet which, as well as provide for ordinary repairs, the amount asked for during the next fiscal year is submitted.

HOSPITAL AT PENSACOLA, FLA.

Since my last annual report, the hospital specially constructed near the navy-yard, Pensacola, for the reception of yellow-fever patients, has been plainly furnished, and is now in readiness for the accommodation of such cases. Owing, fortunately, to an exceptional freedom from the disease on the Gulf coast during the present season, its conveniences and comforts have not been tested, except for the treatment of ordinary maladies. Lengthened immunity from this dreaded visitant cannot be expected, but on its next invasion it will be satisfactory to know that our hospital arrangements are ample for any demands likely to be made upon them.

NAVAL-HOSPITAL FUND.

I desire again to bring the condition of the naval-hospital fund to your notice. The fact stated in my last annual report that it may be considered virtually exhausted still remains. As the support of our various establishments for the care of the sick depends upon this fund, the importance of speedily placing it on a permanent foundation is sufficiently obvious.

The cost of the provisions, medicines, medical stores, fuel, &c., consumed in the naval hospitals and chargeable to this fund, amounts to about $135,000 a year; of which sum $35,000 are realized from "hospital money" and "stopped rations" of the sick, leaving an annual deficiency of $100,000, which must sooner or later be supplied by special legislation. I therefore earnestly request your approval of an appropriation by Congress of the sum named, viz, $100,000, and of a regular annual appropriation of the same amount for the future.

If the replenishing of the naval-hospital fund by specific appropriation be deemed inexpedient, the object may be accomplished in a more indirect, but, in my opinion, equally legal manner, by transferring to it by permanent act a portion of the income of the naval-pension fund. Should this fund, which is now invested in Government bonds bearing only 3 per cent. interest, be re-invested at 6 per cent., its income would not only meet all charges for pension, but leave a balance of several hundred thousand dollars, out of which the sum required might be set aside for the benefit of the congenerous naval-hospital fund. In either case the result to the Treasury of the United States would be the same; but the latter mode, by rendering an annual appropriation unnecessary,

would possess the advantantage of conferring a much-needed stability on the hospital service.

HEALTH OF THE NAVY.

During the past year the health of the Navy has come up to the usual standard. No epidemic or pestilential disease has prevailed on any of the stations, and in the main the experience of the year must be regarded as satisfactory. But good as these results are, better may be expected when a better system of ventilation and a greater degree of dryness shall obtain on board of our cruising-vessels. From the frequent reports made to the bureau by surgeons of the foul state of the bilges of some of our ships, and the almost insuperable difficulty of keeping them in a wholesome condition, I am satisfied much remains to be achieved in naval construction before this evil (which is an undoubted source of disease) shall be remedied. If, with a view to the improvement of the ventilation of holds and berth-decks, a thorough investigation of the whole subject could be made by a joint board of line, construction and medical officers, it can hardly be doubted that the result would be a great advance on the present system of ventilation, which so often proved delusive, and might probably lead to the suggestion of practical means for the more effectual cleansing of bilges than can apparently be done under the existing arrangement. The health of those living in ships depends so closely on the cleanliness of this part of the interior and the rapid elimination by good ventilation of the noxious gases generated there, that the desirableness of an amelioration in these respects must be obvious to all.

Another important factor in maintaining an elevated standard of health among the crews of naval vessels is the dryness of the atmosphere they breathe and of the apartments—notably the berth-deck—where they habitually live. With naval medical men of all nations it has passed into an axiom that a dry ship is a healthy ship. The action of a humid atmosphere, with sudden fluctuations of temperature, especially from a higher to a lower degree, in causing and intensifying many kinds of disease, is almost as well known to the intelligent public as to physicians in extensive practice. At sea these agencies are more actively at work than on land, and for the greater part of his life the sailor is more or less exposed to their influence.

Although it is not pretended that all acute diseases occurring on shipboard originate from dampness, no medical officer is ignorant of the fact that a large proportion of the preventable or avoidable maladies prevailing among sea-faring men are directly traceable to this condition of the decks and atmosphere of ships. The deluging of berth-decks with water for purposes of cleanliness or to produce a neat appearance, once so common in the Navy, and still practiced in some exceptional instances, has long been recognized by medical officers as highly deleterious to the health as well as the comfort of the men living and sleeping on them; and not only by them, but also, in many cases, by judicious commanding officers, who, once convinced of the evils of the practice, have promptly put a stop to it.

How abnormally damp the interior of a man-of-war may become is shown by recent hygrometric observations on board one of our larger ships cruising in a warm climate, where the medical officer, a man of scientific attainments and large naval experience, ascertained that the air of the berth-deck for a lengthened period was constantly on the verge of saturation, *i. e.*, on the point of depositing its moisture, or, in other

words, raining; and this notwithstanding steam was used for its drying properties on, as well as below, the berth-deck some 203 out of 311 days. The assumed necessity for resorting to this use of artificial heat (a portion of the time in an almost tropical region) demonstrates the presence of an extraordinary amount of humidity. How much of this was owing to natural and how much to avoidable causes is a problem not easy of solution, but the fact that the berth-deck in question during the term of these observations had been wet once in about every thirty hours, raises a reasonable suspicion that it was not altogether the result of natural agencies.

The order of the Department issued early in the present year revoking a former order, which forbade the covering of berth-decks with shellac, will remove a portion of this source of disease in cases where the inordinate use of water may still prevail, and by securing dryness in the quarters occupied by the men, cannot fail to prove to them a boon of no inconsiderable value.

SURGEON'S QUARTERS AT MARE ISLAND HOSPITAL.

Among the estimates herewith submitted is one for the erection of a house for the medical officer in charge of the naval hospital at Mare Island, Cal. At present this officer has to seek quarters for himself and family in the hospital. With the increasing demand for space to accommodate patients, this arrangement is beginning to occasion great inconvenience.

The want of a house has been felt for a number of years, and estimates have heretofore been submitted, but without result. It is believed the period has at length arrived when the work can no longer be delayed. Separate quarters for the senior surgeon exist at all the other principal hospitals, and the necessity for their erection at this establishment is the greater because there are no private houses near it which the surgeon could hire.

LIBRARIES AT NAVAL HOSPITALS.

I beg leave to renew a former recommendation, that a small appropriation be granted for the purchase of books for use at the principal naval hospitals, which, at present, are quite destitute of these invaluable aids in the care of the sick.

This want, it is assumed, needs but to be mentioned to commend itself to the favorable consideration of the law-making power.

BUREAU PUBLICATIONS.

The Surgical History of the Navy, spoken of in my report of 1874 as then rapidly approaching completion, was in such a state of forwardness at the last session of Congress as to justify the hope that authority would be given for the publication, at least, of the first volume. Disappointed in that expectation, the bureau now earnestly renews its recommendation that this valuable collection of facts, embracing, in addition to other years, the entire period of the civil war, shall no longer be withheld from the medical profession. It is a modest effort to do for the Navy what the Surgical History of the Rebellion, published under the auspices of the War Department, has done for the Army, and, though not intended to vie with that unrivaled publication, will be a work of the like scope and comprehensiveness.

The only publication by the bureau since the issue of its last annual report was a volume of "Sanitary and Medical Reports for 1873–'74." This work has been received with gratifying favor by the public, both professional and otherwise, and contains so much useful information that it is hoped a similar volume may be issued every year.

NAVAL MEDICAL SCHOOL.

The project of establishing, on a very moderate scale, a school for the instruction of assistant surgeons in certain practical branches of their profession, was presented in my annual reports of 1873 and 1874. The views then expressed of the benefits it would confer on the younger members of the corps, having been strengthened by further reflection, the subject is again commended to your favorable consideration.

Very respectfully, your obedient servant,

J. BEALE,
Surgeon-General United States Navy.

Hon. GEO. M. ROBESON,
Secretary of the Navy.

A.—*Annual statement compiled from sick-reports from naval stations and vessels in commission on home and foreign service for the year ending December* 31, 1875.

Hospitals.	Remaining sick December 31, 1874.	Admitted in 1875.	Discharged in 1875.	Died in 1875.	Total treated in 1875.	Remaining sick December 31, 1875.	Percentage of deaths to whole number treated.
Chelsea, Mass	18	38	46	4	56	6	.....
Brooklyn, N. Y	39	299	282	13	338	43	.....
Philadelphia, Pa	19	179	144	19	198	35	.....
Annapolis, Md	5	30	31	.....	35	4	.....
Washington, D. C	21	63	61	4	84	19	.....
Norfolk, Va	19	169	156	5	188	27	.....
Pensacola, Fla	5	37	34	6	42	2	.....
Mare Island, Cal	61	101	114	5	162	43	.....
Yokohama, Japan	13	63	56	5	76	15	.....
Total	200	979	924	61	1,179	194	.05

Yards and stations.	Remaining December 31, 1874.	Admitted in 1875.	Discharged in 1875.	Died in 1875.	Total treated in 1875.	Remaining December 31, 1875.	Percentage of deaths to whole number treated.
Portsmouth, N. H	9	102	102	3	111	6	.....
Boston, Mass	3	92	94	1	95	.....	.....
Brooklyn, N. Y	7	233	232	1	240	7	.....
Philadelphia, Pa	1	249	248	.....	250	2	.....
League Island, Pa	1	20	19	.....	21	2	.....
Washington, D. C	6	193	198	.....	199	1	.....
Norfolk, Va	1	94	93	1	95	1	.....
Pensacola, Fla	.....	59	57	1	59	1	.....
Mare Island, Cal	2	76	75	.....	78	3	.....
Torpedo-station	1	51	50	1	52	1	.....
Naval Academy	7	974	955	3	981	23	.....
Total	38	2,143	2,123	11	2,181	47	0.005

A.—*Annual statement compiled from sick-reports, &c.*—Continued.

Receiving-ships.	Average number on board in 1875.	Remaining December 31, 1874.	Admitted in 1875.	Discharged in 1875.	Died in 1875.	Total treated in 1875.	Remaining December 31, 1875.	Percentage of deaths to whole number treated.
Portsmouth, N. H	206	.....	78	74	2	78	2	.....
Boston, Mass	252	.....	108	100	1	108	7	.....
Brooklyn, N. Y	569	3	144	143	1	147	3	.....
Philadelphia, Pa	120	3	69	69	.....	72	3	.....
Norfolk, Va	273	5	30	32	.....	35	3	.....
Mare Island, Cal	114	25	60	81	.....	85	4	.....
Total	1,534	36	489	499	4	525	22	0.007

Summary of vessels in commission.

Average number of persons on board during year 1875	10,141
Remaining sick December 31, 1874	238
Admitted in 1875	7,594
Discharged in 1875	7,561
Died in 1875	49
Total treated in 1875	7,832
Remaining sick December 31, 1875	222
Percentage of cases to whole number on board	0.70
Percentage of deaths to whole number on board	0.004
Percentage of deaths to whole number of cases treated	0.006

RECAPITULATION.

	Aggregate number of officers and men on board of vessels in 1875.	Remaining sick December 31, 1874.	Admitted in 1875.	Discharged in 1875.	Died in 1875.	Total treated in 1875.	Remaining sick December 31, 1875.	Percentage of cases to number of persons on board.	Percentage of deaths to number of persons on board.	Percentage of deaths to number of persons treated.
Hospitals	.....	200	979	994	61	1,179	194	.....	.....	0.05
Yards and stations	.....	38	2,143	2,123	11	2,181	47	.....	.....	0.005
Receiving-ships	1,534	36	489	499	4	525	22	0.30	0.004	0.007
Vessels in commission at sea	10,141	238	7,594	7,561	49	7,832	222	0.70	0.004	0.006
Total	11,675	512	11,205	11,107	125	11,717	485	1.01	0.01	0.01

At the close of the year 1874 there remained under treatment 512 cases; during the year 1875 there occurred 11,205 cases of disease, injury, &c., making a total of 11,717 cases treated during the year; of which number 125 died, 11,107 were returned to duty or discharged the service, leaving 485 cases under treatment at the close of the year 1875.

The average strength of the Navy (officers, seamen, marines, engineer-service, and Coast Survey included) for the year 1875, as near as can be ascertained, was about 11,675.

The percentage of cases admitted to the whole number of persons in the service was about 1.01, or each person was on the sick-list $1\frac{1}{100}$ times during the year. The percentage of deaths to the whole number of persons in the service was 0.01, and the percentage of deaths to the whole number of cases treated was 0.01.

The total number of deaths from all causes, reported at the Navy Department from October 1, 1875, to September 30, 1876, was 118.

	North Atlantic.		South Atlantic.		European.		Pacific.		Asiatic.		Special service.		School and practice.		Coast survey.		Total.	
Aggregate number of men	3,489.		1,124.		1,182.		1,782.		1,489.		560.		400.		115.		10,141.	
	Cases treated.	Deaths.	Cases treated.	Deaths.	Cases treated.	Deaths.	Cases treated.	Deaths.	Cases treated.	Deaths.	Cases treated.	Deaths.	Cases treated.	Deaths.	Cases treated.	Deaths.	Cases treated.	Deaths.
Class I.—Zymotic diseases:																		
Order I.—Miasmatic diseases:																		
Catarrhus epidemicus			6				3		6				15				30	
Cholera epidemica									4	3							4	3
Cynanche parotidea			5				1		2		1						9	
Dengnis																		
Diphtheria	1																1	
Erysipelas	3				6		4	1	4								17	1
Febris cerebro-spinalis																		
Febris continua simplex	34		8		33		19		1		3						98	
Febris enterica	9		2		4	1	2		3								20	1
Febris flava	2		24	6													26	6
Febris intermittens	215		21		42		153		106		36		11		6		590	
Febris recidiva																		
Febris remittens	58		2	1	4		4		34		2				1		105	1
Febris typhus																		
Morbilli									1								1	
Pertussis																		
Pestis																		
Phagedæna putris																		
Pyæmia																		
Scarlatina																		
Varicella					2												2	
Variola			1	1					11	1							12	2
Varioloides	1								2								3	
Vaccinia	4								13								17	
Order II.—Enthetic diseases:																		
Syphilis primitiva	108		44	1	58		57		70		5		2		6		350	1
Syphilis consecutiva	23		15		14		27		58		3		1		9		150	
Gonorrhœa	53		24		37		74		32		3		3		10		236	
Ophthalmia gonorrhöica									1								1	

B.—*Summary of prevalent forms of disease on home and foreign service for the year ending December* 31, 1875—Continued.

	North Atlantic.		South Atlantic.		European.		Pacific.		Asiatic.		Special service.		School and practice.		Coast survey.		Total.	
	Cases treated.	Deaths.	Cases treated.	Deaths.	Cases treated.	Deaths.	Cases treated.	Deaths.	Cases treated.	Deaths.	Cases treated.	Deaths.	Cases treated.	Deaths.	Cases treated.	Deaths.	Cases treated.	Deaths.
Class I.—Zymotic diseases—Continued.																		
Order III.—Di-tic diseases:																		
Alcoholismus	17		9		8		23		9		11		4				81	
Delirium tremens	4						1		2				1				8	
Ebriositas	3						1		1		2						7	
Fames																		
Scorbutus											1						1	
Class II.—Constitutional diseases:																		
Order I.—Diathetic diseases:																		
Adynamia	54		15				10		22		2						103	
Anæmia	4		2				1		1								8	
Carcinoma	1																1	
Gangræna senilis																		
Hydrops	1						2				1	1					4	1
Podagra	1		1		1		1		1		1						6	
Rheumatismus acutus	67		20		13		56		21		14				1		192	
Rheumatismus chronicus	95		51		49		55		64		14		3		2		333	
Rheumatic gout	1																1	
Rheumatismus gonorrheal	1																1	
Order II.—Developmental diseases:																		
Atrophia																		
Degeneratio																		
Hypertrophia	1																1	
Senectus	2																2	
Arthema	2																2	
Anasarca	1																1	
Order III.—Tubercular diseases:																		
Scrofula	4				2				1								7	
Tuberculosis	4				3	1									1		8	1
Class III.—Parasitic diseases:																		
Scabies																		
Vermes	3		1				1		1		1				2		9	
Dracunculus	2						2										4	
Class IV.—Local diseases:																		
Order I.—Diseases of the nervous system:																		
Amaurosis	2	2					1		1	1							4	3

Cephalalgia	24		11		3		13		22		2		9		3		87	
Cerebritis																		
Chorea	1		1		1												3	
Dementia	3		3		7		3		3				2				21	
Epilepsia	14		5		15		12		2		4				1		53	
Insolatio	4								1	1							5	1
Irritatio spinalis	1		1				2				3						8	
Mania	6		1				2										9	
Melancholia	2						2										4	
Meningitis	1								1								2	
Myelitis																		
Neuralgia	42		16		7		30		16		3		4		2		120	
Nostalgia	7								1								8	
Paralysis	6		1		1				4								12	
Plemodynia	2								1		1						4	
Lumbago	1																1	
Vertigo	2																2	
Imbecilitas mentis	1																1	
Order II.—Diseases of the eye:																		
Amaurosis	1		1				1		1								4	
Cataracta	1		1				1										3	
Conjunctivitis	26		7		5		18		13		3		2		1		75	
Fistula lachrymalis																		
Hemeralopia																		
Iritis	1				2		2		4						1		10	
Nyctalopia																		
Ophthalmia	4				2		5		5				3				19	
Pterygium	1				1												2	
Opacity of cornea	1																1	
Myopia	1				2												3	
Ulcus corina	1																1	
Mydriasis	1																1	
Order III.—Diseases of the ear:																		
Otalgia	4																4	
Otitis	4		2		1		3		9								19	
Otorrhœa	2						1								1		4	
Surditas							1		2								3	
Order IV.—Diseases of the teeth:																		
Odontalgia	2														4		6	
Order V.—Diseases of the circulatory system:																		
Aneurysma					2	1	2						1				5	1
Angina pectoris	7							1	2								10	
Endocarditis	1																1	
Hydrops pericardii																		
Hypertrophia cordis									1								1	
Morbi valvularum cordis	1		7		3						1	1					12	1
Palpitatio	43		1		2		1		3		2				1		53	
Pericarditis			1		1		3	1									5	1
Phlebitis	1		1				1				1						4	
Varix	3		1		2		1										7	
Angnolincitis	1		1														2	

B.—*Summary of prevalent forms of disease on home and foreign service for the year ending December* 31, 1875—Continued.

	North Atlantic		South Atlantic.		European.		Pacific.		Asiatic.		Special service.		School and practice.		Coast survey.		Total.	
	Cases treated.	Deaths.	Cases treated.	Deaths.	Cases treated.	Deaths.	Cases treated.	Deaths.	Cases treated.	Deaths.	Cases treated.	Deaths.	Cases treated.	Deaths.	Cases treated.	Deaths.	Cases treated.	Deaths
Class IV.—Local diseases—Continued.																		
Order VI.—Diseases of the respiratory system:																		
Apnœa													1				1	
Asthma	8				2		2				1						13	
Bronchitis acuta	65		29		11		24		52		26		4		8		219	
Bronchitis chronica	23		9		2		19		3		1		2				59	
Catarrhus	67		11		47		45		53		8		9		5		245	
Epistaxis	1						1										2	
Hydrothorax																		
Laryngitis	2		4		1		1		2								10	
Phthisis pneumonica acuta	10		2		4		2		2	1							20	1
Phthisis pneumonica chronica	15	3	9	1	9	1	7		12		4						56	5
Pleuritis	12		7	2	7		9		9		7						51	2
Pneumonia	13	1	3	1	2		6	1	5						1		30	3
Hæmoptysis	2						3		1		1						7	
Pertussis	1																1	
Pleuro-pneumonia	1																1	
Pleurodynia							2		1								3	
Order VII.—Diseases of the digestive system:																		
Ascites					2												2	
Cholera morbus	26		5		13		64	1	5		3		10		5		131	1
Cirrhosis hepatis									1								1	
Colica	32		20		5		14		26		4		8				109	
Constipatio	14		10		3		6		4		6		15		9		67	
Diarrhœa acuta	106		22		37		86		217		40		24		10		542	
Diarrhœa chronica	14		3		1		5		15		1		3		1		43	
Dysenteria acuta	30		11		6		27		43	1	7		8		21		153	1
Dysenteria chronica	5				1		10	1	4								20	1
Dyspepsia	28		10		2		11		9		3		18				81	
Enteritis																		
Fistula in ano	4		1		1		4		2								12	
Gastritis	7		2				6				3						18	
Haematemesis					1		1		1								3	
Hæmorrhoids			[illegible]		[illegible]		[illegible]		[illegible]		[illegible]				1		69	

Icterus	6		4		4		4		6								24	
Peritonitis	1				2												3	
Pharyngitis	7		2		2		7		1		3						22	
Prolapsus ani	2						1										3	
Splenitis	1								1								2	
Stomatitis	2				10		3										15	
Tonsillitis	41		22		15		15		7		11		4		1		116	
Fissura in ano			1														1	
Nausea			1														1	
Oesophagi strictura			1														1	
Order VIII.—Diseases of the urinary and genital system:																		
Albuminuria	2										1						3	
Calculus									4								4	
Cystitis	7				1		2		2		1		1				14	
Diabetes							1	1									1	1
Dysuria	1				1		2						1				5	
Ischuria					2												2	
Nephritis	1		2		1		1		2		1						8	
Orchitis	27		11		22		22		61		2		2				147	
Paraphymosis	1																1	
Phymosis	2				5		2		2		1						12	
Enuresis			1		4		3		1								9	
Fistula vesicæ	1				2												3	
Hæmaturia	1										2						3	
Hydrocele					1		1		4								6	
Spermatorrhœa																		
Urethræ stricutura	5		7		6		4		6		2		2				32	
Varicocele	2		1				1		3				1				8	
Order IX.—Diseases of the locomotive system:																		
Arthritis	2				1		1										4	
Anchylosis									3								3	
Caries	1										1						2	
Coxalgia	1																1	
Hydrops articulorum	1																1	
Necrosis							1										1	
Ostitis																		
Periostitis	3				1		2		4		3				1		14	
Synovitis	6				2		2		4								14	
Myalgia	2																2	
Phegmon									1								1	
Anasarca									1								1	
Order X.—Diseases of the integumentary system:																		
Abscessus	64		23		18		47		39		3		7		1		202	
Acne	2														1		3	
Adenitis	33		15		18		28		30		5		1				130	
Anthrax	6		1				3		5				2		1		18	
Ecthyma	2				1		2										5	
Eczema	10						4		1				1				16	
Erythema			1				2										3	
Furunculus	82		27		36		69		67		3		2		7		293	
Herpes	4				1		3		1								9	
Impetigo	1								5								6	

B.—*Summary of prevalent forms of disease on home and foreign service for the year ending December* 31, 1875—Continued.

	North Atlantic.		South Atlantic.		European.		Pacific.		Asiatic.		Special service.		School and practice.		Coast survey.		Total.	
	Cases treated.	Deaths.	Cases treated.	Deaths.	Cases treated.	Deaths.	Cases treated.	Deaths.	Cases treated.	Deaths.	Cases treated.	Deaths.	Cases treated.	Deaths.	Cases treated.	Deaths.	Cases treated.	Deaths.
Class IV.—Local diseases—Continued.																		
Order X.—Diseases of the integumentary system—Cont'd.																		
Lepra							1										1	
Lichen	1						3										4	
Paronychia	32		10		6		29		10								87	
Pemphigus									3								3	
Pernio	9								2								11	
Porrigo	1																1	
Prurigo																		
Psoriasis					1		1										2	
Rupia	1						2										3	
Unguis involutis	2				1												3	
Ulcus	9		6				1		4		1		1				22	
Unguis avulsio	1																1	
Urticaria	2								2								4	
Ptyriasis rubia					1												1	
Class V.—Non-malignant tumors and cysts:																		
Adenoma							4		1								5	
Angeloma																		
Cystis sebacea			1		2								2				5	
Enchondroma							1										1	
Fibroma																		
Lipoma					1												1	
Neuroma																		
Osteoma							1										1	
Polypus	1																1	
Sarcoma																		
Coudeloma							1										1	
Class VI.—Violent diseases and deaths:																		
Order I.—Wounds, injuries, and accidents:																		
Abrasio	22		8		14		14		11		2		7				78	
Ambustio	19		7		9		12		5		4		4	1			60	1
Concussio cerebri	2	1			3		30	1	4								39	2
Contusio	104		39		61		76		58		25		30		4		397	
Diaphysis																	1	

Hernia	13		7		7		7		2		2		2		2		42	
Luxatio	12				3		10		2		2				1		30	
Concussio spinalis							1										1	
Stremma	70		14		47		51		33		2						217	
Submersio	2	2	1	1	1	1	1	1	1								6	5
Venenatio																		
Vulnus contusum	121		14		58		49		35		4		8		3		292	
Vulnus incisum	52		14	1	18		25		10		4		7		2		132	1
Vulnus laceratum	31		1		4		17		6		2						61	
Vulnus punctum	8		4		14		6	1	8		1		2				43	1
Vulnus sclopetarium	2		2						1								5	
Vulnus venenatum	2						4				1						7	
Malingering	1																1	
Total	2,400	9	733	15	905	5	1,570	9	1,507	8	329	2	251	1	137		7,832	49

C.

Naval-hospital fund.

The condition of this fund is represented as follows:

Balance on hand October 1, 1875	$2,134 65
Transferred to the credit of the fund, in settlement of accounts, by the Fourth Auditor, from October 1, 1875, to October 1, 1876	31,646 92
Total	33,781 57
Deduct amounts expended from October 1, 1875, to October 1, 1876	32,946 65
Balance on hand October 1, 1876	834 92

D.

Insane of the Navy.

On the 30th September, 1875, there remained under treatment in the Government Hospital for the Insane, near this city: 4 officers; 1 late ensign; 10 seamen; 3 ordinary seamen; 1 seaman, (engineer force;) 3 ordinary seamen, extra; 1 late seaman; 11 landsmen; 1 late landsman; 1 coal-heaver; 9 marines; and 3 beneficiaries—total		48
Admitted during the year ending September 30, 1876: 2 officers; 2 seamen; 1 seaman, extra; 2 landsmen; 2 beneficiaries—total		9
Total number under treatment during the year		57
The discharges in the course of the year were—		
By recovery or improvement:		
1 seaman, (engineer force;) 2 ordinary seamen; 1 landsman—total	4	
By death:		
1 seaman; 1 landsman; 1 marine; 2 beneficiaries	5	
		9
Leaving in the institution on the 30th September, 1876: 6 officers; 1 late ensign; 11 seamen; 1 ordinary seaman; 3 ordinary seamen, extra; 1 seaman, extra; 1 late seaman; 11 landsmen; 1 late landsman; 1 coal-heaver; 8 marines; and 3 beneficiaries—total		48

No. 8.—BUREAU OF PROVISIONS AND CLOTHING.

NAVY DEPARTMENT,
BUREAU OF PROVISIONS AND CLOTHING,
November 8, 1876.

SIR: I have the honor to submit herewith estimates, marked A, B, C, D, and E, for the fiscal year ending June 30, 1878.

The bureau takes this opportunity to renew its recommendation of last year, that appointments to the Paymasters' Corps of the Navy be made from graduates of the Naval Academy at Annapolis, as it is the opinion of the bureau, strengthened by the favorable results produced by the appointments to the Engineer Corps of the Navy under the new system, that the proposed change would tend to promote unity of feeling between line and staff officers and add materially to the efficiency of the naval service.

I have the honor to be, very respectfully, &c.,

JAS. H. WATMOUGH,
Acting Paymaster-General, United States Navy.

Hon. GEO. M. ROBESON,
Secretary of the Navy.

Estimates of appropriations for the service of the fiscal year ending June 30, 1878, *by the Bureau of Provisions and Clothing.*

Detailed objects of expenditure, and explanations.	Estimated amount which will be required for each detailed object of expenditure.	Amount appropriated for the current fiscal year ending June 30, 1877.
A.—Expenses of the Bureau of Provisions and Clothing.		
For salary of chief clerk, per act of July 5, 1862, (12 Stat. at L., p. 511, sec. 3)	$1,800 00	
For salary of one clerk of class four, per act of July 23, 1866, (14 Stat. at L., p. 208, sec. 8)	1,800 00	
For salary of three clerks of class three, per act of July 23, 1866, (14 Stat. at L., p. 208, sec. 8)*	4,800 00	
For salary of two clerks of class two, per act of July 23, 1866, (14 Stat. at L., p. 208, sec. 8)	2,800 00	
For salary of three clerks of class one, per act of July 23, 1866, (14 Stat. at L., p. 208, sec. 8)	3,600 00	
For salary of messenger, per act of July 5, 1862, (12 Stat. at L., p. 511, sec. 3)	840 00	
For salary of one laborer, per act of July 12, 1870, (16 Stat. at L., p. 250, sec. 3)	720 00	
	16,360 00	$14,760 00
B.—Contingent expenses of the Bureau.		
For blank-books, stationery, and miscellaneous items, (appropriated,) (18 Stat. at L., p. 363)	800 00	400 00
C.—Provisions for the Navy.		
To pay 1,065 officers for commuted rations; being on duty and entitled to the same, at 30 cents per day	116,617 50	
To pay 1,500 men for commuted rations; being one-fifth of the number of men allowed, at 30 cents per day	164,250 00	
For the purchase of rations for 6,000 men; being four-fifths of the number of men allowed, at 30 cents per day	657,000 00	
For 10 per cent. on above amount for waste in handling and issuing provisions, and loss from condemnation	65,700 00	
To pay 203 marines for commuted rations; being one-fifth of the number on duty entitling them to a ration, at 30 cents per day	22,228 50	
For the purchase of rations for 813 marines; being four-fifths of the number on duty entitling them to a ration, at 30 cents per day	89,023 50	

* The estimate for an additional clerk of class three (allowed by act of July 23, 1866) is submitted on account of the Department's order of July 21, 1873, requiring the accounts of all pay-officers to be settled quarterly instead of at the end of a cruise.

Estimates of appropriations for the service, &c.—Continued.

Detailed objects of expenditures, and explanations.	Estimated amount which will be required for each detailed object of expenditure.	Amount appropriated for the current fiscal year ending June 30, 1877.
C.—*Provisions for the Navy*—Continued.		
For 10 per cent. on above amount for waste in handling and issuing provisions, and loss from condemnation	$8,902 35	
To pay expenses of nine inspections in the United States, including labor, and three store-houses abroad, including labor and rent	100,000 00	
For the purchase of water for ships, (appropriated,) (18 Stat. at L., p. 300)	30,000 00	
	1,253,721 85	$955,000 00
D.—*Contingent expenses of the Navy under Bureau of Provisions and Clothing.*		
For freight-charges on shipment	35,000 00	
For candles	25,000 00	
For fuel	1,000 00	
For books and blanks	1,000 00	
For stationery	9,000 00	
For advertising and commissions on sales	1,500 00	
For postage, telegrams, and express-charges	500 00	
For yeoman's stores	2,000 00	
	75,000 00	35,000 00
NOTE.—Prior to the fiscal year 1874–'75 the annual appropriation under contingent, Bureau of Provisions and Clothing, was $75,000, and it is found by experience that a smaller sum than the above estimate is inadequate to the wants of the service. The above estimates are based upon the actual expenditures for the last fiscal year.		
E.—*Clothing and clothing materials for the Navy.*		
For the purchase of clothing and clothing materials, (submitted)	150,000 00	150,000 00
NOTE.—The appropriation "Pay of the Navy" having been for the last two years insufficient to admit of the necessary quarterly transfers to the "clothing fund," and the said fund being nearly exhausted, the appropriation of $150,000 becomes necessary for the requirements of the service for the next fiscal year.		

No. 9.—BUREAU OF STEAM-ENGINEERING.

NAVY DEPARTMENT,
BUREAU OF STEAM-ENGINEERING,
Washington, October 30, 1876.

SIR: I have the honor respectfully to submit the annual report of this bureau, with estimates for the preservation, construction, and repairs of the machinery of naval steamers at the several yards and stations; for the necessary stores, labor, materials, &c., required in fitting out and maintaining in efficient condition the machinery of steamers cruising on foreign stations, heating and ventilating apparatus, &c., and for incidental purposes under the cognizance of this bureau.

The following lists specify character and extent of work done by this bureau in refitting the machinery of naval steamers during the past year for active service. They show also their present condition, and the work necessary to further repair and refit such as are required for service at sea, &c.

Colorado, (first rate.) New boilers are being constructed at the Delamater Iron-Works, New York, and are nearly completed; there remains to be done, to place the machinery of the Colorado in an efficient condition for service, the erection of the new boilers on board, with all necessary connections and a general overhauling of the engines and their dependencies.

Franklin, (first rate.) Some repairs to the machinery of the Franklin were made at the government dock-yard at Spezia, Italy, during her present cruise, now about its termination. The boilers are reported unreliable, and should be replaced by new ones. The machinery requires the usual overhauling and repairs incidental to that of all vessels at the expiration of their cruises.

Wabash, (first rate.) This vessel requires new boilers and machinery.

The machinery of the following vessels requires overhauling and repairs to place it in proper condition for continued active cruising: Brooklyn, (second rate,) Richmond, (second rate,) and Omaha, (secondrate.)

New boilers have been completed for the Juniata, (third rate,) and are ready for erection and connection with the machinery on board, which requires very extensive repairs.

Boilers, partially completed, are being constructed for the following-named vessels: Wachusett, (third rate,) Alaska, (second rate,) Benicia, (second rate,) Shenandoah, (second rate,) Puritan, (second rate, iron-clad,) Amphitrite, (third rate, iron-clad,) Monadnock, (third rate, iron-clad,) Terror, (third rate, iron-clad.)

New machinery and boilers for the Miantonomoh (third rate, double-turreted twin-screw iron-clad) are well advanced toward completion.

The machinery of the following vessels is undergoing repairs of greater or less extent at the stations named, (those marked * have new boilers:) Swatara, (third rate,) navy-yard, New York; Iroquois,* (third rate,) Mare Island, Cal.; Tuscarora, (third rate,) Mare Island, Cal.; Wyoming,* (third rate,) navy-yard, Washington, D. C.; Canandaigua, (second rate,) navy-yard, Norfolk, Va.; and Comanche, (fourth rate, iron-clad.)

The machinery of the steamer Gettysburg has been recently repaired at the navy-yard, Washington, and the vessel is now in active service at sea.

On the Asiatic station, new boilers have been erected on board the Ashuelot, (third rate,) Monocacy, (third rate,) and Palos, (fourth rate,) and the machinery of these vessels placed in thorough and efficient re-

pair for continued active cruising. The usual repairs required by the vessels of the smaller class—tugs, steam-launches, &c.—have been made, (and in some cases requiring new boilers and machinery,) so far as the means at the disposition of this bureau permitted.

New boilers should be constructed for the Omaha, (second rate,) Hartford, (second rate,) Narragansett, (third rate,) Yantic, (third rate,) and Saco, (third rate.) New machinery is being constructed at the navy-yards, at Norfolk, Va., and Mare Island, Cal., for the Mohican and Galena. But little progress has been made during the present fiscal year toward its completion. New machinery for the Trenton, (second rate,) constructed by John Roach & Son, Morgan Iron-Works, New York, has been erected on board that vessel, and a very satisfactory preliminary trial at the dock has been had. The vessel is now being fitted out for sea-service at the navy-yard, New York, and a thorough trial of the machinery (which is of the compound type) will be made prior to her departure from the United States. Quinnebaug, (third rate.) The new compound machiney for this vessel (converted from simple to compound at the navy-yard, New York, and erected under contract with Messrs. Neafie & Levy, of Philadelphia, Pa.), is about ready for a steam-trial and fitting out for sea-service. Vandalia, (third rate.) The machinery converted from the simple to the compound type at the navy-yard, Boston, Mass., has been erected on board the vessel, and a satisfactory trial of it has been had; she is now performing efficient service at sea. Marion, (third rate.) The machinery, also converted into the compound from the simple type, is completed on board the vessel, has been thoroughly tested, and is now performing satisfactory service at sea. Enterprise, (third rate.) The new compound engines constructed by the Woodruff Iron-Works, at Hartford, Conn., are completed and erected on board the vessel. A satisfactory contract-trial has been had, and the machinery is reported ready for service. In my last report I had the honor to call your attention to the necessity of erecting engines on board the twin-screw double-turreted monitors, Amphitrite, Terror, and Monadnock. In this respect nothing has been done except to place under contract the boilers for these vessels, as previously reported, that they might be placed in the holds of the vessels prior to putting on the iron decks, beams, and plates, a necessity arising from there being no permanent openings in the decks large enough to admit them into the holds of the vessels after the completion of the latter, then under contract by the Bureau of Construction. Drawings and specifications of the engines have been prepared, but no contracts made for the machinery, which should be placed under contract without further delay, that the services of these monitors may be available on the completion of the hulls, which are well advanced.

SCREW-SLOOP LANCASTER.

New boilers have been completed for this vessel by the Providence Steam-Engine Company. As our vessels, when cruising abroad, burn more bituminous coal than anthracite the boilers have been designed with that view. I believe they will burn bituminous coal better than any we have at present, and will burn anthracite equally well. They will permit a high rate of combustion, and will develop greater power in proportion to the space occupied than the boilers they will replace. The engines, built in 1859, and in almost constant use ever since, are now about worn out, and not worth repairs. They should be removed and replaced by others; and I would suggest for this purpose the engines of

the Worcester, which are in good condition. Though not of the most improved type, these engines are of a later and better design than the present machinery of the Lancaster, and, with the new boilers, and a new screw-propeller of greater diameter and area of propelling surface, already designed, will nearly double the engine-power of the vessel, and her speed against a head wind and sea will be greatly increased. The boilers are designed to carry forty (40) pounds pressure above the atmosphere, and it is calculated that 1,600 indicated horses-power will be developed when the steam is cut off at one-fourth of the stroke of the piston. The range of expansion will be from one-fourth to six-tenths, and with the link in full gear, nearly the full power may be developed with a boiler-pressure of seventeen pounds above the atmosphere. This will give the vessel a good speed during the whole life-time of the boilers.

Dimensions of the machinery.

	Original machinery.	New machinery.
ENGINES.		
Number of cylinders	2	2
Diameter of cylinders, in inches	61	60
Stroke of pistons, in feet and inches	2′ 9″	3′
Kind of condensers	Jet	Surface.
Revolutions per minute	44	60*
Indicated horses-power developed by engines	810	1,600*
Speed, in nautical miles, per hour	9.5	11*
Length of engines, fore and aft, in feet and inches	19′ 1″	21′ 3″
Width of engines, athwartship, in feet and inches	24′ 1″	19′ 3″
SCREWS.		
Diameter, in feet and inches	15′ 6″	17′
Pitch, in feet and inches	24′ 9″	21′ 3″
Length, on line of keel, in inches	36″	31 7-8″
Helicoidal area, in square feet	58.28	132

	KIND OF BOILER.		
	Original.	Present.	New.
	Martin's vertical tubular.	Martin's vertical tubular.	Horizontal tubular.
Total area of grate surface, in square feet	294	351	336
Total area of heating-surface, in square feet	9,040	9,606	9,397
Ratio of grate to heating surface	30.7	27	28
Calorimeter	1-7	1-7	1-6
Number of boilers	4	4	4
Length over the boilers, fore and aft, in feet and inches	20′ 6″	33′	29′ 6″

	Original arrangement.	Present arrangement.	New arrangement.
Length occupied in the vessel, by all machinery, in feet and inches	56′ 6″	59′ 9″	59′ 6″

* Calculated.

CHANGE OF SCREWS.

Since the date of my last report no further opportunity has been had of replacing the original screws of four blades and removing the inefficient two-bladed screws with which a very large number of our naval steamers were fitted in the year 1869, to which change their loss of

speed when steaming was more attributable than perhaps to any other cause. To show the great superiority in efficiency and economy of the original over the substituted screws, I submit the following tables. They contain all the necessary data connected with the change of screws as recorded in the steam-logs of the vessels, including the cost of making and fitting the new screws, as far as could be ascertained, the loss in speed and waste of coal consequent to the increased percentage of slip incident to the use of the two-bladed screws of insufficient area, as previously reported. The total number of pounds of coal that would have been burned had the original screws not been removed, is calculated on the assumption that the vessels would have been run the same distances, at the same speeds, as they actually were run with the substituted screws, and the computation determines the coal wasted at those speeds and distances.

Name of vessel.	Name of the patentee.	Number of blades.	Diameter in ft. and in.	Mean pitch in ft. and in.	Length in inches.	Where made.	Where fitted.	Of what material.	Finished, weight in pounds.	Cost of making.	Cost of fitting.	Final disposition of the two-bladed screws.
Severn	Mangin	4	17	32	42	Washington	New York	Composition	12,030	$4,240 25	$359 00	Melted for other purposes.
Do		2	17	34	42	do	do	do	14,150	2,675 99		Still on the vessel.
California		2	17	28	42	do	Boston	do	14,900	1,974 51	192 62	Sold with the vessel.
Albany		2	17	32	42	do	New York	do	14,150	3,661 50		Do.
Congress		2	17	32	42	do	Philadelphia	do	14,600	3,905 43		Still on the vessel.
Worcester	Griffiths	2	16.7½	28		do	Not used	do	22,000	2,782 39		In store at Norfolk.
Do	Hirsch	2	17	29		Boston	Boston	do	12,190	3,156 68	256 20	
Do		2	17	28	42	Washington	New York	do	14,400	4,116 28		Removed at Norfolk and the original four-bladed screw replaced.
Tennessee		2	19	32	42	New York	do	do	23,870	6,610 74	350 00	Sold with the machinery.
Guerriere		2	17	30	42	Washington	do	do	13,774	3,985 46	290 00	
Pensacola		2	18.6	35	42	Mare Island	Mare Island	do	14,500	4,567 44	503 57	In store at Mare Island. Removed from the vessel without being used and the original screw used.
Ticonderoga		2	15	20	27	Boston	Boston	do	9,240	2,779 25	199 18	Still on the vessel.
Do		2	15	18.6	27	do	Not used	do	9,356	2,283 44	127 75	Removed from the vessel.
Do	Mangin	4	15	20	27	do	Not finished	Not cast		618 00		Never completed.
Lackawanna		2	15	20	27	Mare Island	Mare Island	Composition	12,951	5,126 94	604 75	In store at Mare Island.
											690 27	Refitting four-bladed screw.
Ossipee		2	15	20	27	do	do	do	12,951	5,126 94		Removed from the vessel at Norfolk and a four-bladed screw substituted.
Canandaigua		2	15	20	27	New York	New York	do	9,800	3,145 60	273 00	Still on the vessel.
Do		2	15	20	27	Norfolk	Not used	do	10,110	2,716 45		
Shenandoah		2	15	20	27	Boston	Boston	do	8,891	3,086 66	110 00	Do.
Monongahela		2	15	20	27	do	Not used	do	9,234	2,930 21		Never used.
Swatara		2	12.3	23	25	New York	New York	do	3,988	1,230 04	171·00	
Resaca		2	12.3	23	25	Mare Island	Mare Island	do	3,565	1,247 75		Sold with the vessel.
Nantasket		2	12.3	23	25	Boston	Boston	do	3,997	1,403 81	396 23	In store at Kittery.
Quinnebaug		2	12.6	17	32	Washington	Not used	do				
Wyoming		2	12.6	19	32	do	Boston	do	6,300	969 86	77 60	Cast from old metal. Still on the vessel.
Wachusett		2	12.9	19	32	Norfolk	Norfolk	do	6,610	1,916 98	604 28	Still on the vessel.
Tuscarora		2	12.6	19	32	Washington	Kittery	do	6,500	954 94	458 10	Cast from old metal. Still on the vessel.
Nipsic		2	11	16	23	do	Washington	do	2,800	835 23		Sold.
Saco		2	11	16	23	do	Norfolk	do	3,368	1,142 71	107 14	Still on the vessel.
Yantic		2	11	16	23	New York	New York	do	3,983	1,191 40	190 00	Do.
Kansas	Admiral Porter	2	11	20	27	Washington	Washington	do	3,597	1,603 21		Do.
Do		3	11	18	22	do	Not used	do	3,120	890 29		In store at Norfolk.
Do	Griffiths	2	11	19.	30	do	do	do	5,760	1,988 09		Do.
Shawmut		2	11	16	23	New York	do	do				

TABLE 2.—*Showing the relative efficiency of the four-bladed and two-bladed screw-propellers.*

Names of vessels.	The original four-bladed screws.					The two-bladed screws.					Waste of coal.		Remarks.
	Total number of nautical miles steamed by the vessel, with the four-bladed screws, as recorded by the log-books of the vessels.	Total number of pounds of coal consumed to make that distance.	Mean speed of the vessels, in nautical miles, per hour.	Slip of the screw, in per cent. of its speed.	Time during which the four-bladed screw was used.	Total number of nautical miles steamed by the vessels with the two-bladed screws, as recorded in the log-books of the vessels.	Total number of pounds of coal consumed to make that distance.	Mean speed of the vessels, in nautical miles, per hour.	Slip of the screw, in per cent. of its speed.	Time during which the two-bladed screw was used.	Total number of pounds of coal that would have been consumed had the four-bladed screw been used, calculated on the assumption that the consumption of coal varies as the cube of the speed.	Total number of pounds of coal wasted by the use of the two-bladed screw.	
	d	c	s			d'	c'	s'			$\frac{\frac{c}{d}\, s'^2\, d'}{s^2}$		
Swatara	51035	8789267	7.259	19.55	From Nov., 1865, to July, 1869	10265.5	2475378	4.624	24.38	From Nov., 1869, to Dec., 1871	717376	1758002	The original vessel.
Resaca	21945.98	4661129	6.744	25.428	From Sept., 1866, to Sept., 1869	5511.25	1306800	5.895	37.52	From Sept., 1869, to Nov., 1872	894373	412427	
Nantasket	.....	.....	.....	.....	Four-blade screw not used	12875.36	2764484	4.994	47.34	From Oct., 1869, to July, 1872	1184840	1579644	For performance with four-bladed screw the results of the Swatara and Resaca are taken.
Nipsic	16635.54	3297028	5.995	12.29	From Sept., 1863, to July, 1869	15249.60	3826487	5.113	38.49	From July, 1869, to Dec., 1872	2198453	1628034	The original vessel.
Saco	17869.83	2617440	6.310	13.88	From Sept., 1866, to Dec., 1868	14266.19	2662464	5.646	33.05	From July, 1870, to Sept., 1876	1672969	989495	Performance with the new engine.
Yantic	19763.95	3701247	6.180	13.23	From Aug., 1864, to Nov., 1869	36307.80	7059804	5.468	22.95	From Feb., 1870, to Mar., 1876	5322973	1736831	
Kansas	26340.47	4061935	7.072	10.37	From Sept., 1864, to Sept., 1869	26815.93	4697321	5.367	41.80	From Sept., 1870, to Mar., 1875	2381667	2315654	
Lackawanna	23596.27	6799308	6.263	12.72	From Jan., 1863, to Dec., 1868, & from Dec., 1875, to June 30, 1876.	19474.14	4197380	6.735	15.03	From June, 1872, to Sept., 1874.	6489182	—2291802	
Ticonderoga	58922.25	16255525	7.149	4.326	From May, 1863, to May, 1869	5228.22	1893468	5.533	29.25	From Feb., 1871, to Oct., 1874	863988	1029480	
Canandaigua	46668.50	14162456	6.903	9.47	From Nov., 1865, to Feb., 1869, & from Aug., 1862, to Apr., 1865.	20213.00	6257273	5.104	27.91	From Feb., 1872, to May, 1875	3353444	2903829	
[illegible]ndoah	[illegible]	[illegible]	6.072	6.90	From June, 1863, to May, 1869	17577.23	[illegible]	5.258	20.00	From Aug., 1870, to Apr., 1874	4112790	856229	
[illegible]	[illegible]	[illegible]	5.775	11.11	From Nov., 1869, to Dec., 1869, & from Sept., 1875, to June 30, 1876.	19747.30	[illegible]	4.900	31.11	From Apr., 1870, to Sept., 1875	2787612	3536456	

													of the Guerriere and Delaware are taken.
Guerriere ...	19662. 08	7967170	8. 004	16. 56	From May, 1867, to July, 1869...	7706. 87	4246107	6. 520	28. 36	From Aug., 1870, to Mar., 1872	2072210	2173897	
Albany	9769. 11	3273162	7. 530	3. 622	From Mar., 1868, to July, 1869	3260. 70	1092567	7. 923	16. 01	From Oct., 1869, to Jan., 1870 ..	1209519	— 116952	
Congress	.....	.....	.....	.....	Four-bladed screw not used	39017 38	15771437	6. 614	33. 63	From Mar., 1870, to July, 1876..	12281400	3490037	For performance of the Severn and Congress with four-bladed screws the results of the Albany and Worcester are taken.
Severn	.....	.....	.....	.....	Four-bladed screw not used	5409. 00	2715785	5. 681	42. 54	From Nov., 1869, to Dec., 1871..	1256110	1459675	The performance with the two-bladed screw includes the Mangin screw.
Worcester...	11037. 96	3947832	6. 551	9. 26	From Sept., 1873, to Jan., 1876...	10444. 25	4493917	5. 950	35. 50	From Jan., 1871, to Sept., 1873..	2447744	2046173	The performance of the two-bladed screw includes the (two-bladed) Hirsch screw.
Tennessee...	2317. 54	1977838	8. 615	4. 41	From June, 1866, to Jan., 1867...	3788. 25	1747010	6. 199	15. 94	From Jan. 5, 1871, to Apr. 18, 1871.	1673946	73064	Performance with the original engine.
Wyoming ...	54636. 35	10931481	6. 813	28. 45	From Oct., 1859, to Mar., 1868...	15391. 95	4351144	5. 397	35. 61	From Nov., 1871, to Apr., 1874.	193250	2418644	
Wachusett ..	30272. 40	6970716	6. 302	14. 78	From May, 1862, to Feb., 1868...	15229. 15	4300622	5. 556	21. 66	From June, 1871, to Dec., 1874.	2725673	1574949	
Tuscarora...	67208. 78	14266324	6. 776	18. 20	From Dec., 1861, to Dec., 1868 ..	26837. 67	67663594	4. 794	32. 40	From June, 1872, to July, 1876.	2851544	3914815	
												33979795	

$$10.232 \times \frac{33979795}{2240} = \$109,536.22, \text{ the cost of the wasted coal.}$$

PERFORMANCE OF THE NEW SLOOPS OF WAR.

The machinery of the eight new sloops of war authorized by the act of Congress approved February 10, 1873, are completed; several of the vessels are already in commission. As the Department was anxious to have the best machinery in them that could be obtained, advertisements were published inviting designs, and offering premiums for the best that should be offered. A number of engineering firms and constructing engineers submitted designs, as also did this bureau. They were referred to a board of experts, composed partly of naval and partly of civilian engineers. The report of that board was published in my report for the year 1873. It stated that none of the designs submitted were superior to those of the bureau, which, with some slight modifications, were recommended for adoption. It also recommended the payment of a premium of $500 for the best rejected design. Before work was commenced on any of the vessels their plans and designs were fully completed, and approved by the proper authority, in conformity with the law authorizing their construction. These plans involved and required the arrangement and design of the hulls, armament, sail-power, storage, and berthing capacities, and indicated horses-power required to be developed by the engines in overcoming the resistance of the hulls at the required speeds, all of which were duly considered and decided upon, as set forth in the plans and specifications of their design, and were decided upon by the several chiefs of the appropriate bureaus, on their own responsibility, upon whom the responsibility of the results will rest. These vessels, and those which have been recently rebuilt on new and altered models, were not designed purely for speed, but were intended to subserve the general purposes of cruising war-vessels of moderate size. They were to have greater beam in proportion to their length than the vessels built during the few previous years. This was to allow room to work their batteries, and to carry comparatively heavy ones, and to stand up well under their canvas. Though the draught was to be light, the machinery and boilers were to be all below the water-line, and were to be capable of driving the vessels at a rate of speed fully equal to that of the average foreign vessels of the same class. All these desiderata have been obtained, and it is believed that fighting, steaming, and sailing qualities are combined in these ships at least as successfully as in any others ever built. As the performance of these vessels has been looked for with much interest both by naval officers and others interested in naval affairs and the science of marine engineering, I introduce here a table comparing the dimensions and performance of these ships with the most successful vessels of equal size in the Navy, the machinery of which was designed either by private firms or by this bureau, before and during the late war.

Data and results of trials, at maximum speed, of [illegible] of the Navy when new.

	Names of the vessels.						
	Iroquois.	Wyoming.	Adams.	Ticonderoga.	Shenandoah.	Vandalia.	Swatara.
Length on the load-line, in feet	198.92	198.50	185.	234.33	225.	216.	216.
Breadth, on load-line, in feet	33.83	33.17	35.	38.20	38.33	39.	37.
Load-draught of water in feet	13.17	13.	14.25	15.	15.	17.25	16.42
Displacement, in tons, at load water-line	1488.	1457.	1340.	2526.	2030.	2110.	1914.
Area of greatest immersed transverse section, in square feet	380.	366.	360.	463.	475.	516.6	450.
Ratio of breadth to length	5.88	5.98	5.28	6.13	5.87	5.54	5.84
Length in the vessel occupied by machinery, in feet	54.	52.5	53.	51.	54.	70.50	67.50
Height of boilers above load water-line, in feet	2.83	5.83	.....	.....	.....	.....	.....
Height of load water-line above the boilers, in feet	.....	.....	0.5	1.	1.	3.5	2.83
Total area of grate-surface in the boilers, in square feet	270.75	239.	192.	273.	273.	240.	240.
Indicated horses-power developed by the engines	813.	717.	930.	1304.1	1304.1	1174.	877.25
Revolutions of the engines per minute	77.	73.5	68.	70.	70.	60.	54.34
Speed per hour, in nautical miles	11.7	11.2	11.5	12.	12.	12.06	*11.32
Ratio of area of transverse section to area of grate-surface	.611	.653	.533	.589	.573	.464	.533
Indicated horses-power per square foot of grate surface	3.	3.	4.82	4.80	4.80	4.90	4.87
When the machinery was built	1859	1859	1873	1862	1862	1868–1873	1868–1873
By whom the machinery was designed	Pease & Murphy.	Merrick & Son.	Bureau Steam-Eng.	Bureau Steam-Eng.	Bureau Steam-Eng.	Bureau Steam-Eng.	Bureau Steam-Eng.
Capacity of the coal-bunkers, in tons	166.	185.	140.	332.	365.5	180.85	165.
Number of tons of coal the vessels will consume per day at maximum speed	30.48	28.	19.3	49.6	49.6	28.30	20.15
Number of days the vessel can steam on that quantity of coal and at maximum speed	5.45	6.68	7.25	6.69	7.33	6.39	8.18
Distance, in nautical miles, the vessels can make at maximum speed	1530.36	1795.58	2036.20	1927.	2111.04	1849.	2355.
Distance the vessels can make, at 8½ knots per hour, with the coal contained in their bunkers	3016.	3210.	3582.	4000.	4404.	3860.	4900.

* Trial on four-fifths boiler-power; full-speed trial never made.

For comparison with the vessels having engines recently designed I have selected the Wyoming and Iroquois, they being favorite vessels, and regarded as having a good speed. They were built in 1859 and were duplicated after the late war commenced, and their sister ships, the Tuscarora and Oneida, proved themselves to be equally successful. The Ticonderoga and Shenandoah, built in 1862, were intended to have the same speed as the Wyoming and Iroquois, but were to carry a much greater quantity of coal. The machinery in these four vessels occupies about equal space in the hulls, though the space occupied in the latter two is less in comparison with the size of the vessels than in the former. All these vessels were intended to be fair steaming and sailing ships. In a word, they were all built with the same view. Now, assuming them to be equally well designed for this purpose, their resistance will be represented by the area of their greatest immersed midship-sections, and, as they were all designed to burn the same kind of coal, (anthracite,) the area of their grates may be taken to represent the boiler-power. Their efficiency as steamers should be measured by the cubes of the speeds, divided by the boiler-power per square foot of midship-section. The boiler-powers will then compare as follows, viz:

Wyoming	1.0000
Iroquois	1.2185
Adams	1.3263
Ticonderoga	1.3635
Shenandoah	1.4016
Vandalia	1.7573

The economy of the new engines is quite as apparent as the above compared efficiency of the boilers. The relative economy of the engines may be measured by the weight of coal consumed in a given time to produce a horse-power.

Name of vessel.	Number of pounds of coal per horse-power per hour.
Wyoming	3.641
Shenandoah	3.550
Ticonderoga	3.550
Iroquois	3.500
Swatara	2.030
Adams	1.920
Vandalia	2.250

And in their economy they will compare as follows:

Wyoming	0.5273
Shenandoah	0.5408
Ticonderoga	0.5408
Iroquois	0.5455
Vandalia	0.8533
Swatara	0.9455
Adams	1.0000

So it is evident that the best of the engines recently designed is 45 per cent. more economical than the best of its predecessors. It is useless here to multiply these examples, though a large number could be given.

SAFETY OF OUR VESSELS.

While the foreign mails have brought us, during the past year, news of many disastrous accidents to the machinery or boilers of vessels belonging to the navy of one of the great European powers, some of which have been accompanied by great loss of life and the complete disabling of the vessels for months, it is gratifying to me to be able to report that no serious accident has happened to the machinery or boilers of any of our naval

vessels since my last report, and that more than five years have passed since a life has been lost from such a cause. The machinery of most of our vessels has been designed by this bureau, and, while having a due regard to compactness and the smallness of the space to be occupied, the bureau has still made the moving parts of the engines strong enough to do the work expected of them in service without subjecting the materials of which they are constructed to undue or dangerous strains. The boilers, too, have been built with special regard to their safe and economical operation, and all the means which ingenuity could devise or experience suggest have been used to render them in every respect safe and reliable. While under construction, whether at navy-yards or elsewhere, the work is carefully superintended by engineer officers, who are specially detailed for that duty, and from the time their construction is commenced to the time when the machinery is finally worn out and removed, it is always in the charge of engineer officers who are held to a strict responsibility for its proper management and careful preservation.

PERSONNEL OF THE ENGINEER CORPS.

Many vacancies still exist in the list of assistant engineers, but these, it is hoped, will be eventually filled by the graduates of the engineering branch of the Naval Academy, and by the appointment of such candidates from civil life as may prove themselves to be thoroughly qualified. These latter, however, are not likely to be numerous, as the standard of qualification is a high one, and cannot well be lowered in view of the important and responsible nature of the duties to be performed. Of those who apply, it is found that a considerable proportion fail to pass the rigorous physical examination which is very properly required to precede the professional one. Of those who pass physically, about one-half are found deficient professionally. The successful ones are usually those who have been engaged for a time in the actual building of steam-machinery, and have also studied at some one or other of the technological institutions which are to be found at or near the principal centers of our manufacturing districts.

During the past year, at the request of the director-general of the Centennial Exhibition, leave of absence was granted to a chief engineer in the Navy, who was placed at the head of the bureau of machinery of the exhibition and in charge of Machinery Hall. Most of his assistants on this duty were ex-members of the Naval Engineer Corps; and I may here remark that the services of many ex-members of this corps have been found valuable and highly appreciated by State and municipal governments in the prosecution of public improvements, as well as by schools of engineering, as instructors, and by private corporations and employers in the management of manufacturing and engineering works.

NAVAL ACADEMY.

During the summer vacation the steam-building had a small extension built to it, and now affords sufficient facilities for the practical instruction of the cadet engineers in the construction of steam-machinery. The summer cruise of the practice-steamer Mayflower was an eminently satisfactory one. She visited the principal northern and eastern ports and navy-yards, where the cadets, with their instructors, had ample opportunity of seeing all the leading ship and engine building establishments, both public and private. Proprietors of private establishments showed their interest in the cause of scientific education by gladly

throwing open their works to the inspection of the cadets. They have also presented to the academy models of various machines, which were required by the institution, to be used for purposes of instruction.

ENGINEER'S FORCE ON SHIPBOARD.

Since my last report no complaints have been received of the inefficiency or insufficiency of the engineer's force on shipboard. The restoration of the ratings of first and second class fireman to the engineer's force, and their being considered a permanent part of that force, has had a good effect upon the discipline and zeal of these men, has made them more contented, and the best of them will be more likely to reenlist and become "continuous-service" men than has heretofore been the case. The dullness of trade, by throwing many excellent mechanics out of employment, has induced a better class of men to enter the service as machinists. In order to retain their services permanently, and to secure proper discipline in the engine-room, where they are often necessarily left in immediate charge, I would respectfully recommend that a greater distinction should be made between them and the firemen than now exists, especially in the matter of granting them more frequent liberty on shore, when they can be spared from duty, and that they should be allowed a chest or locker in place of a bag in which to keep their clothes.

EXPERIMENTS.

Appended, and marked "A," is a report of some experiments made on the combustion, both in the lump and in a finely-pulverized state, of semi-bituminous coal from the mines of Cumberland, Md. Marked "B" is a report of the experiments made to determine the relative merits of a common screw and that patented by Mr. N. H. Patterson, of Tennessee.

Very respectfully,

WM. W. W. WOOD,
Chief of Bureau.

Hon. GEO. M. ROBESON,
Secretary of the Navy.

A.

Experiments made with a horizontal fire-tube boiler in East Boston, Mass., to ascertain the economic vaporization given by semi-bituminous coal from the mines of Cumberland, Md. burned on the grate wholly in the state of lumps, with air supplied by a fan-blower delivering both below and above the grate; and burned partly in the lump state on the grate and partly in a very finely pulverized state, uniformly disseminated throughout the furnace above the grate, the air being supplied by another fan-blower delivering both below and above the grate, and carrying with it in the latter case the pulverized fuel which is thus blown into the furnace.

The experiments recorded in this paper were made on the process of Messrs. Whelpley & Storer for effecting the complete and rapid combustion of coal-dust in the furnaces of steam-generating boilers. The system of these gentlemen consists in maintaining a bed of ignited lump-coal on the grate-bars of the furnace in the usual manner, and then, by means of a blast of atmospheric air, in blowing into the furnace above this bed of ignited lump-coal, finely pulverized coal—pulverized, indeed, to an impalpable powder. There is thus delivered into the furnace, above the ignited lump-coal, an intimately-mixed mass of air and coal-dust, the latter obtaining the oxygen for its combustion from the former. The lump-coal obtains the oxygen for its combustion from the air ascending through the spaces between the grate-bars in the usual manner.

Without the bed of ignited lump-coal beneath, the combustion of the coal-dust above it could not be maintained, and it is considered equally necessary by the patentees that an arch of fire-brick should be interposed between the consuming masses and the metal of the boiler directly over the grate-bars, in order to retain the highest possible temperature in the gases in the furnace for the purpose of still more effectually securing the combustion of the coal-dust. The brick arch is intended to intercept and radiate back the heat radiated to it from the ignited lump-coal on the grate-bars. Of course, the atmospheric air will be heated to only an inappreciable degree by either the original radiation or its reflex, but the coal-dust will be.

With the exception of this brick arch, the boiler may be of any design. The lump-coal is first reduced by a patented apparatus (which is the only portion of Messrs. Whelpley & Storer's process that is patented or patentable) to the state of impalpable powder, and it is then fed, together with air, through a conduit to the central portion of an ordinary centrifugal or fan blower, whose revolutions draw it in and drive it through another conduit which discharges it into the front of the furnace through an air-tight aperture. The lump-coal is fired in the usual manner, through the furnace-door, and the air for its combustion is supplied by another fan-blower delivering into a closed ash-pit beneath the grate-bars. The whole combustion is therefore effected by artificial draught depending on mechanism; and the force of this draught is easily regulated from the least to the greatest desirable in burning coal; it can also be distributed at will, so as to preserve within certain limits any required proportion between the weights of lump and dust coal consumed in the same time. The two fan-blowers, in the experiments about to be described, were operated by the same steam-engine which effected the coal-crushing and worked the feed-pump of the boiler.

The patentees imagine that, compared with the combustion of lump-coal, a more nearly perfect combustion was to be obtained with impalpably fine coal-dust mixed thoroughly with and suspended in air, thereby presenting to the latter, for a given weight of coal, an immensely greater surface than in the lump-state. They imagined, too, that, from the same cause, a much higher rate of combustion would be obtained than probable with lump-coal, by which means a boiler with a much smaller grate-surface, but with the same heating surface, would furnish with the coal-dust the same quantity of steam in equal time, and with greater economy of evaporation per pound of fuel than with the lump-coal. It was to determine the truth or error of these assumptions that the following experiments were made. They were intended to have been very extensive, embracing anthracite and coke as well as bituminous and semi-bituminous coals; and also a species of exceedingly hard anthracite found in Rhode Island, which contains about 40 per centum of incombustible mineral matter, and is worthless from its difficulty of ignition and slowness of combustion for burning in lumps. The results from different rates of combustion and of different proportions of dust to lump coal consumed in equal time, was likewise to have been ascertained, but the experiments were prematurely closed, as the Government could not longer dispense with the services of the naval engineers making them. The entire expense of the experiments, other than the pay of the engineers, was borne by the patentees.

The following is a description of the boiler and of the coal and air-feeding apparatus.

BOILER.

The boiler is composed of a horizontal cylindrical shell 40 inches in external diameter and 10 feet in extreme length. The flat ends of this shell are the tube-plates, and in them are secured seventy-four wrought-iron tubes of 2.05 inches inside and 2¼ inches outside diameter; extreme length of tubes, 10 feet. The tubes are horizontal; they are surrounded by the water, and the gases of combustion pass through them. They are arranged in vertical rows, one over the other.

The shell is set in brick masonry, and the furnace, which is composed of brick masonry, is placed beneath its front end. From this furnace the gases of combustion pass along 6 feet 6 inches of the shell, embracing its semi-circumference for that length, then ascend a back smoke-connection of 12 inches length and 40 inches width formed in the masonry, then return horizontally through the tubes, and emerge into the uptake, formed also in the masonry for its height, and on the top of which the smoke-pipe is placed. An iron door in the lower part of the uptake, opposite the tubes, allows them to be swept. The uptake is 15 inches long and 40 inches wide.

The front of the furnace and ash-pit is in the same vertical plane with the front of the uptake. The ash-pit is 20 inches wide in the clear, and 4 feet 5 inches long; its sides are formed of brick masonry, and its back is a brick wall 10½ inches thick. Its front is closed by a cast-iron door shutting air-tight.

From the bottom of the ash-pit to the top of the grate-bars is 20 inches. A horizontal cast-iron dead-plate 15 inches wide extends from the furnace-front to the grate-bars, which are horizontal and on the same level with the plate. They are 3 feet 2 inches long, and occupy a width of 20 inches, making the grate-surface 5.277 square feet. On each side of this surface and of the dead-plate is brick masonry, the top of

which, starting from the top of the grate-bars, inclines outward, so that at a height of 6 inches it touches the side of the furnace at its greatest width of 40 inches. From this point a brick arch 2½ inches thick, the under side of which has a radius of 31 inches, extends over the entire grate-surface and dead-plate. The back of the furnace or bridge-wall is formed by a vertical extension of the back of the ash-pit; its top is an inverted curve of 52 inches radius until it intercepts the arch above it. The front of the furnace is of cast iron, and is fitted with the usual door.

The air-conduit or blast-pipe which delivers air for combustion in the closed ash-pit is 5 inches in diameter. It lies beneath the fire-room floor, and discharges the air vertically upward beneath the grate-bars.

The coal-dust conduit which delivers the pulverized fuel and the air for its combustion into the front of the furnace, is 5 inches in diameter, diminishing at its point of discharge to 2 inches diameter. It lies above the fire-room floor, and discharges into the furnace horizontally.

The shell of the boiler is of ¼ inch thick iron, the ends of ⅜ inch thick iron, and the tubes are of $\frac{1}{10}$ inch thick iron.

The following are the principal proportions of the boiler when experimenting with pulverized coal, columns C and D of the following table, the brick arch being present over the grate-bars:

Heating-surface in the bottom of the boiler-shell	34.033 square feet.
Heating-surface in the two ends of the boiler-shell	11.351 square feet.
Heating-surface in the 74 tubes, calculated for their inner diameter of 2.05 inches	397.133 square feet.
Total heating-surface	442.517 square feet.
Length of grate-bars	3 feet 2 inches.
Breadth occupied by grate-bars	1 foot 8 inches.
Area of grate-surface	5.277 square feet.
Area for the passage of the gases of combustion over the bridge-wall of the furnace	0.764 square foot.
Area through tubes for the passage of the gases of combustion	1.696 square foot.
Area of the smoke-pipe for the passage of the gases of combustion	1.867 square foot.
Capacity of steam-room above 3 inches above top of tubes	13.5 cubic feet.
Ratio of the heating to the grate surface	83.538 to 1.000
Ratio of the grate-surface to the area over the bridge-wall	6.907 to 1.000
Ratio of the grate-surface to the area through the tubes	3.112 to 1.000
Ratio of the grate-surface to the area of the smoke-pipe	2.827 to 1.000
Diameter of the smoke-pipe, (inner)	1 foot 6½ inches.
Height of the smoke-pipe above the level of the grate-bars	40 feet.
Distance traversed by the gases of combustion from the center of the furnace to their delivery into the uptake	20 feet.

The only change made when experimenting with lump-coal, columns A and B in the following table, was the removal of the portion of the brick arch which lay immediately beneath the shell of the boiler, except the small portion necessary to support the shell and the brick partition separating the uptake from the chamber behind the bridge-wall. This removal increased the heating-surface in the bottom of the boiler-shell, and changed its proportion, but left everything else as before. The heating-surface in experiments A and B was as follows:

Heating-surface in the bottom of the boiler-shell	48.431 square feet.
Heating-surface in the two ends of the boiler-shell	11.351 square feet.
Heating-surface in the seventy-four tubes, calculated for their inner diameter of 2.05 inches	397.133 square feet.
Total heating-surface	456.915 square feet.

Ratio of the heating to the grate surface, 86.586 to 1.000.

MANNER OF MAKING THE EXPERIMENTS.

The experiments were conducted by a board composed of Chief Engineers Macomb, Kellogg, and Johnson, United States Navy, assisted by four assistant engineers, who stood regular watches of four hours, as at sea, and personally weighed, measured, and counted all the quantities recorded. The process with each experiment was the same, and as follows:

Steam was first raised with wood to the pressure of 40 pounds per square inch above the atmosphere; and then the water in the boiler being adjusted to 3 inches above the top of the tubes, the coal was fired, the number on the counter and the time were noted, the small engine started, and the experiment held to commence.

Each experiment lasted exactly 48 consecutive hours, at the expiration of which, the water-level and steam-pressure being the same as at the commencement, the fire was promptly hauled from the furnace and wetted out, and the unconsumed coal picked out, weighed, and deducted from the amount expended.

All the ashes and refuse, including the sweepings of the tubes, and the accumulations behind the bridge-wall and in the uptake, were weighed on the same scales and in the same tub with the coal.

Every pound of coal consumed was carefully weighed. It was the first quality of semi-bituminous from the Cumberland mines of Maryland; and a separate account was kept of the quantities consumed in the lump and in the pulverized state during each hour of the experiment.

All the water pumped into the boiler was previously carefully measured in a cylindrical iron tank provided with an overflow-pipe, to which it was each time filled, and then pumped out entirely dry by the boiler-feed pump. The tank was filled by a lifting-pump, which required from seven to eight minutes to fill it, according to the speed at which the small engine ran.

The water-level in the boiler was shown by a glass gauge.

The bed of lump-coal on the grate-bars was kept 5 inches thick, well cleaned and free of holes. The boiler-tubes were cleaned or "blown out" once in every four hours, by opening the uptake-door and inserting successively in each tube a short piece of ¾-inch diameter gas-pipe, connected by means of gum steam-hose to the steam-pipe. The average time required for thus cleaning all the tubes was 5 minutes.

At the end of each hour there was entered into the columns of the tabular record kept by the board the number of pounds of lump and of pulverized coal thrown into the furnace; the height of the barometer; the temperatures of the external atmosphere of the engine-room, of the fire-room, of the water in the tank, of the same water after passing through the heater and before it entered the boiler, and of the products of combustion in the boiler-uptake and in the top of the chimney. In other columns there was entered the state of the weather except during experiment C. At the end of each experiment all the ash and sweepings were weighed.

The temperatures were taken by ordinary mercurial thermometers graduated to Fahrenheit's scale. The temperature of the atmosphere was given by one hung outside the building, in the shade. The one giving the temperature of the engine-room hung 9 feet from the engine, and the one giving the temperature of the fire-room hung 3 feet 6 inches from the boiler-front. The feed-water temperatures, both in the tank and after passing the heater, were given by thermometers kept constantly immersed.

The temperature of the gases of combustion in the boiler-uptake was obtained from a thermometer suspended in it through a hole in a top-plate, the thermometer being opposite the center of the boiler end and 9 inches from it. The temperature of these gases in the top of the chimney was given by a thermometer suspended in it 14 inches below the top and 38 feet 10 inches vertically above the grate-bars.

The small engine was non-condensing, and exhausted into a very large heater, through which the feed-water passed on its way from the tank to the boiler, receiving therein a considerable increase of temperature. The cylinder was 10 inches in diameter with a 20-inch stroke of piston. The diameter of the piston-rod was 1¼ inches, giving a net area of piston of 77.9265 square inches. This engine operated a length of 62 feet of shafting, exclusive of a counter-shaft of 33 feet length. It worked the lifting-pump supplying the tank, the feed-pump supplying the boiler, the two fan-blowers, and the pulverizing apparatus. The length of belting used was 179 feet. At the end of each hour an indicator diagram was taken from each end of the cylinder, and on it was recorded the number of double strokes of piston made per minute at the time. The cylinder-pressures given in the table are the means of all the diagrams taken. A large number of diagrams was also taken with the unloaded engine; that is, with the pumps not pumping, with the air prevented from entering the fan-blowers, and with the pulverizing apparatus free of coal, but with the shafting running, in order to ascertain the net pressure required to do the work *per se*, the work consisting of the pumping, the fan-blowing, and the pulverizing.

The number on the engine-counter was noted in the tabular record at the commencement of each experiment, and at the end of each hour, and in an adjacent column was entered the number of double strokes made per minute by the engine's piston, so as to avoid possibility of error.

The safety-valve of the boiler was weighted by an accurate gauge to "blow off" at 40 pounds steam-pressure per square inch above the atmosphere. All the steam used by the small engine was taken from the boiler, and the remainder was discharged through the safety-valve into the air.

EXPLANATION OF THE TABLE.

The experiments were four in number, two with lump-coal burned alone, and two with lump-coal burned on the grates and with pulverized coal burned disseminated in

air in the furnace above the lump-coal. The data and results of these experiments will be found respectively in columns A, B, C, and D of the table. In experiments A and B, the brick arch which was present over the whole grate-surface in experiments C and D was partly removed, thereby increasing the area of heating-surface, which in experiments A and B with lump-coal alone was 456.915 square feet; and in experiments C and D with lump and pulverized coal, 442.517 square feet. As the patentees considered the brick arch a necessity in their system, its disadvantage in diminishing the area of the heating-surface should be allowed to operate against that system in a comparison with any other. For this reason the arch was removed when experimenting with lump-coal alone. It must be observed here, however, that the enormous quantity of heating-surface in proportion to grate-surface, which the patentees had given their boiler, prevented the reduction of heating-surface by the presence of the arch from being nearly as disadvantageous as it would have been with the boiler-proportions of ordinary practice. In experiments A and B the heating-surface was 86.586 to 1.000 of grate-surface, while in experiments C and D it was 83.538 to 1.000. The usual proportion being about 25 to 1, and the quantity of surface affected by the brick arch being constant, it will be readily perceived that the effect of the arch will be considerable with the latter proportion, while it was probably insensible with the former. Under the actual conditions, then, of the experimental boiler, the experiments made with lump and pulverized coal gave higher results, comparatively to those made with lump-coal alone, than would have been the case had the boiler been constructed of the usual proportions of heating to grate surface.

For facility of reference, the lines containing the quantities are numbered, and the quantities arranged in groups.

For the same purpose, each column containing the data and results of an experiment is lettered.

Line 1 gives the date of commencing each experiment. The columns, it will be observed, are in the order of the dates of the experiments.

Line 2 gives the state of the weather for all the experiments except C.

TOTAL QUANTITIES.

Line 3 contains the duration of each experiment in consecutive hours.

Line 4 contains the total number of pounds of water pumped from the tank into the boiler. It was previously carefully measured in the tank, allowance being made for the temperatures on line 20.

Line 5 contains the total number of pounds of coal consumed on the grate-bars in the lump state. Every pound was carefully weighed on a Fairbanks platform-scales, tested before commencing the experiments.

Line 6 contains the total number of pounds of the same coal consumed in the pulverized state, and fed into the furnace disseminated in air. Every pound was weighed on the same scales as the lump-coal.

Line 7 contains the sum of the quantities on lines 5 and 6, and gives the total aggregate weight of coal consumed in both states.

Line 8 contains the total number of pounds of refuse in ash, clinker, and soot from the weight of coal on line 7.

Line 9 contains the total aggregate weight of combustible matter in the coal in both states. It is the quantities on line 7 less those on line 8.

Line 10 shows the per centum which the quantities on line 9 are of those on line 7.

Line 11 shows the per centum which the quantities on line 5 are of those on line 7.

Line 12 shows the per centum which the quantities on line 6 are of those on line 7.

Line 13 contains the total number of double strokes made by the piston of the engine, as taken by a self-registering counter.

COMBUSTION.

Line 14 contains the number of pounds of coal consumed per hour. It is the quotient of the division of the quantities on line 6 by those on line 3.

Line 15 contains the number of pounds of the combustible portion of the coal consumed per hour. It is the quotient of the division of the quantities on line 9 by those on line 3.

Lines 16 and 17 contain, respectively, the number of pounds of coal and of its combustible portion consumed per hour per square foot of grate-surface. They are the quotients of the division of the quantities on lines 14 and 15 by 5.277, the number of square feet in the grate-surface.

Line 18 contains the fraction of a pound of combustible consumed per hour per square foot of heating-surface. It is the quotient of the division of the quantities on line 15 by 456.915 for experiments A and B, and by 442.517 for experiments C and D, these numbers being the square feet of heating-surface employed in the respective experiments.

TEMPERATURES.

Lines 19, 20, and 21 contain, respectively, in degrees Fahrenheit the average temperature of the external atmosphere of the engine-room and of the fire-room.

Line 22 contains the average temperature in degrees Fahrenheit of the boiler feed-water when it was measured in the tank. And line 23 contains the average temperature of the same water after it had been through the heater interposed between the tank and boiler. The increase of temperature received by the feed-water in the heater was due to the abstraction of heat from the exhaust-steam of the small engine, which discharged through the heater into the air.

Lines 24 and 25 contain the average temperature in degrees Fahrenheit of the gases of combustion. The first gives it in the uptake, the last at the top of the chimney.

Line 26 shows the average height of the barometer in inches of mercury.

ENGINE.

Line 27 shows the average number of double strokes of engine's piston made per minute. It is the quotient of the division of the quantities on line 11 by 2,880, the number of minutes the experiments continued.

Line 28 contains the average steam-pressure in the boiler, in pounds, per square inch above the atmosphere, as given by an Ashcroft spring-gauge. It was kept exactly the same in all the experiments.

Line 29 shows the proportion of the throttle-valve, which was open during the experiments. It remained unchanged during each experiment.

Line 30 contains the mean gross effective steam-pressure on the piston of the small engine in pounds per square inch. It is the mean of ninety-six indicator-diagrams for each experiment; a diagram being taken at the end of each hour from each end of the cylinder.

Line 31 contains the pressure on the piston in pounds per square inch, required to work the machinery *per se;* that is to say, to work the engine and shafting, with the water shut off from the pumps, the air shut off from the fan-blowers, and no coal in the pulverizer. It is the mean of a large number of indicator-diagrams taken at the beginning and end of each experiment under these conditions.

Line 32 contains the net pressure upon the engine-piston in pounds per square inch. It is the remainder of the quantities on line 30 after subtracting those on line 31.

Lines 33 and 34 contain the gross effective and net horses-power developed by the small engine. These powers are calculated respectively for the piston-pressures on lines 30 and 32.

VAPORIZATION.

Lines 35 and 36 contain the total number of pounds of water that would have been vaporized in the boiler had the water been supplied at respectively the temperatures of 100 and 212 degrees Fahrenheit, instead of the temperature on line 23; and had the vaporization been effected under a pressure of 14.687 pounds per square inch above zero, instead of under the pressure on line 28.

Lines 37 and 38 contain the number of pounds of water vaporized from the temperature of 100 degrees Fahrenheit, and under the atmospheric pressure of 14.687 pounds per square inch by one pound of coal, and by one pound of the combustible portion of that coal, respectively.

Lines 39 and 40 contain the number of pounds of water vaporized from the temperature of 212 degrees Fahrenheit, and under the atmospheric pressure of 14.687 pounds per square inch by one pound of coal, and by one pound of the combustible portion of that coal, respectively.

Table exhibiting the data and results of the experiments made with a horizontal fire-tube boiler in East Boston, Mass., to ascertain the comparative economic vaporization given by semi-bituminous coal from the Cumberland mines of Maryland, burned on the grate wholly in the state of lumps, with air supplied by a fan-blower delivering both below and above the grate; and burned partly in the lump state on the grate and partly in a very finely pulverized state uniformly disseminated throughout the furnace above the grate, the air being supplied by another fan-blower delivering both below and above the grate, and carrying with it, in the latter case, the pulverized fuel, which is thus blown into the furnace.

Number of line.		Burning lump coal alone.—Brick arch removed from over part of grate-surface. Air for combustion supplied below and above grate-surface by a fan-blower.		Burning lump coal on the grates and pulverized coal in the furnace above the lump coal.—Brick arch in place over grate-surface. Air for combustion of the lump coal supplied below the grate-surface by a fan-blower. Air for combustion of the pulverized coal supplied above the lump coal by the same fan-blower, being mixed with the pulverized fuel which it blows into the furnace.	
		Medium rate of combustion.	Maximum rate of combustion.		
		A.	B.	C.	D.
1	Date of commencing the experiment	1 p. m., Dec. 9, 1867.	Mer., Dec. 17, 1867.	Mer., Nov. 14, 1867.	Mer., Dec. 2, 1867.
2	State of the weather	Clear 40 hrs., snowing 8 hrs. Light breeze.	Clear 36 hrs., cloudy 12 hrs. Bet. a light and gentle breeze.	.....	Clear 33 hours, cloudy 15 hrs., of which it snowed 5 hrs. Bet. a light and gentle breeze.
	TOTAL QUANTITIES.				
3	Duration of the experiment in consecutive hours	48.	48.	48.	48.
4	Pounds of water pumped into the boiler from the tank	27,094.	53,268.	26,606.	29,456.
5	Pounds of semi-bituminous coal consumed in the state of lumps	3,168.	5,775.	1,791.	1,392.
6	Pounds of semi-bituminous coal consumed in the pulverized state	.....	.....	1,377.	1,776.
7	Aggregate number of pounds of semi-bituminous coal consumed	3,168.	5,775.	3,168.	3,168.
8	Pounds of refuse in ash, clinker, and soot, from the aggregate number of pounds of semi-bituminous coal consumed	353.	490.	282.	304.
9	Aggregate number of pounds of combustible consumed	2,815.	5,285.	2,886.	2,864.
10	Per centum of the coal in refuse of ash, clinker, and soot	11.15	8.48	8.90	9.59
11	Per centum of the total coal consumed in the lump state	100.00	100.00	56.50	43.94
12	Per centum of the total coal consumed in the pulverized state	.....	.....	43.50	56.06
13	Number of double strokes made by the engine's piston	231,777.	231,459.	228,534.	230,816.
	COMBUSTION.				
14	Pounds of coal consumed per hour	66.000	120.312	66.000	66.000
15	Pounds of combustible consumed per hour	58.646	110.104	60.125	59.667
16	Pounds of coal consumed per hour per square foot of grate-surface	12.507	22.615	12.507	12.507
17	Pounds of combustible consumed per hour per square foot of grate-surface	11.113	20.865	11.394	11.307
18	Pounds of combustible consumed per hour per square foot of heating-surface	0.128	0.241	0.136	0.135
	TEMPERATURES.				
19	Temperature, in degrees Fahrenheit, of the external atmosphere	12.6	20.7	34.5	31.2
20	Temperature, in degrees Fahrenheit, of the engine-room	36.5	56.6	43.8	53.2
21	Temperature, in degrees Fahrenheit, of the fire-room	45.3	60.	55.3	61.4
22	Temperature, in degrees Fahrenheit, of the water in the tank	37.	44.	47.1	42.
23	Temperature, in degrees Fahrenheit, of the feed-water after passing through the heater	185.	122.	193.	190
2	Temperature, in degrees Fahrenheit, of the gases of combustion in the boiler uptake	383.3	485.1	391.7	372

Table exhibiting the comparative economic vaporization of semi-bituminous coal, &c.—Cont'd.

Number of line.		Burning lump coal alone.—Brick arch removed from over part of grate-surface. Air for combustion supplied below and above grate-surface by a fan-blower.		Burning lump coal on the grates and pulverized coal in the furnace above the lump coal.—Brick arch in place over grate-surface. Air for combustion of the lump coal supplied below the grate-surface by a fan-blower. Air for combustion of the pulverized coal supplied above the lump coal by the same fan-blower, being mixed with the pulverized fuel which it blows into the furnace.	
		Medium rate of combustion.	Maximum rate of combustion.		
		A.	B.	C.	D.
25	Temperature, in degrees Fahrenheit, of the gases of combustion in the top of the chimney	206.8	287.6	215.0	207.3
26	Barometer, in inches of mercury	29.86	29.89	29.69	29.75
	ENGINE.				
27	Number of double strokes of engine's piston made per minute	80.478	80.368	79.352	80.144
28	Steam-pressure in boiler, in pounds, per square inch, above the atmosphere	40.	40.	40.	40.
29	Proportion of throttle-valve open	0.052	0.055	0.063	0.063
30	Mean gross effective pressure on piston, in pounds, per square inch	5.09	5.25	6.50	6.50
31	Pressure on piston, in pounds, per square inch, required to work the unloaded machinery	4.30	4.30	4.30	4.30
32	Net pressure on piston, in pounds, per square inch	0.79	0.95	2.20	2.20
33	Gross effective horses-power developed by the engine	3.225	3.321	4.060	4.101
34	Net horses-power developed by the engine	0.500	0.600	1.374	1.388
	VAPORIZATION.				
35	Pounds of water that would have been vaporized, had it been supplied at the temperature of 100 degrees Fahrenheit, and vaporized under a pressure of 14.687 pounds, per square inch, above zero	25,516.848	53,300.967	24,857.091	27,602.880
36	Pounds of water that would have been vaporized, had it been supplied at the temperature of 212 degrees Fahrenheit, and vaporized under a pressure of 14.687 pounds, per square inch, above zero	28,498.256	59,528.692	27,761.412	30,828.021
37	Pounds of water vaporized from 100 degrees Fahrenheit by one pound of coal	8.055	9.230	7.846	8.713
38	Pounds of water vaporized from 100 degrees Fahrenheit by one pound of combustible	9.065	10.065	8.613	9.638
39	Pounds of water vaporized from 212 degrees Fahrenheit by one pound of coal	8.996	10.308	8.763	9.731
40	Pounds of water vaporized from 212 degrees Fahrenheit by one pound of combustible	10.124	11.264	9.619	10.464

REMARKS.

In examining the results of experiments A and B, in which lump-coal was burned alone, we find that, notwithstanding nearly twice as much coal was burned per hour in experiment B as in experiment A, yet the economic vaporization was greater in the former than in the latter by $\left(\text{line 40, } \frac{11.255-10.120\times100}{10.120}=\right)$ 11.21 per centum of the latter This arises, probably, in part from the enormous ratio of the heating to the grate surface, namely, 86.586 to 1.000, which was sufficient to cool down the gases of combustion in the uptake with the greater rate of combustion to within 101.8° Fahrenheit of the temperature (line 24) with the lesser rate of combustion; but principally from the less air in proportion to coal consumed furnished in experiment B than in experiment A. It will be observed that in both experiments the fan-blowers were driven at the same speed, and of course threw into the furnace the same quantity of air in equal time; hence the proportion of air supplied to the combustible matter in experiment B must have been to that supplied in experiment A inversely as

the weights of this matter consumed in equal times, or as 2815 to 5285, line 9. The effect of the too great quantity of air in experiment A was to carry off a large portion of heat in raising its temperature from that of the fire-room (line 21) to that of the gases of combustion in the boiler-uptake, (line 24,) so that, notwithstanding the gases of combustion in the boiler-uptake were at 101.8° Fahrenheit less temperature in experiment A than in experiment B, yet the economic vaporization was 11.21 per centum worse. The lower temperature in the uptake only indicates a higher economic vaporization on the supposition that the proportion of air to combustible matter is the same.

In examining the results of experiments C and D, in which lump-coal was burned on the grate-bars and pulverized coal in the furnace above them, we find that, although the aggregate weight of combustible matter burned per hour was almost exactly the same in both, yet the economic vaporization was greater in the latter than in the former by $\left(\text{line 40, } \frac{10.761-9.617\times100}{9.617}=\right)$ 11.89 per centum of the former. In these two experiments it will be observed that the ratio of lump to pulverized coal is reversed. In experiment C the pulverized coal is 43.50 per centum of the aggregate consumed, leaving 56.50 per centum to be burned in the lump state; while in experiment D the pulverized coal is 56.06 per centum of the aggregate consumed, leaving the lump-coal 43.94 per centum of that aggregate. The results of the experiments, however, do not warrant attributing the higher economic vaporization in experiment D to the higher proportion which the pulverized bears to the lump-coal in that experiment over what it does in experiment C. Experiment C was the first made, and experiment D was the same, repeated, but burning a higher proportion of pulverized coal. And it was repeated with very great care in the firing. In both experiments, C and D, about the same proportion of air to combustible matter consumed was supplied, and as the temperature of the gases of combustion in the boiler-uptake only differed 19.7 degrees Fahrenheit, the difference in the economic vaporization must be attributed to difference in the firing.

A very correct comparison can be made of the relative economic efficiency of semi-bituminous coal burned wholly in the lump state and partly in the lump and partly in the pulverized state, by means of the economic vaporization in experiment A, during which the coal was consumed in the lump state alone, and the mean economic vaporization in experiments C and D, during which the coal was consumed partly in the lump and partly in the pulverized state; because in these three experiments the rate of combustion and the supply of air were almost exactly the same; in fact, all the conditions were sensibly the same.

Now, in experiment A, 11.113 pounds of lump-coal were consumed per hour per square foot of grate-surface, with 80.478 double strokes of the piston of the engine supplying air, the resulting vaporization per pound of the combustible portion of the coal being 10.124 pounds of water from the temperature of 212 degrees Fahrenheit and under the atmospheric pressure.

The mean rate of combustion in experiments C and C was $\left(\frac{11.394+11.307}{2}=\right)$ 11.350 pounds of the combustible portion of the coal consumed per hour per square foot of grate-surface, with $\left(\frac{79.352+80.144}{2}=\right)$ 79.748 double strokes per minute of the piston of the engine supplying air, the resulting vaporization per pound of the combustible portion of the coal being $\left(\frac{9.619+10.764}{2}=\right)$ 10.192 pounds of water from the temperature of 212 degrees Fahrenheit and under the atmospheric pressure.

The two economic results—namely, 10.124 and 10.192—are almost identical, and show that when semi-bituminous coal is burned at the same rate of combustion, with the same *pro rata* air-admission, and under the same circumstances, it gives the same economic vaporization, whether it be consumed wholly in the lump state, or partly in the lump and partly in the pulverized state, or wholly in the pulverized state. This equality of economic result is also proven by the fact of the equality of the temperature of the gases of combustion in the comparable experiments when leaving the boiler. In experiment A, burning lump-coal alone, this temperature was 383.30 degrees Fahrenheit, while the mean of the temperatures of the gases of combustion in the boiler-uptake during experiments C and D, during which partly lump-coal and partly pulverized coal were consumed, was $\left(\frac{391.7+372.0}{2}=\right)$ 381.85 degrees Fahrenheit.

This comparison is made, however, for the heating effects alone of the coal in the two states, burned under the same circumstances, and is exclusive of the cost in fuel of pulverizing the coal and of blowing the dust into the furnace. A correct commercial comparison must include this cost, which is only incurred when the coal is used in the pulverized state, because when it is used in the lump state it can be burned as rapidly with the natural draught as the pulverized coal can be with the artificial

draught obtained by the fan-blowers. The reason why the pulverized coal cannot be consumed at a greater rate with the fan-blowers than the lump-coal can be consumed with the average draught given by the boiler-chimney is, that the former requires a certain time for ignition and combustion, which is much longer than the latter requires, because the temperature to which the former is exposed above the bed of incandescent fuel on the grate-bars is much less than the temperature of that bed to which the latter is exposed.

The cost of the net horse-power in average practice may be taken at about 4 pounds of coal per hour. Now, the mean of experiments C and D gave $\left(\frac{1.374 + 1.388}{2} =\right)$ 1.381 net horse-power developed by the engine in pulverizing the coal and in blowing the dust into the furnace, and in pumping the feed-water into the tank, which, at 4 pounds of coal per hour per horse-power, is 5,524 pounds of coal per hour, or, as the coal consumed per hour was 66 pounds, $\left(\frac{5.524 \times 100}{66} =\right)$ 8.37 per centum of the total weight of coal burned. Consequently, the pulverized coal was commercially 8.37 per centum inferior to the lump-coal.

In experiment A, during which lump-coal was burned alone, there was required to drive the fan-blowers and to pump the feed-water 0.500 net horse-power, which, at 4 pounds of coal per hour per horse-power, required 2.000 pounds of coal per hour to produce it, and, as the hourly consumption of coal during that experiment was 66 pounds, there were consumed in producing the artificial draught and in pumping the feed-water $\left(\frac{2.000 \times 100}{66} =\right)$ 3.06 per centum of the total weight of coal burned. Deducting this 3.06 per centum from the 8.37 per centum found in the immediately preceding paragraph, there remains 5.31 per centum of the total weight of coal consumed applied to the pulverization of the coal alone.

It must be distinctly understood that the results of these experiments are only for semi-bituminous coal, and that no inferences drawn from them are warranted as regards other kinds of coal. The experiments were unfortunately terminated before trials of other kinds of coal could be made, but they were afterward resumed with another boiler, and extended to include anthracite as well as semi-bituminous coal. The results of these later experiments have been given in a preceding paper.

The total weight of semi-bituminous coal consumed during these experiments was 15,279 pounds, of which 1,429 pounds, or 9.35 per centum, was refuse of ash, clinker, and soot.

As the pound of the combustible portion of the semi-bituminous coal vaporized under the same conditions the same weight of water whether the coal was burned in the lump state alone, or partly in the lump and partly in the pulverized state, the mean results of the four experiments may be taken to give the performance of the boiler with semi-bituminous coal. These means are as follows:

Number of pounds of coal consumed per hour	79.578
Number of pounds of combustible consumed per hour	72.135
Number of pounds of coal consumed per hour per square foot of grate-surface	15.080
Number of pounds of combustible consumed per hour per square foot of grate-surface	13.670
Number of pounds of coal consumed per hour per square foot of heating-surface	0.177
Number of pounds of combustible consumed per hour per square foot of heating-surface	0.160
Per centum of the coal in refuse of ash, clinker, and soot	9.35
Temperature, in degrees Fahrenheit, of the gases of combustion in the boiler-uptake	408.
Pounds of water vaporized under the atmospheric pressure and from the temperature of 100 degrees Fahrenheit by 1 pound of coal	8.592
Pounds of water vaporized under the atmospheric pressure and from the temperature of 100 degrees Fahrenheit by 1 pound of combustible	9.478
Pounds of water vaporized under the atmospheric pressure and from the temperature of 212 degrees Fahrenheit by 1 pound of coal	9.596
Pounds of water vaporized under the atmospheric pressure and from the temperature of 212 degrees Fahrenheit by 1 pound of combustible	10.586
Ratio of the water-heating (mean) to the grate-surface	85.222 to 1.000
Ratio of the grate-surface to the cross-area through the tubes, for draught	3.112 to 1.000

Very respectfully, your obedient servant,

B. F. ISHERWOOD,
Chief Engineer, U. S. N.

SEPTEMBER 10, 1875.

To Engineer-in-Chief WM. W. W. WOOD,
U. S. Navy, Chief of the Bureau of Steam-Engineering, Navy Department.

B.

NEW YORK NAVY-YARD, *December* 14, 1874.

SIR: In accordance with your order of the 4th ultimo, we have made a careful experimental examination of the propeller applied by Mr. N. A. Patterson, of Tennessee, to the tug-boat Rocket, attached to the New York navy-yard, with the view of ascertaining its propelling efficiency relatively to that of the regular screw with which the Rocket was originally fitted.

As we are required by your order to set forth the economy of Mr. Patterson's propeller relatively to that of the regular screw, the ratios of their slips with equal power expended, and our opinion whether or not Mr. Patterson's propeller should be adopted for screw-propulsion in preference to the screws heretofore used, together with our reasons therefor, we have the honor to state that our results, experimental and inferential, will be found embodied in the following

REPORT.

Before detailing the experiments with the competitive regular and Patterson screw propellers, it is proper to give a description of the vessel and machinery with which they were made, in order that it may be understood whether the experimental conditions, as regard magnitude and appropriateness, were such that their results can be accepted for general application.

HULL.

The tug-boat Rocket, with which the competitive experiments with the regular screw and with the Patterson screw were made, has an exceedingly sharp yacht-model, with great dead-rise at the amidship cross-section. The keel is very much deeper at the stern-post than at the stem, having been carried down to give the screw as much diameter as practicable. The hull is of wood, coppered, and without spars, and has the following dimensions:

Extreme length over all	98 feet.
Length on the water-line, from the forward edge of the rabbet of the stem to the after-side of the stern-post	84 feet 8 inches.
Extreme breadth on the water-line	18 feet 9 inches.
Draught of water from the bottom of the keel:	
Forward	5 feet 3 inches.
Mean	7 feet 3 inches.
Aft	9 feet 3 inches.
Depth of keel amidship, below the lower edge of the rabbet	8 inches.
Greatest immersed transverse section	104.3 square feet.
Displacement	155.6 tons.
Ratio of the greatest immersed transverse section to its circumscribing parallelogram	0.845 to 1.000
Ratio of the displacement to its circumscribing parallelopipedon	0.520 to 1.000
Ratio of the length to the breadth, on the water-line	4.516 to 1.000

ENGINE.

There is one non-condensing vertical direct-acting engine, with the axis of its cylinder perpendicular above the axis of the screw-shaft. The cylinder, has but one valve, which is a three-ported slide equilibrated on the back by Adams's arrangement, and worked by the Stephenson link, with two eccentrics. This valve cuts off the steam at 0.841 of the stroke of the piston from the commencement, by lap on the steam side, and commences to cushion, or compress the steam in the cylinder, by exhaust-lap when the piston is at 0.15 of its stroke from the end. The feed-pump and bilge-pump are worked from the main cross-head, which moves between vertical guides. The sides of the cylinder are felted and lagged, but its ends and the valve-chest are uncovered. The steam-pipe is felted. The cylinder is placed above the spar-deck, in an engine-house of light joinery, well ventilated. Fresh feed-water is used, carried in a tank, and, before being pumped into the boiler, has its temperature raised by the exhaust-steam, in a heater. The following are the principal dimensions of the engine:

Number of cylinders	1
Diameter of the cylinder	25⅛ inches.
Diameter of the piston-rod	3⅜ inches.
Stroke of the piston	24⅞ inches.
Net area of the piston, after deducting area of piston-rod	491.323 square inches.
Space-displacement of the piston, per stroke	7 0727 cubic feet.
Space in clearance and steam-passage at one end of the cylinder	0.3273 cubic foot.
Area of the steam-port	31.5 square inches.
Diameter of crank-pin journal	5¾ inches.
Length of crank-pin journal	6 inches.

BOILER.

There is one boiler forward of the engine, and it is of the lower-flue and upper-return horizontal tube type, with large steam-drums, and considerable superheating surface. The shell and its drums are thoroughly covered with felt, and the draught is forced by exhausting the steam into the chimney.

The front portion of the shell contains the furnaces, uptake, and nearly half the length of the tubes; it is rectangular in plan and semi-cylindrical on top; 7 feet 3½ inches wide, 7 feet 9½ inches long, and 8 feet 3 inches high. The back portion of the shell is a flat-ended cylinder 7 feet 3½ inches in diameter, and 7 feet ½ inch in length; its top is a horizontal extension of the semi-cylindrical part of the front portion. The total length of the boiler is 14 feet 10 inches.

There are two furnaces with vertical sides and elliptical crowns. Each furnace is 3 feet wide and 7 feet long in the clear, of which length the grates occupy 5 feet 9 inches, the remainder being occupied by a cast-iron bridge-wall, with ends perforated by small holes for the admission and distribution of air to the hot gases of the fuel. The crown of the furnace at the front is 3 feet 4 inches above the level of the grate, and at the back 3 feet 7 inches. The opening for the furnace-door is 16 inches square, and the door is perforated with small holes for the admission and distribution of air to the hot gases of the fuel. The flat water-spaces at the front and back of the furnaces are 4¾ inches wide, including thicknesses of metal; and the flat water-space between the furnaces is 6 inches wide, including thicknesses of metal. The ash-pit is a cast-iron pan placed beneath the front portion of the shell and kept filled with water.

From each furnace there extend to the back smoke-connection three lower horizontal flues of 5 feet 2 inches length. One is 9 inches in internal diameter, one 15 inches, and one 20 inches. The least water-space between the flues is 3 inches.

The back smoke-connection is in common for both furnaces. Its top is flat, and its bottom and sides are concentric with the circular shell, and 3½ inches distant, including thicknesses of metal. The length of the connection, lengthwise the boiler, is 22½ inches in the clear. The thickness of the flat water-space between the back of the connection and the end of the shell is 4¾ inches, including thicknesses of metal. A circular manhole of 16 inches diameter in the end of the shell, gives admission to the connection for cleaning and repairs.

From the back smoke-connection to the uptake there extend three rows of horizontal iron tubes. The two lower rows contain 13 tubes each, and the upper row 11 tubes, making 37 tubes in all. The extreme length of all the tubes is 10 feet. Those of the lower row are 4¼ inches outside diameter; those of the upper row are 4 inches outside diameter; and of those of the center row four are 4 inches diameter and nine are 4¼ inches outside diameter. All the tubes are expanded in their plates.

The uptake is rectangular in form, having a flat top and bottom, while the sides are concentric with the circular shell. It is 30⅝ inches long in the clear, lengthwise the boiler, 18 inches high, and is in common for all the tubes. Its entire front is occupied by a hinged door, for sweeping the tubes.

The chimney rises vertically from the center of the top of the uptake. It is 26 inches in inner diameter, and 27 feet in height above the level of the grates.

Above the top of the shell and surrounding the chimney is a cylindrical steam-superheater, 3 feet in outside height and 3 feet 9 inches in outside diameter. The distance from the top of the shell to the bottom of the superheater is 1 foot.

Upon the top of the shell and at the center of its length is a cylindrical steam-drum of 4 feet outside diameter and 4 feet height above the top of the shell.

The following are the principal dimensions and proportions of the boiler:

Extreme length of the boiler	14 feet 10 inches.
Extreme breadth of the boiler	7 feet 3½ inches.
Extreme height of the boiler, exclusive of steam-drum and ash-pan	8 feet 3 inches.
Extreme height of the boiler, inclusive of steam-drum and ash-pan	13 feet.
Number of furnaces	2
Width of furnace	3 feet.
Length of grate-surface	5 feet 9 inches.
Aggregate area of grate-surface	34.5 square feet.
Number of lower flues	6
Length of lower flues	5 feet 2 inches.
Number of tubes	37
Length of tubes	10 feet.
Outside diameter of tubes	4 and 4¼ inches.
Diameter of chimney	2 feet 2 inches.
Height of chimney above level of grates	27 feet.
Steam-room in boiler-shell	85.5 cubic feet.

Steam-room in superheater	19.0 cubic feet.
Steam-room in steam-drum	50.5 cubic feet.
Total steam-room	155.0 cubic feet.
Cross-area of the lower flues	7.701 square feet.
Cross-area of the tubes	2.333 square feet.
Cross-area of the chimney	4.700 square feet.
Heating-surface in the furnaces	164.000 square feet.
Heating-surface in the lower flues	119.000 square feet.
Heating-surface in the back smoke-connection	63.000 square feet.
Heating-surface in the tubes	280.772 square feet.
Heating-surface in the uptake	46.228 square feet.
Aggregate water-heating surface	673.000 square feet.
Steam-superheating surface in the boiler-shell and in the superheater	28.000 square feet.
Ratio of the water-heating to the grate surface	19.507 to 1.000.
Ratio of the steam-superheating to the grate surface	0.811 to 1.000.
Ratio of the grate-surface to the cross-area of the flues	4.480 to 1.000.
Ratio of the grate-surface to the cross-area of the tubes	14.788 to 1.000.
Ratio of the grate-surface to the cross-area of the chimney	7.340 to 1.000.

REGULAR SCREW.

The regular screw is of cast iron, and has a uniform pitch. The edges of its blades, when viewed in projection on a plane parallel with the axis, are parallel to each other, and are at right angles to the axis. The thickness of the blade just above the fillet joining it to the hub is 4 inches.

Diameter of the screw	7 feet 3 inches.
Diameter of the hub	1 foot 3 inches.
Number of blades	4.
Pitch of the screw	14 feet.
Length of the screw in the direction of the axis	2 feet.
Fraction used of the pitch	$\frac{1}{4}$
Helicoidal area of the screw	32.332 square feet
Projected area of the screw on a plane at right angles to the axis	22.890 square feet

PATTERSON SCREW.

The screw, which for distinction will be designated the Patterson screw, is of cast iron, and has the same diameter, and the same diameter of hub, as the competitive regular screw above described; but its generatrix, instead of being a straight line, as in the case of that screw, is straight for only $2\frac{1}{4}$ feet of its total length of $3\frac{5}{8}$ feet, (the radius of the screw,) the remaining length of $1\frac{1}{8}$ foot, or 31 per centum, having so rapid a curvature that the outer end of the generatrix, that is, the end at the periphery of the screw, rises 7 inches above the straight part, which gives a concave surface to the outer $1\frac{1}{4}$ foot, measured radially, of the propelling surface of the blade. The forward edge of the blade is perpendicular to the axis, and the propelling-surface of the blade for a length of 24 inches, measured in the direction of the axis, has a uniform pitch of 14 feet. From this point the pitch expands gradually, but very rapidly, to the after edge of the blade, a distance of 8 inches, measured in the direction of the axis; the mean pitch of this 8-inches-long part being 24 feet, makes the mean pitch of the entire screw in function of surface $16\frac{1}{4}$ feet. The propelling-surface at the after outer angle of the blade being formed by the mitering of the curved part of the generatrix and the curved part of the directrix, has a dishing or spoon form. The after edge of the blade for $1\frac{1}{4}$ foot from the periphery of the screw is parallel with the forward edge, and is perpendicular to the axis; from this point it tapers forward and joins the hub at the same point as the regular screw.

From this description it will be seen that the Patterson screw is exactly the same as the regular competitive screw for two-thirds of its length, with 31 per centum of its generatrix from the outer extremity curved up 7 inches, and having the remaining one-third of its length made with a rapidly-increasing pitch, the mitering of the two curves at the outer after angle of the blade giving the propelling-surface there a spoon-like concave form.

The thickness of the blade just above the fillet joining it to the hub is 4 inches. The weight of the screw is 3,338 pounds.

The following are the principal dimensions:

Diameter of the screw	7 feet 3 inches
Diameter of the hub	1 foot 3 inches
Number of blades	4.
Mean pitch of the screw	16 feet 6 inches
Length of the screw in the direction of the axis on the hub	2 feet.

Length of the screw in the direction of the axis at the radius of 22½ inches	2 feet 8 inches.
Length of the screw in the direction of the axis at the periphery	2 feet 8 inches.
Fraction used of the mean pitch in function of surface	⅘ths.
Helicoidal area of the screw	39.654 sq. feet.
Projected area of the screw on a plane at right angles to the axis	26.931 sq. feet.

MANNER OF MAKING THE COMPETITIVE TRIALS.

During the competitive trials made with the two screws above described, the vessel was kept at the same draught of water, was run over the same bases the same number of times, and the same method of observation was employed.

Two bases were used, one on the right and the other on the left bank of the Hudson River, both being perfectly straight and a few miles above New York City. The first had its lower extremity at Pleasant Valley Dock, about half a mile below Fort Lee, and its upper extremity at Englewood Dock; its length, carefully measured on the large Coast-Survey chart, is 17,914 feet. The last had its lower extremity at the dock on the northern bank of the Spuyten Duyvil Creek, and its upper extremity at the large dock of the southern suburb of the city of Yonkers; its length, carefully measured on the large Coast-Survey chart, is 18,850 feet. Six runs were made over each base, three in one direction and three in the other, making in the aggregate twelve runs, six in each direction.

During these runs the steam-pressure in the boiler and the position of the throttle-valve were kept uniform, and the vessel's course a straight line. The indicator-diagrams were taken as rapidly as possible by an expert assistant, so as to make them nearly continuous, and they averaged one per minute. The gross effective indicated pressure given in the following table, containing the results of the competitive trials, is the mean of all the diagrams taken in the respective cases. The time was accurately noted by two observers when the vessel passed the ranging-marks at each end of the base, while a third observer took the number on the counter. After passing the ranges the vessel was kept under the same conditions during her turnings, and sufficient space was taken to bring her up to the first marks at her regular speed. The trials at the first base were made in August, 1874, and at the last base in the November following.

At the first base there was first made the trial of the regular screw, that being already attached to the vessel. The bottom of the latter was somewhat foul, as she had not been docked for some time, and this operated, in the comparison, against the regular screw, as when the vessel was docked to put on the Patterson screw the bottom was cleaned. But at the last base there was first made the trial of the Patterson screw, the bottom of the vessel being somewhat foul by the intervening three months' exposure. After that trial the vessel was docked to put on the regular screw, and the bottom was cleaned at the same time. By taking the mean, therefore, of the trials at both bases, the effect of the fouling of the vessel's bottom is equalized for both screws.

The vessel's speed, uninfluenced by wind or current, was obtained as follows: The speed in geographical miles of 6,086 feet per hour was calculated by the time and distance for each single run without regard to the tide; then the mean of the means of every consecutive two runs was accepted for the true speed during the trial in water still and smooth. In the comparison of the economic results from the two screws the cube of this speed is taken as the measure of the effect produced by the net power developed by the engine in the respective cases.

The net power is taken as the measure of the cost of the effect produced, and not the gross effective power; the net power being the remainder of the gross effective indicated power after deduction of the power required to work the engine, *per se*, and the propriety of employing it for the purpose of the comparison becomes evident when the fact is considered that the friction or resistance to motion of the engine, *per se*, must be overcome before any power can be applied to the screw. The net power is identical with the dynamometrical power, and was calculated for each run, the mean being taken for the true net horses-power developed by the engine when the vessel was propelled at the speed as above determined.

The force and direction of the wind and the state of the water was the same in both competitive trials, and their results may be briefly summarized by stating that the regular screw had a slip of 16.64 per centum and an economic propelling efficiency represented by $\left(\frac{8.8404^3}{154.4692}=\right)4.472743$, while the Patterson screw had a slip of 24.69 per centum and an economicpropelling efficiency represented by $\left(\frac{8.6430^3}{160.1609}=\right)4.032736$; and, as the numbers 4.472743 and 4.032736 compare as 1.0000 to 0.9017, the Patterson screw was 10⅛ per centum less efficient than the regular screw.

Table containing the results of the competitive trials in the Hudson River of the United States tug-boat Rocket with the regular screw-propeller and with the propeller furnished by Mr. N. A. Patterson.

	Regular screw, 14 feet pitch.	Patterson screw, 14[illegible] feet mean pitch.
Vessel's draught of water, in feet and inches, forward	5 3	5 3
Vessel's draught of water, in feet and inches, mean	7 3	7 3
Vessel's draught of water, in feet and inches, aft	9 3	9 3
Kind of breeze	Gentle	Gentle.
Direction of breeze	Abeam	Abeam.
State of the water	Smooth	Smooth.
Mean gross effective pressure on piston, in pounds per square inch	34.57	38.35
Mean net pressure on the piston, in pounds per square inch	32.57	36.35
Mean number of double strokes of piston made per minute	76.8350	71.3538
Gross effective horses-power developed by the engine	163.9545	168.9088
Net horses-power developed by the engine	154.4692	160.1009
Speed of the vessel per hour in geographical miles of 6,086 feet	8.8404	8.6038
Slip of the screw in per centum of its speed	16.64	24.0[illegible]
Relative economic efficiency of the screws	1.0000	0.9[illegible]

DISTRIBUTION OF THE POWER.

The distribution of the power with the two screws during the preceding competitive trials has been calculated by allowing, first, for the pressure required to work the engine, *per se*, 2 pounds per square inch of piston, and deducting the horses-power due to this pressure from the gross effective indicated horsse-power developed by the engine. the remainder is the net horses-power applied to the screw-shaft. Then, from this latter power is deducted the horses-power absorbed by the friction of the load, calculated from Morin's co-efficient of 7½ per centum; and also the horses-power expended in overcoming the cohesive resistance of the water by the screw-blades, calculated for the value of 0.45 pound per square foot of helicoidal surface moving in its helical path with the velocity of 10 feet per second. The remainder is the horses-power expended in the slip of the screw and in the propulsion of the hull, and is divided between them in the proportion of the slip to unity minus the slip.

	Regular screw.		Patterson screw.	
	Horses-power	*Per cent.*	*Horses-power*	*Per cent.*
Gross effective horses-power developed by the engine	163.9545	.....	168.8088	.....
Power required to work the engine *per se*	9.4853	.....	8.8088	.....
Net power applied to the screw-shaft	154.4692	100.00	160.1009	100.0
Power absorbed by the friction of the load	11.5852	7.50	12.0076	7.50
Power expended in overcoming the resistance of the water by the screw-blades	11.4000	7.38	12.0759	7.54
Power expended in the slip of the screw	21.8789	14.16	33.5827	21.0
Power expended in the propulsion of the vessel	109.6051	70.96	102.4347	63.9
Totals	154.4692	100.00	160.1009	100.0

THRUST OF THE SCREWS.

The thrust of the two screws during the competitive trials can be easily calculated from the above "distribution of the power" in the following manner, namely: The horses-power expended in the propulsion of the vessel, being converted into foot-pounds by its multiplication by 33,000, and then divided by the speed of the vessel in feet per minute, gives the thrust of the screw in pounds.

These calculations having been made, show the thrust of the regular screw to have been 4,033.59 pounds, and that of the Patterson screw 3,855.81 pounds.

Comparative resistances of the regular screw and of the Patterson screw when going ahead and when backing, with the vessel stationary at the wharf.

Experiments on the resistances of the screws when going ahead and when backing were made with the vessel secured to the navy-yard wharf, the influence of the tide being inappreciable.

The engine was first operated ahead until in uniform action, when twenty indicator diagrams were taken as rapidly as possible, the number of revolutions made by the screw during the time of taking the diagrams being ascertained from the counter. The engine was then reversed and the same process repeated. About sixteen minutes were occupied in each case, and the results were as follows:

FOR THE REGULAR SCREW.

In going ahead with the regular screw, 56.4375 revolutions were made per minute, with a gross effective indicated pressure of 43.57 pounds per square inch of piston, or a net pressure of 41.57 pounds; and in backing 61.0625 revolutions were made, with a gross effective indicated pressure of 44.54 pounds per square inch of piston, or a net pressure of 42.54 pounds. As the revolutions of the screw are as the square roots of the net pressures on the piston, if this pressure in going ahead had been the same as in backing, the revolutions in going ahead would have been 57.0922 per minute. Consequently, with equal net pressures upon the piston, the regular screw made $\left(\frac{61.0625}{57.0922}=\right)$ 6.95 per centum more revolutions when backing than when going ahead.

FOR THE PATTERSON SCREW.

In going ahead, with the Patterson screw, 61.7000 revolutions were made per minute, with a gross effective indicated pressure of 44.29 pounds per square inch of piston, or a net pressure of 42.29 pounds; and in backing 67.6160 revolutions were made, with a gross effective indicated pressure of 44.38 pounds per square inch of piston, or a net pressure of 42.38 pounds. The net pressures in these cases being almost exactly the same, the Patterson screw made $\left(\frac{67.6160}{61.7000}=\right)$ 9.59 per centum more revolutions when backing than when going ahead with equal net pressures.

The regular screw was, therefore, much more efficient in backing than the Patterson screw.

Relation between the net pressures on the piston required to give the screw the same number of revolutions per minute when the vessel is held stationary to the wharf and when it is freely under way.

The preceding data enable a determination to be made, for each screw, of the relation between the net pressures on the piston required to give the screw the same number of revolutions per minute when the vessel is held stationary to the wharf and when freely under way. And, first,

FOR THE REGULAR SCREW.

When the vessel was stationary at the wharf, the regular screw made in going ahead 56.4375 revolutions per minute with a net pressure on the piston of 41.57 pounds per square inch, and when steaming freely, having the same immersion, it made 76.8350 revolutions per minute, with the net pressure of 32.57 pounds per square inch of piston. Now, as the net pressures are, *ceteris paribus*, as the squares of the number of revolutions made in a given time by the screw, this pressure for 56.4375 revolutions per minute would be $(76.8350^2 : 32.57 :: 56.4375^2 :)$ 17.57 pounds per square inch of piston. Hence it appears that, revolution for revolution, there were required when the vessel was stationary at the wharf $\left(\frac{41.57}{17.57}=\right)$ 136.60 per centum more pressure to turn the regular screw than when the vessel was freely under way.

Again, as the number of revolutions made by the screw per minute is, *ceteris paribus*, as the square roots of the net pressures on the piston, the 76.8350 revolutions made with the net pressure of 32.57 pounds per square inch when the vessel was freely under way, would become, with the net pressure of 41.57 pounds per square inch $(\sqrt{32.57} : 76.8350 :: \sqrt{41.57} :)$ 86.8041 revolutions per minute; and, as this net pressure of 41.57 pounds gave the screw 56.4375 revolutions per minute when the vessel was stationary at the wharf, it follows that with equal net pressures on the piston the regular screw will make $\left(\frac{86.8041}{56.4375}=\right)$ 53.81 per centum more revolutions in the same time when the vessel is steaming freely than when it is held stationary at the wharf.

FOR THE PATTERSON SCREW.

When the vessel was stationary at the wharf the Patterson screw made, in going ahead, 61.7000 revolutions per minute with a net pressure on the piston of 42.29 pounds

per square inch, and when steaming freely, having the same immersion, it made 71.3550 revolutions per minute with the net pressure of 36.35 pounds per square inch of piston. Now, as the net pressures are, *ceteris paribus*, as the squares of the number of revolutions made in a given time by the screw, this pressure for 61.7000 revolutions per minute would be ($71.3550^2 : 36.35 :: 61.7000^2 :$) 27.18 pounds per square inch of piston. Hence it appears that, revolution for revolution, there were required when the vessel was stationary at the wharf $\left(\frac{36.35}{27.18}=\right)$ 33.74 per centum more pressure to turn the Patterson screw than when the vessel was freely under way.

Again, as the number of revolutions made by the screw per minute is, *ceteris paribus*, as the square roots of the net pressures on the piston, the 71.3550 revolutions made with the net pressure of 36.35 pounds per square inch when the vessel was freely under way, would become with the net pressure of 42.29 pounds per square inch ($\sqrt{36.35} : 71.3550 :: \sqrt{42.29} :$) 76.9646 revolutions per minute; and, as this net pressure of 42.29 pounds gave the screw 61.7000 revolutions when the vessel was stationary at the wharf, it follows that, with equal net pressures on the piston, the Patterson screw will make $\left(\frac{76.9640}{61.7000}=\right)$ 24.74 per centum more revolutions in the same time when the vessel is steaming freely than when it is held stationary at the wharf.

Performance of the machinery of the United States tug-boat Rocket, in smooth water, with the regular screw.

Advantage was taken of the opportunity afforded by the preceding experiments to ascertain the performance of the machinery of the Rocket with the regular screw, and burning anthracite in the furnaces.

For this purpose the vessel was run during seven consecutive hours with an unchanged throttle-valve and uniform steam-pressure in the boiler; the anthracite consumed and the refuse from it being carefully weighed. Indicator-diagrams were taken at intervals of about two minutes, and from the average of all of them the cylinder-pressures are ascertained. The speed of the vessel is computed from the number of revolutions made by the screw per minute, its pitch of 14 feet, and its slip of 16.64 per centum, as determined by its trials over the measured base.

The throttle-valve was kept considerably closed, so as to preclude any possibility of foaming or priming in the boiler. The anthracite was of average quality, and in the condition it was delivered by the contractor. The blast in the chimney was constantly used, and regulated from time to time so as to maintain the steam-pressure with almost perfect uniformity. There was no heating of journals or any other derangement of the machinery.

The revolutions made by the screw were registered by a counter. The feed-water was fresh and carried in a tank, whence it passed to a heater where its temperature was raised to 130 degrees Fahrenheit by the exhaust steam before it was pumped into the boiler.

VESSEL.	
Vessel's draught of water, in feet and inches: forward	[illegible]
Vessel's draught of water, in feet and inches: mean	[illegible]
Vessel's draught of water, in feet and inches: aft	[illegible]
Area of the vessel's greatest immersed transverse section, in square feet	[illegible]
Displacement of the vessel, in tons	[illegible]
ENGINE.	
Number of double strokes of engine's piston made per minute	[illegible]
Steam-pressure in boiler, in pounds per square inch, above the atmosphere	[illegible]
Throttle-valve	Much closed
Fraction of the stroke of the piston completed when the steam was cut off	[illegible]
Height of the barometer, in inches of mercury	[illegible]
TEMPERATURE.	
Temperature, in degrees Fahrenheit, of the atmosphere	[illegible]
Temperature, in degrees Fahrenheit, of the river-water	[illegible]
Temperature, in degrees Fahrenheit, of the feed-water	[illegible]
COMBUSTIBLE.	
Pounds of anthracite consumed per hour	[illegible]
Pounds of refuse per hour from the anthracite	[illegible]
Pounds of combustible consumed per hour	[illegible]
Per centum of the anthracite in refuse	[illegible]
Pounds of anthracite consumed per hour per square foot of grate-surface	[illegible]
Pounds of anthracite consumed per hour per square foot of heating-surface	[illegible]
Pounds of combustible consumed per hour per square foot of grate-surface	[illegible]
Pounds of combustible consumed per hour per square foot of heating-surface	[illegible]

SPEED.	
Speed of the vessel per hour in geographical miles of 6,086 feet	8.514
Slip of the screw in per centum of its speed	16.64
STEAM-PRESSURES IN CYLINDER, PER INDICATOR.	
In pounds per square inch above zero at commencement of stroke of piston	64.82
In pounds per square inch above zero at point of cutting off the steam	51.00
In pounds per square inch above zero at end of stroke of piston	42.00
In pounds per square inch above zero against the piston during its stroke	21.75
Mean gross effective pressure on piston, in pounds, per square inch	32.25
Mean total pressure on piston, in pounds, per square inch	54.00
Mean net pressure on piston, in pounds, per square inch	30.25
POWER.	
Absolute:	
Gross effective horses-power developed by the engine	147.308
Total horses-power developed by the engine	246.655
Net horses-power developed by the engine	138.173
Economic:	
Pounds of anthracite consumed per hour per gross effective horse-power	8.621
Pounds of anthracite consumed per hour per total horse-power	5.149
Pounds of anthracite consumed per hour per net horse-power	9.191
Pounds of combustible consumed per hour per gross effective horse-power	7.155
Pounds of combustible consumed per hour per total horse-power	4.273
Pounds of combustible consumed per hour per net horse-power	7.623
CONDENSATION.	
Pounds of steam discharged per hour from the cylinder into the atmosphere, calculated from the pressure of the steam at the end of the stroke of the piston	6838.858
Pounds of steam condensed per hour in boiler and cylinder to furnish the heat transmuted into the total power developed by the engine	704.672
Sum of the above two quantities	7543.530

CONCLUSIONS.

As the foregoing experiments were made for the purpose of ascertaining whether a certain propeller, supposed to be the subject of a valid patent, had sufficient superiority over the regular screw in use in the Navy to warrant its adoption in place of the latter, the necessity arises to investigate the nature of the alleged patent, and to determine whether it was valid, and if so, whether it was or was not embodied in the propeller furnished by the patentee and experimented with. For, if the patent be not valid, (and the mere granting of it by the Patent-Office is no proof of validity,) or if it be not embodied in the propeller actually experimented with, then, whatever merit the latter may possess, its use is free to all, and the Navy Department may employ it at discretion, without payment of royalty or fee.

Two patents have been issued to Mr. N. A. Patterson, of Tennessee, for improvements in screw-propellers. The first, numbered 135,149, and dated January 21, 1873, is for a conoidal blade with a circular periphery and a small, pointed teat-like extension, the blade being placed at an angle with the shaft to which it is connected by a radial arm. It is simply a dish or saucer, with a small piece of the rim broken out, placed at an angle with the shaft and attached radially to the same by an arm. As the propeller furnished by the patentee and applied to the Rocket had not a single feature in common with this, any further consideration of the first patent is unnecessary.

The second patent, which is numbered 142,269, and dated August 26, 1873, is, as described therein, for a "helicoidal propeller-blade having a concave face with a curvature of equal or nearly equal radius in each direction from a point at or near the forward or cutting edge." And again, for "a concavo-convex propeller-blade, a portion of whose concave surface has a curvature of equal or nearly equal radius in an inward, outward, and rearward direction from a point at or near the forward or cutting edge." These two citations are the *claims* allowed by the Patent-Office, and constitute the entire patent. A propelling surface constructed in accordance with them would not be helicoidal, as stated in the patent, but conoidal, the apex of the conoid being the "point at or near the forward or cutting edge" of the blade. It would form a propeller whose pitch would be different at every point of the blade, both radially and in the direction of the axis, and whose generatrix would be curved with a different curvature at every point of the blade. This is the sole novel feature of Mr. Patterson's propeller, and the only one patented by him, namely, that the surface of the blade is a segment of a conoid whose apex is at or near the forward edge of the blade, making,

in fact, each blade half a conoid. The only difference from his previous patent is in the location of the apex of the conoid at the forward edge of the blade instead of at its center, and in the outline given to the blade, which is not restricted to a circle as before.

Now, the screw furnished by Mr. Patterson and applied to the Rocket was not made in accordance with either of his patents. On the contrary, he has no patent for it, or for any part of it; nor does it contain a single feature not previously well known and largely employed. It is simply a helicoid, the outer 31 per centum of the length of whose generatrix is curved, the remaining 69 per centum being straight; and the after 25 per centum of the length of whose directrix is curved, the remaining 75 per centum being straight. These features of a generatrix and a directrix curved, in whole or in part, date from the earliest adaptations of the helicoid as a submerged propeller; and they have neither superiority nor inferiority over the straight generatrix and directrix of the regular screw—that is to say, provided the diameter, number of blades, length, and mean pitch of helicoids be the same, they will give identical propelling results, whether their generatrices and directrices be straight or curved. This is a result which, though of abundant experimental demonstration, might have been easily inferred when it is understood that water is displaced vertically by the screw, and not horizontally, a misconception of which fact has been the fruitful parent of many devices for remedying a purely imaginary defect by the application of a physical property of water having no existence in nature.

Under the actual conditions of the experiments, and with the proportions possessed by the two competitive screws, the so-called Patterson screw gave, as has been shown, an economic propelling efficiency 10⅛ per centum less than that of the regular screw. This inferiority is due solely to its greater slip, and its greater slip is due solely to its greater mean pitch. Had the mean pitch and the length of the Patterson screw been the same as that of its competing regular screw, the economic propelling effects would have been the same. Even the regular screw might have had its economic propelling efficiency increased considerably by lessening both its pitch and its length; the diameter being limited by the dimensions of the vessel, and, therefore, not admitting of increase. The backing efficiency of the Patterson screw, relatively to its propelling efficiency, is much less than the backing efficiency of the regular screw, relatively to its propelling efficiency.

In conclusion, we reply categorically to the questions of your order of the 4th ultimo, as follows, namely:

1st. The economy of Mr. Patterson's propeller, relatively to that of the regular screw, is 10⅛ per centum less, the economic efficiency of the regular screw being taken for unity. In backing, the efficiency of Mr. Patterson's screw is greatly less than that of the regular screw.

2d. The slip of the regular screw is 16.64 per centum; that of Mr. Patterson's screw is 24.69 per centum.

3d. We are of opinion that Mr. Patterson's propeller should not be adopted for screw propulsion in preference to the screws heretofore used.

4th. The reasons for the above opinions, experimental and inferential, are contained in the data of the competitive trials and in the calculated results therefrom, given in extenso in the body of this report.

All of which is respectfully submitted by, sir, your obedient servants,

B. F. ISHERWOOD,
GEO. SEWELL.
ROBERT DANBY,
Chief Engineers, United States Navy.

Vice-Admiral S. C. ROWAN, U. S. N.,
Commanding New York Navy-Yard and Station.

No. 10.—BUREAU OF CONSTRUCTION AND REPAIR.

NAVY DEPARTMENT,
BUREAU OF CONSTRUCTION AND REPAIR,
November 15, 1876.

SIR: In compliance with your instructions, I have the honor to forward herewith a report of the transactions coming under the cognizance of the Bureau of Construction and Repair during the past year, together with the estimates for appropriations required for the fiscal year ending the 30th day of June, 1878.

Estimate A is for the pay of employés attached to this bureau, as authorized by acts of Congress.

Estimate B is for the necessary preservation of vessels on the stocks and in ordinary; purchase of materials and stores of all kinds; labor in navy-yards and on foreign stations; preservation of materials; purchase and repair of tools; wear, tear, and repair of vessels afloat, and general maintenance of the Navy; incidental expenses, advertising, and foreign postages; and for completing and making entirely ready for sea the five (5) double-turreted iron-clads, already in hand, and in process of complete repair.

The appropriation for the protection of live-oak timber, asked for in the estimates for the fiscal year ending the 30th day of June, 1877, was not made by Congress, consequently the timber-agents were discharged when the appropriation made for that purpose was exhausted. Under the impression that Congress does not deem it necessary to employ agents to look after and take care of the live-oak timber belonging to the Government, no estimate has been made for that purpose.

Repairs have been made upon the following vessels during the past year, viz:

Enterprise,	Hartford,	Hartford,
Ranger,	Intrepid,	Huron,
Adams,	Mayflower,	Juniata,
Camanche,	Minnesota,	Lehigh,
Wabash,	Phlox,	Marion,
Wachusett,	Powhatan,	Tuscarora,
Alert,	Plymouth,	Tennessee,
Colorado,	Shawmut,	Monocacy,
Amphitrite,	Supply,	Ashuelot,
Miantonomoh,	Swatara,	Saco,
Terror,	Trenton,	Omaha,
Puritan,	Vandalia,	Sea Weed,
Essex,	Antietam,	Ajax,
Monadnock,	Burlington,	Fortune,
Quinnebaug,	Constitution,	Mahopac,
Constitution,	Monongahela,	Manhattan,
Huron,	Montauk,	Ossipee,
Cohasset,	Nantucket,	Rose,
Leyden,	New Hampshire,	Saugus,
Ohio,	Passaic,	Swatara,
Ossipee,	Pinta,	Independence,
Plymouth,	Powhatan,	Lackawanna,
Swatara,	Jean Sands,	Pensacola,
Vandalia,	Despatch,	Portsmouth,
Glance,	Supply,	Benicia,
Mayflower,	Tallapoosa,	Saco,
Quinnebaug,	Wyoming,	Kearsarge,
Ranger,	Adams,	Yantic,
Sea Weed,	Alliance,	Palos,
St. Louis,	Brooklyn,	Michigan,
Alarm,	Canandaigua,	Richmond,
Alert,	Catskill,	Franklin.
Constellation,	Gettysburg,	

Vessels whose names appear more than once have been repaired at different navy-yards.

In submitting the estimates for appropriations, I beg leave to say that they do not cover the cost of thoroughly repairing all of the vessels which have been surveyed and found necessary to repair, but those only whose services are absolutely wanted for cruising purposes in time of peace, and for the completion of repairs to the double-turreted iron-clads.

The reports made by the proper officers after a thorough and careful survey upon vessels requiring repairs show more conclusively than any

reports heretofore made the great cost and loss to the Government arising from the use of unseasoned materials in the building and repair of vessels of war; *e. g.*, the Yantic, repaired in 1870, and completed in 1872, was made equally good as a new vessel in every respect. The materials used in the repairs were only partially seasoned, and after three years and six months' service she was reported so rotten that, if brought to the United States at all, a favorable season must be chosen, or she would not be able, through weakness, to safely make the voyage. The Yantic is only one of a large number of vessels which show the same result, and when compared with the durability of the Franklin and other vessels built of well-seasoned materials, the loss to the Government is surprisingly great. It is a source of gratification to know, in view of the above facts, that there is now on hand a large supply of good materials, which, in a short time, will be in condition to be used in the building or repairing of vessels, and which will warrant their durability and long usefulness.

Of the eight vessels authorized by act of Congress to be built, four have been put in commission and are at sea, and the remainder will be ready as soon as other vessels requiring repairs are put out of commission, from which crews may be obtained. These vessels, which were built by designs from this bureau, upon conditions decided upon by the chiefs of the respective bureaus, and with your approval, have, after a thorough trial at sea, given entire satisfaction, and have exhibited all of the good qualities expected of them. The Trenton, one of the vessels authorized to be built, will soon go into commission, and no doubt will meet the wants of the Navy for vessels of her class. This vessel was designed for a new type of war-vessels which were required for flag-ships. The points desired were good speed, increased fighting-power, handiness, and steady platform. The engines, designed by the Bureau of Steam-Engineering, have been tested, and show the power and compactness contemplated and desired in carrying out the above object. Vessels of this type will be superior in speed, in handiness, in fighting-power, and can be kept in commission at much less expense than vessels of the Franklin class. Taking in view the great advantage to the Government in having such vessels in service, I respectfully recommend the construction of five (5) more of the Trenton class.

Since my last report, the Marion and Vandalia, of the Swatara class, which were remodeled by designs from this bureau, with engines designed by the Bureau of Steam-Engineering, have been put into commission, and have made a passage to Europe. The reports of the performances of these vessels are very strong in praise of their superior qualities, and of being of the proper class for cruising-ships. More of the same class will be much needed ere they can be built, and I earnestly recommend that an appropriation be made for commencing the construction of five (5) vessels of that class.

The iron-clad vessels, of which fourteen (14) have been thoroughly repaired and so changed that, from being incapable of going or keeping to sea during rough weather, and of very imperfect and unreliable arrangements for fighting purposes, have been made perfectly sea-worthy, and of good facilities for working the turrets and guns, and have been furnished with all modern improvements.

The four double turreted iron-clads are under repairs, and the improvements made have changed their wooden into double bottoms and iron hulls; increased their armor-plating from five (5) inches laminated iron to seven (7) inches of solid plate, and thereby their shot-resistance to more than 100 per cent.; their free-board and capacity for carrying fuel

and stores by a large percentage, and their steam-power sufficient to give them a speed of ten (10) knots.

The repairs upon the iron-clad Puritan are well advanced; the improvements made are a change in the form of the hull, by which her capacity has been increased sufficient to lessen her draught of water about five (5) feet, and allow an increase of steam-power to produce a speed of twelve knots; an increase of thickness of armor from seven (7) inches of laminated to twelve (12) inches of solid-plate iron; and increase of free board sufficient to work her guns in any kind of weather, and the attachments of a steam-steering and capstan-apparatus. She is provided with two turrets instead of one, with four (4) 41-ton rifled, instead of two (2) 15-inch smooth-bore, guns of 25 tons. These improvements to the iron-clad vessels of the Navy, made by your directions, give the Government an iron-clad fleet of tenfold more power than it ever had before, and one vessel, at least, in many respects superior to the well-known English iron-clad Devastation. These vessels, when completely repaired, will be quite sufficient to meet all of the wants of the Government for an iron-clad fleet, especially as the time is fast approaching when such vessels for war purposes will be superseded by other more powerful instruments of warfare. The above five iron-clads, composing the heavy armor-plated vessels of the Navy, would be the first wanted in any naval warfare, and are indispensable for the protection of our large cities. Had the estimated amount called for in the last report been appropriated, these vessels would have been completed and made ready for sea by another fall. The importance of having them in readiness for service, and especially in the present aspect of foreign affairs, must be admitted by every intelligent person at all familiar with the subject, and for that purpose I earnestly and respectfully recommend that the sum of one million five hundred and fifty thousand dollars ($1,550,000) of the amount estimated for be appropriated and made available for immediate use in preparing these five (5) iron-clads for service.

I beg leave herewith to inclose a statement showing the condition of all the vessels in the Navy on the 1st of January, 1869, with the particular duties performed by each since that time.

I am, very respectfully, your obedient servant,

I. HANSCOM,
Chief of Bureau.

Hon. GEORGE M. ROBESON,
Secretary of the Navy.

Estimates of appropriations required for the service of the fiscal year ending June 30, 1878, by the Bureau of Construction and Repair.

Detailed objects of expenditure, and explanations.	Estimated amount which will be required for each detailed object of expenditure.	Amount appropriated for the current fiscal year ending June 30, 1877.
A.—SALARIES.		
Chief clerk, per act of August 15, 1876, (Stat. at L., p. 161)	$1,800	
Draughtsman, per act of August 15, 1876, (Stat. at L., p. 161)	1,800	
One clerk of class four, per act of August 15, 1876, (Stat. at L., p. 161)	1,800	
One clerk of class three, per act of August 15, 1876, (Stat. at L., p. 161)	1,600	
One clerk of class two, per act of August 15, 1876, (Stat. at L., p. 161)	1,400	
One messenger, per act of August 15, 1876, (Stat. at L., p. 161)	840	
One laborer, per act of August 15, 1876, (Stat. at L., p. 161)	720	
One clerk of class three, (submitted)	1,600	
One clerk of class two, (submitted)	1,400	
	12,960	$9,960
CONTINGENT.		
Stationery and miscellaneous items, (appropriated)	800	400
B.—CONSTRUCTION AND REPAIR OF VESSELS.		
Preservation of vessels on the stocks and in ordinary: purchase of materials and stores of all kinds; labor in navy-yards and on foreign stations; preservation of material; purchase and repair of tools; wear, tear, and repair of vessels afloat, and general maintenance of the Navy; incidental expenses, advertising, and foreign postages; and for completing and making entirely ready for sea the five double-turreted iron-clads already in hand and in process of complete repair, (appropriated)	3,300,000	1,750,000

No. 11.—MARINE CORPS.

No. 97.] UNITED STATES MARINE CORPS,
COMMANDANT'S OFFICE,
Washington, D. C., October 25, 1876.

SIR: I respectfully forward to the Department, in duplicate, my annual report on the condition of the Marine Corps.

I have the honor to be, very respectfully, your obedient servant,

J. ZEILIN,
Brigadier-General and Commandant.

Hon. GEO. M. ROBESON,
Secretary of the Navy, Washington, D. C.

HEADQUARTERS MARINE CORPS,
Washington, D. C., October 25, 1876.

SIR: In submitting the required annual report of the condition of the Marine Corps, I have the honor to state that at the present time there are 1,871 enlisted men in service, of which number 989 are on board vessels in commission and 882 at the several shore-stations.

As there have been fewer vessels in commission than usual since July last, the strength of the corps has been permitted to fall below its legal complement; but, as recruits are offering very freely, it could in a few days be filled up to its proper standard, should necessity require it. The duties of that portion of the corps stationed at the several navy-yards being confined exclusively to guarding the public property, leaves little

to report but the fact that these duties have been so performed as to receive the approbation of the commandants of the respective stations, and that at the usual inspections the troops themselves were found in excellent condition, leaving nothing to be desired in their equipment, drill, or discipline. Within the present year the detachment of marines on duty at the navy-yard at Pensacola was withdrawn by order of the Department, in consequence of the continued unhealthfulness of that station, and the men incorporated with the command at Norfolk, Va., where they were most needed at the time. Upon the sale of the navy-yard at Philadelphia, the marines stationed at the barracks there were removed to League Island, and quartered on board the ship St. Louis. This vessel was in commission at the time, under the command of a commander of the Navy, and the placing of this force of marines under his command, it was considered, would be but for a short period. Yet this arrangement still continues. It is, I believe, the first time in the history of our Navy that a body of marines intended exclusively for guard-duty on shore at a navy-yard was ever placed under the immediate command of a Navy officer, and I allude to the subject again with the hope that the Department may soon be enabled to designate some old vessel where this detachment can be placed under the control of its own officers, under the regulations of the Navy providing for the government of marines at the several navy-yards.

As I have but a few days longer to remain in active service at the head of the corps, it may seem out of place for me to make any official recommendation as to its future government or welfare, yet as it is thought probable that some measure will be brought to the attention of Congress, at its coming session, with a view to a re-organization of the corps, I will be pardoned perhaps for desiring to place on record my firm conviction, resulting from forty-five years of active service, that the present organization of the Marine Corps is the best that can be devised, and that it has hitherto fully met the requirements of the naval service and the country.

The testimony given by all the Navy officers summoned before the Naval Committee in relation to the Marine Corps was to the effect that it was a useful branch of the naval service, and could not be dispensed with; but some of these officers, of high rank and eminent service, were of opinion that its present organization should be changed; that its staff corps should be abolished, and indeed that the corps be entirely officered by Navy officers, and its services confined exclusively to naval operations. Against these latter views I would record my earnest dissent.

The Marine Corps, as established by the act of July 11, 1798, was expressly declared to be "in addition to the present military establishment;" and section 12 of that act provides "that it shall at any time be liable to do duty in the forts and garrisons of the United States on the sea-coast, or any other duty on shore, as the President at his discretion shall direct." The organization then given has existed ever since; and in every war that has occurred within this long period the services of the Marine Corps have been required on land with the Army, as well as on board ship, and in naval enterprises.

The Marine Corps of the United States was organized after that of the royal marines of Great Britain—a corps for over two hundred years eminently distinguished for its service on land under command of its own officers as well as for its legitimate duty with the navy. The proud motto of this royal corps, "Per mae, per terram," so well known all over the world, was authorized by the Navy Department to be placed

on the flag of the United States Marine Corps in English words, "By sea and land," in commemoration of our service with the Army in the field during the war with Mexico. The land service of our corps forms a bright page in its history, and it cannot be that the country desires, by a change of its organization, to lessen its usefulness and destroy its *esprit de corps* by confining its services hereafter to purely naval operations.

My object in referring to this matter is with the hope that the Department may coincide with me in the views taken, and should the subject be thought worthy of consideration, to recommend to Congress that the present organization of the corps be retained.

I am, very respectfully, your obedient servant,

J. ZEILIN,
Brigadier-General and Commandant.

Hon. GEO. M. ROBESON,
Secretary of the Navy.

HEADQUARTERS MARINE CORPS,
Washington, D. C., August 14, 1876.

SIR: I respectfully forward to the Department, in duplicate, "estimates of appropriations for the quartermaster's department, United States Marine Corps," for the fiscal year ending June 30, 1878.

I also inclose a letter from the quartermaster in relation to the estimates.

I have the honor to be, very respectfully, your obedient servant,

J. ZEILIN,
Brigadier-General and Commandant.

Hon. GEO. M. ROBESON,
Secretary of the Navy, Washington, D. C.

HEADQUARTERS MARINE CORPS,
QUARTERMASTER'S OFFICE,
Washington, D. C., August 12, 1876.

SIR: I have the honor to submit herewith estimates of appropriations required for the service of the fiscal year ending June 30, 1878, by the quartermaster's department, Marine Corps.

These estimates vary from those submitted for fiscal year ending June 30, 1877, as follows:

Provisions, decreased	$15,545.35
Clothing, decreased	8,722.00
Fuel, decreased	1,391.00
Military stores, decreased	1,000.00
Repair of barracks, decreased	5,000.00
Forage, decreased	1,000.00
Contingencies, decreased	5,000.00

The aggregate amount of these estimates is $37,658.35 less than that asked in estimates of previous year.

I am, very respectfully, your obedient servant,

W. B. SLACK,
Quartermaster Marine Corps.

Brig. Gen. J. ZEILIN,
Commandant Marine Corps,
Headquarters, Washington, D. C.

Estimates of appropriations required for the service of the fiscal year ending June 30, 1878, by the quartermaster's department of the United States Marine Corps.

Detailed objects of expenditure, and explanations.	Total amount to be appropriated under each head of appropriation.	Amount appropriated for the current fiscal year ending June 30, 1877.
PROVISIONS.		
1,200 non-commissioned officers, musicians, privates, and washerwomen, 365 days, one ration per day, 438,000 rations, at 22 cents per day, is	$96,360 00	$90,000 00
CLOTHING.		
2,000 non-commissioned officers, musicians, and privates, at $38.04 per annum, (actual cost per contracts 1875-'76,) is $76,080; and 400 overcoats, at $10.37 each, $4,148, is	80,148 00	80,000 00
FUEL.		
4,194 cords of wood, as follows: one brigadier-general, one colonel, two lieutenant-colonels, four majors, three staff-majors, twelve captains, two staff-captains, fifteen first lieutenants, fifteen second lieutenants, twelve hundred non-commissioned officers, musicians, privates, and washerwomen, six hospitals, one armory, five mess-rooms for officers, sixteen offices for commandant and staff and commanding officers of posts, nine rooms for officers of the day, nine guard-rooms at barracks and navy-yards, three stores for clothing and other supplies. One-fourth additional on 2,400 cords, quantity supposed to be required in latitude north 36 degrees from October 1 to April 30, 600 cords, amounting in all to 4,194 cords, which, at $6.50 per cord, is	27,261 00	25,000 00
MILITARY STORES.		
Pay of mechanics, repair of arms, purchase of accouterments, ordnance stores, flags, drums, fifes, and other instruments for bands	9,000 00	5,000 00
TRANSPORTATION AND RECRUITING.		
Transportation of troops and expenses of recruiting	8,000 00	5,000 00
REPAIR OF BARRACKS.		
Portsmouth, N. H., Boston, Mass., Brooklyn, N. Y., Annapolis, Md., headquarters Washington, D. C., navy-yard, Washington, D. C., Gosport, Va., Mare Island, Cal., and for rent of offices where there are no public buildings	15,000 00	5,000 00
HIRE OF QUARTERS.		
Hire of quarters for officers where there are no public buildings	16,000 00	16,000 00
FORAGE.		
Forage for public horses and the authorized number of officers' horses	5,000 00	5,000 00
CONTINGENCIES.		
For freight, ferriage, toll, cartage, per diem for constant labor, funeral expenses of marines, stationery, telegraphing, apprehension of deserters, &c., oil, gas, candles, repair of gas and water fixtures, water-rent, barrack-furniture, furniture for Government houses and offices, packing-boxes, bed-sacks, wrapping-paper, oil-cloth, crash, rope, twine, carpenters' tools, tools for police purposes, purchase of fire-extinguishers, purchase and repair of hose, repairs to public carry-all, purchase and repair of harness, purchase and repair of hand-carts and wheelbarrows, purchase and repair of cooking stoves, ranges, &c., stoves where there are no grates, gravel, &c., for parade grounds, repair of pumps, and for other purposes	25,000 00	20,000 00
PRINTING.		
For printing and binding, to be executed under the direction of the Government Printer	5,000 00	.....

Estimates of appropriations required for the service of the fiscal year ending June 30, 1878 by the paymaster of the United States Marine Corps.

Detailed objects of expenditure, and explanations.	Estimated amount which will be required for each detailed object of expenditure.	Amount appropriated for the current fiscal year ending June 30, 1877.
PAY OF OFFICERS, NON-COMMISSIONED OFFICERS, MUSICIANS, PRIVATES, AND OTHERS OF THE UNITED STATES MARINE CORPS.		
1 brigadier-general, commandant	$5,500	
1 colonel	4,500	
2 lieutenant-colonels	8,000	
1 lieutenant-colonel, retired, (Rev. Stat., p. 271, sec. 1596)	3,000	
1 adjutant and inspector, 1 quartermaster, and 1 paymaster, (sec. 1623)	10,500	
4 majors, per act of June 30, 1834, (4 Stat. at L., p. 713, secs. 4, 5)	13,750	
3 majors, retired, per act of March 2, 1847, (9 Stat. at L., p. 155, sec. 3)	7,500	
2 assistant quartermasters, per act of August 5, 1854, (10 Stat. at L., p. 586, sec. 1)	5,400	
1 assistant quartermaster, retired, per act of February 2, 1857, (11 Stat. at L., p. 163, sec. 1)	2,100	
20 captains, per act of July 17, 1862, (12 Stat. at L., p. 594, sec. 2)	46,800	
3 captains, retired, per act of June 30, 1864, (13 Stat. at L., p. 144, sec. 1)	4,455	
30 first lieutenants, per act of March 3, 1865, (13 Stat. at L., p. 487, sec. 1)	53,250	
1 first lieutenant, retired, per act of July 28, 1866, (14 Stat. at L., p. 334, sec. 13)	1,125	
30 second lieutenants, per act of July 28, 1866, (14 Stat. at L., p. 337, sec. 37)	38,100	
2 second lieutenants, retired, per act of March 2, 1867, (14 Stat. at L., p. 422, sec. 1)	2,100	
1 leader of the band, per act of July 15, 1870, (14 Stat. at L., p. 157, sec. 7)	948	
1 sergeant-major, 1 quartermaster-sergeant, and 1 drum-major, per act of January 18, 1875, (18 Stat. at L., p. 301, sec. 1)	1,080	
50 first sergeants, Navy Regulations	16,200	
140 sergeants, per act of July 18, 1876	31,560	
180 corporals	35,400	
30 musicians of the band	9,996	
96 drummers and fifers	17,736	
1,500 privates	270,000	
10 clerks and 2 messengers	10,000	
Payments to discharged soldiers for clothing undrawn	20,000	
Transportation of officers traveling without troops	5,000	
	$624,000	$624,000

Respectfully submitted.

J. C. CASH,
Paymaster United States Marine Corps.

HEADQUARTERS MARINE CORPS,
Paymaster's Office, September 9, 1876.

HEADQUARTERS MARINE CORPS,
Washington, D. C., October 20, 1876.

SIR: I respectfully inclose herewith letter of Maj. William B. Slack, quartermaster United States Marine Corps, with schedule in duplicate of proposals received by the quartermaster's department for the supply of rations, fuel, clothing, &c., to the Marine Corps during fiscal year ending June 30, 1877.

I have the honor to be, very respectfully, your obedient servant,

J. ZEILIN,
Brigadier-General and Commandant.

Hon. GEO. M. ROBESON,
Secretary of the Navy, Washington, D. C.

HEADQUARTERS MARINE CORPS,
QUARTERMASTER'S OFFICE,
Washington, D. C., October 19, 1876.

SIR: I have the honor to submit herewith, to be forwarded to the honorable Secretary of the Navy, schedules in duplicate of proposals

received by the quartermaster's department for the supply of rations, fuel, clothing, &c., to the Marine Corps during the fiscal year ending June 30, 1877.

I am, sir, very respectfully, your obedient servant,

W. B. SLACK,
Quartermaster Marine Corps.

Brig. Gen. J. ZEILIN,
Commandant Marine Corps, Headquarters.

Abstract of offers received for furnishing fuel, rations, and supplies to the United States Marine Corps under the cognizance of the Quartermaster's Department.

[Offers for fuel under advertisement May 24, 1876.]

Stations.	Bidders.	Wood, per cord.	Coal, per ton.
Portsmouth, N. H	Hill & Stiver	$8 25	$7 25
	James McCudden	11 00	22 00
	Peters Bros	13 50	8 97
	Russell & Odion	7 25	7 35
	W. H. Sise	.....	7 25
	H. A. Mathes	7 50	.....
	C. E. Walker & Co	8 50	*7 00
	Samuel G. French	13 00	8 90
	N. F. Mathes	*7 00	.....
Charlestown, Mass	Peters Bros	13 50	8 70
	Samuel Knight	*8 00	*6 89
	Samuel G. French	13 00	8 90
Brooklyn, N. Y	Peters Bros	12 50	7 87
	Albert F. Nathen	.....	*5 90
	Samuel G. French	*7 19	6 23
Philadelphia, Pa	Peters Bros	12 50	.....
	James J. Conrery	*7 45	*7 50
	Samuel G. French	.....	7 50
Washington, D. C	Peters Bros	9 90	7 87
	Samuel G. French	.....	7 90
	N. L. Fowler	5 43	6 35
	John McElroy	5 58	6 15
	Johnson Bros	*4 90	*6 00
	John Miller	5 17	6 15
Gosport, Va	Robert J. Neely	4 85	6 95
	Peters Bros	*4 47	*6 19
Annapolis, Md	do	13 50	.....
	N. L. Fowler	6 90	.....
	John Miller	*6 00	.....
Pensacola, Fla	J. O'Neil	4 75	.....
	M. G. Yniestra	4 50	.....
	H. McHatton	*4 50	.....
Mare Island, Cal	William Walker	11 35	24 25
	A. Powell	11 87	24 00
	Arthur M. Ebbetts	.....	*18 90
	Samuel G. French	.....	24 20
	N. F. Mathes	*10 90	22 75

* Accepted.

[Offers for rations under advertisement May 24, 1876.]

Stations.	Bidders.	Rations, per hundred.
Portsmouth, N. H	Peters Bros	$21 50
	H. W. Hall	*18 90
	N. F. Mathes	21 42
	John C. Gilbert	25 00
Charlestown, Mass	Peters Bros	20 50
	H. W. Hall	22 40
	N. F. Mathes	23 00
	John C. Gilbert	25 00
	Peter Higgins	*20 47½
Brooklyn, N. Y	Peters Bros	19 70
	H. W. Hall	*18 45
	John C. Gilbert	19 63
Annapolis, Md	Peters Bros	25 00
	H. W. Hall	*19 25
	Kimberly Bros	24 00
	Ryon & Earnshaw	20 00
	John C. Gilbert	24 90
Washington, D. C	Peters Bros	19 90
	H. W. Hall	*16 25
	Ryon & Earnshaw	18 40
	John C. Gilbert	16 63
Gosport, Va	Peters Bros	18 97
	G. & R. Barrett	21 49
	John O'Neill	30 00
	H. W. Hall	*18 75
	Taylor & Loyall	27 00
	David F. Keeling	24 49
	Kimberly Bros	18 96½
Pensacola, Fla	Russell & Hall	24 50
	H. W. Hall	22 50
	M. G. Yniestra	23 50
	Kimberly Bros	24 50
	N. F. Mathes	*22 99
	Hugh McHatton	30 00
Mare Island, Cal	J. A. McInnis	23 00
	H. W. Hall	24 50
	N. F. Mathes	*22 99

* Accepted.

[Offers for supplies under advertisement dated August 8, 1876.]

Classes.	Bidders.	Amount.
Class No. 1.—Kersey and cloth	B. Y. Pippey, agent	*$21,480 00
	Wilson & Bradbury	*19,000 00
	Peter Higgins	24,862 50
Class No. 2.—Flannels, &c	B. Y. Pippey, agent	*9,170 00
	Wilson & Bradbury	*9,920 00
	Peter Higgins	11,320 00
	William Matthews	11,786 00
	Collady, Trent & Co., (socks)	†500 00
	do	†480 00
Class No. 3.—Linens, &c	B. Y. Pippey, agent	*6,015 00
	Wilson & Bradbury	*5,729 00
	William Matthews	6,104 00
Class No. 4.—Uniform caps, &c	C. F. Bush	*4,343 74
	Horstmann Bros. & Co	*5,040 12
	James G. Davis & Co	5,089 39
	Walton Bros	†30 00
Class No. 5.—Military equipments	Horstmann Bros. & Co	*1,411 70
	Walton Bros	*988 25
	Paul J. Field	663 80
	G. L. Wild & Bro	*266 00
Class No. 6.—Shoes	Walton Bros	12,000 00
	C. R. Williamson & Son	‡10,320 00
	Jacob Reodel & Son	10,350 00
	John Mundell & Co	10,380 00
Class No. 7.—Cartridge-boxes, &c	Horstmann Bros. & Co	*1,050 00
	James G. Davis & Co	*990 00
	Walton Bros	*1,000 00
Class No. 8.—Making and trimming clothing	Jacob Reed	14 [illegible]
	Robert S. Gould	15 52
	Seth C. Keys	16 63
	Abraham Thorp	‡12 09

* Accepted for part of a class. † For part of a class. ‡ Accepted entire class.

W. B. SLACK,
Quartermaster Marine Corps.

HEADQUARTERS MARINE CORPS,
Quartermaster's Office, Washington, October 19, 1876.

No. 12.—REPORT OF PROFESSOR EDWARD S. HOLDEN ON ASTRONOMICAL INSTRUMENTS.

UNITED STATES NAVAL OBSERVATORY,
Washington, November 9, 1876.

SIR: I have the honor to transmit herewith a report on the astronomical instruments of the loan collection of scientific apparatus at the South Kensington Museum, London, and accompanying photographs,* made by Prof. Edward S. Holden, United States Navy, in pursuance of a special order from the Department, dated June 1, 1876.

Very respectfully, your obedient servant,

C. H. DAVIS,
Rear-Admiral, Superintendent.

Hon. GEO. M. ROBESON,
Secretary of the Navy, Washington.

Report upon the astronomical instruments of the Loan Collection of Scientific Instruments at the South Kensington Museum, 1876, by Edward S. Holden, Professor, United States Navy.

To the honorable the Secretary of the Navy, Navy Department:

SIR: On the 2d of June, 1876, I received the following order:

NAVY DEPARTMENT, WASHINGTON, *June* 1, 1876.

SIR: The Department desires to have an officer at the South Kensington Loan Collection of Scientific Instruments at London, to examine and report upon it. You are hereby directed to proceed without delay to London for this purpose, and on your arrival you will present yourself to the presiding officer of the Loan Committee and communicate these instructions. On the close of the exhibition you will return to your present station.

I am, very respectfully,

GEO. M. ROBESON,
Secretary of the Navy.

Prof. EDWARD S. HOLDEN,
United States Navy, Washington, D. C.

On the 10th of June I sailed from New York, arriving at Liverpool June 19, where I spent two days, visiting the observatory of Liverpool under the charge of John Hartnup, esq., F. R. A. S., and studying the systems of distributing public time, and of rating chronometers with respect to temperature, which are now practiced at that observatory. On the 21st of June I arrived at London, where I at once reported, as directed by my instructions, to the presiding officer of the loan committee. The official reply to the communication of my orders is annexed hereto, marked "B." [Omitted.] On the 6th of September I left London for Liverpool, whence I sailed for New York on the 7th, arriving on the 19th, and on the 21st of September I reported to the commanding officer of the Naval Observatory for duty.

During my stay in London, I was occupied in making a minute and detailed study of the astronomical instruments of the exhibition, and in connection with this I visited various observatories and workshops, where I found special instruments which were not represented in the exhibition, or where I was afforded special facilities for examination of such. I visited the observatories of Greenwich, Liverpool, Edinburgh, and the private observatories or laboratories of Dr. William Huggins, F.

* Plates 1 to 21 are omitted, owing to cost and length of time required for their preparation.

R. S., F. R. A. S., etc., William Lassell, esq., F. R. S., F. R. A. S., etc, J. Maclean, esq., F. R. A. S., etc., E. B. Knobel, esq., F. R. A. S., etc., R. S. Newall, esq., F. R. S., F. R. A. S., etc., J. N. Lockyer, esq., F. R. S., F. R. A. S., etc., as well as the workshops or places of business of Cooke & Sons, Adam Hilger, Browning, and Troughton and Simms, mathematical and astronomical instrument makers. I also corresponded with Repsold and Brother, Hamburg, Breithaupt and Co., Cassel, and Lingke and Co., Freiburg, with reference to their instruments in the exhibition, and received from them photographs of their astronomical instruments and information in regard to them.

I desire to express officially my thanks to these gentlemen as well as to the authorities of the loan collection, particularly to J. Norman Lockyer, esq., and to Major Festing, R. E., to the Astronomer Royal, and to E. Dunkin, esq., F. R. S., of the Greenwich observatory, for many courtesies received at their hands.

I understood it to be the object of my mission to London to study the instruments of astronomy exhibited at the loan collection, with particular reference to new instruments and processes, and to important advances in the art of astronomical instrument making, for the special purpose of noting any novel forms or any improvements upon old forms which might be of use in the United States, either to the Naval Observatory, in astronomy, or to the Hydrographic Office and the Navy generally, in geodesy or navigation. As will be seen in the more special account of the exhibition, the newer forms of instruments were not, at least in the department of astronomy, completely represented. This is quite natural, as a truly *novel* form of instrument is often, nearly always, unique, and the only exemplars are to be found either in the workshops or in the hands of private investigators, who can ill spare them for public exhibition. The very complete catalogue of the exhibition published by direction of the council of the committee on education, supplies in general a tolerably full account of each instrument exhibited, and I have thought it proper to confine my written report to cases where additional information, only to be acquired by a personal inspection of the instrument in question, was necessary, and to an account of such improvements as I had the opportunity of seeing, which are not described elsewhere.

The system of distributing public time for the use of ship-masters and others, and the steps now taken by various countries to furnish accurate time to navigators, I have described more in detail on account of the very practical and valuable nature of the subject.

It must be remembered that although every facility was given me for the examination of the instruments in the exhibition, their true test will always be their actual performance in skilled hands; it was of course manifestly impossible to use these instruments as they would be used in the field, and I have therefore in some cases referred in detail to previously published accounts of their work.

I.—SKETCH OF THE FORMATION OF THE COLLECTION.

The first meeting of a committee of most of the leading men of science in England was held early in 1875, for the purpose of expressing publicly a desire that a temporary loan collection of scientific instruments and appliances and of the results of scientific research should be exhibited in London. This exhibition it was intended should partake somewhat of the nature of the *Conservatoire des Arts et Métiers* in Paris, so as to afford men of science and those interested in education an opportunity of seeing what was doing by other countries than their own (and also by their own) in the production of apparatus both for research and

for instruction. This could not fail to be of interest to several classes of persons—to scientific men themselves, to teachers of science, and to students. Great pains was taken to make the arrangement of the exhibition *topical*, by subjects, so that instruments of each class could be studied together.

In this way, any one who desired to study a special class of instruments would find them together, arranged in something like the historic order.

Invitations were sent by the authorities to the various governments and to public institutions and private men of science. In most cases this invitation was cordially responded to, and in most countries a subcommittee of its eminent men was appointed to forward the purpose of the exhibition; in nearly every case with the most gratifying results. Old and rare apparatus and instruments were sent from their repositories with cheerfulness, and were exhibited in London along with the modern forms to which the earlier instruments have given rise, so that in some cases the whole history of a subject, so far as it was to be learned from the instruments employed, was to be seen at a glance.

It is not necessary to mention all the striking appositions thus afforded; an example of them may be given in the fine exhibit of Italy, where the original telescope of Galileo, with which he discovered the phases of Venus, the satellites of Jupiter, the spots on the Sun, the constitution of the Milky Way, etc., was shown, along with many other pieces of ancient apparatus, the prototypes upon which modern science has built its instruments of precision. The absence of any exhibit from the Government of the United States was noticeable, and was to be regretted, particularly as the fine collection of scientific instruments, apparatus, and the products of research at the Government building of the International Exhibition at Philadelphia shows that in many branches we have already attained an honorable, and in a few a foremost, position.

In order to make the exhibition more fruitful, the managers of the loan collection caused to be printed two works of high importance. The first is a "Hand-book to the Special Loan Collection of Scientific Instruments," and consists of general essays by eminent men of science. The second is the extensive catalogue, to which the second section of this report may be considered in part a supplement. This catalogue contained a description of each of the instruments exhibited, and in many cases gave illustrative wood-cuts and diagrams, with examples of its use, and a brief history of the problem which it was designed to solve. The brevity of the present report is due to the general excellence and thoroughness of the catalogue. In order to utilize the exhibition to the utmost, daily lectures were given, official programmes of some of which are annexed, marked "A."

If these lectures were not sufficiently detailed to cover the peculiarities of special pieces of apparatus, "demonstrations" were given once or twice a week for each instrument, in which the instrument was elaborately explained and its working exemplified. Thus the special uses of each instrument were to be known, either by examination of it, from the catalogue, or from the "demonstration;" and the general relations of classes of instruments were sought to be explained in the lectures. It would, of course, be impossible, in any brief account of so large a collection, to give an adequate idea of its contents. This must be gained from the catalogue, which contains accounts of instruments relating to every branch of modern science. The instruments themselves completely filled fourteen or fifteen large rooms, and the second edition of

the catalogue contained 957 pages, one page referring often to many entries.

As far as can be judged, the special and peculiar merit of the exhibition was its exposition of the historical side of the various subjects. In many departments little was left to be desired in this direction. In such a subject as telegraphy, for example, the whole history was presented (with the exception of important American methods) from its foundation to the present day. Particularly in the department of chronometers and clocks a full exhibit was attained, in which, however, the admirable instruments of American makers, like Negus and Bond, were not seen. In many special pieces of apparatus, such as chronographs, sextants, field astronomical instruments, personal-equation machines, objectives, etc., the perfection of American instruments made their absence conspicuous to any one who was acquainted with them. I have annexed a list of the foreign visitors to the exhibition, marked "C," [omitted.]

II.—ASTRONOMICAL AND NAUTICAL INSTRUMENTS AND AUXILIARY APPARATUS.

In what follows I have brought together a portion of my notes on astronomical and nautical instruments, on domes for large telescopes, etc. The following section, taken in connection with the catalogue of the loan collection and with the photographs annexed, [omitted,] and also with published descriptions of instruments in the various scientific journals and annals of observatories, will give most of the information attainable from an examination of the loan-collection instruments. It cannot be too much insisted on, in the case of new instruments, that the true test of excellence is their success, after thorough trial, in the situations for which they are destined, and not their performance under exceptionally favorable conditions.

Equatorial Mountings.

I. *Refractors.*—The accompanying photographs (numbers 3 to 7, inclusive) give a better notion of the styles of mounting adopted by the several makers than any description could do which was not aided by detailed wood-cuts. In this connection the various descriptions in the catalogue should be consulted. Figure 3 is a photograph of the new heliometer for the observatory of Strasburg. It was made by Repsold and designed by Winnecke. It is similar to those used on the Russian transit of Venus expeditions. The instrument can be used in any latitude from 0° to 66°. All movements can be controlled from the eye end. The slide bars of the objective move simultaneously on cylindric surfaces in opposite directions.

One of the most interesting models at the loan collection was one of the mounting, etc., of Mr. Grubb's new 27-inch refractor, which is intended for the Vienna observatory. It is not possible adequately to describe it without a number of cuts, but I condense from my notes sufficient data to make its general features understood. The *pier* is of two parts, A and B, both rectangular in cross-section, cast of iron, and hollow. The clock-work is placed within them. To the inclined top of B is bolted a heavy slab, C, of iron, for a bed plate. The *polar axis* (p) is inclosed in a hollow frustum of a cone, D, which is supported at its upper end by a flanged piece, E, the lower end of which is bolted to C. The model did not show a tail-screw to support the thrust of the polar

axis, and I presume this plan is not adopted. The upper bearing of the polar axis is relieved, as in the 26-inch Clark telescope at Washington, by a bent lever. The head of the polar axis carries a cubical box, inside of which are two Y's, in which the *declination axis* turns. One end of the declination axis terminates in a heavy cradle, into which the telescope is strapped by steel straps. The declination axis has 4 friction-rollers, two at each end of the counterpoise-levers; at the head of the polar axis are four friction-rollers, also for the declination axis. This system is somewhat complicated, and requires a model to understand fully its operation. The *declination circle* is arranged as at Washington. The hour circle is probably intended to go inside of D. The *sector* is large, and acted on directly by the *worm* from the clock. The system of slow motions, clamps, etc., are explained in the catalogue. There are four *finders*, one large one with a small one attached, and two at the side.

Fig. 4 is a photograph of a refractor of 9 inches aperture and 13 feet focus, by Repsold and Brother, Hamburg.

Fig. 5 is and 8-inch refractor, by Troughton and Simms, for the Melbourne observatory.

Figs. 6 and 7 represent a 6-inch refractor, by Cooke, of York.

These figures fairly represent the various European styles of mounting. For more detailed accounts, the descriptions of Figs. 3 and 4 may be consulted in the catalogue of the loan collection.

II. *Reflectors.*—The mountings of Browning, now well and favorably known, are used for most reflectors of ordinary size. I had an opportunity to test two of Browning's reflectors, of 8 and 15 inches aperture respectively, and the mounting seems to be in every way suitable and convenient.

For larger telescopes of this class a mounting may be used like that devised by Grubb, of Dublin, for the 4-foot reflector at Melbourne, (of which a model was exhibited at South Kensington,) like that of the new Paris 4-foot reflector, or, finally, in the form described by Lassell in Memoirs of the Royal Astronomical Society, volume XXXVI. Both the first forms have been pronounced satisfactory by high authority; the first showing in particular great steadiness and unusual convenience of manipulation. The third, as applied to Lassell's 2-foot telescope, I personally used on several occasions, and found it light, easy to manage, and convenient. For a much larger aperture I should be inclined to doubt its perfect steadiness.

Meridian-Circles.

Fig. 1 is a photograph of the Strasburg meridian-circle, made by Repsold and Brother.

Fig. 2 is a view of a transit-circle now making by Troughton and Simms for the observatory of Glasgow, Missouri.

It is worthy of note that both these fine instruments are in most of their essentially new features modeled from the transit circle of Harvard College observatory, which was designed by the late Professor Winlock, and made by Troughton and Simms. Both have the cast-iron microscope bearers, which form so novel and important an invention. In the Strasburg instrument the axis is hollow and has at one end a lens of 2 inches aperture. In the focus of this at the other pivot is a plate, with a small hole in it, for controlling the position of the axis. A central illumination of the threads is secured by an illumination from a small mirror at the back of the objective. The eye and object ends are interchangeable. Nadir observations can be taken with the level on, and

also reflex observations from 8° to 60° nadir distance. It is 6 inches aperture, 6 feet focus, and has 2 feet circles of metal.

Portable Astronomical Instruments.

The figures 8 to 12 are representations of portable astronomical instruments, mainly by Repsold and Brother, of Hamburg, whose instruments have deservedly attained the highest reputation for precision and for a kind of elegance not necessarily associated with precision. Their mechanical arrangements will well repay study.

Fig. 8 is a Repsold transit instrument suitable for use in any vertical plane. This instrument and the following ones are those in use in the field operations of the Russian and other geodetic surveys, and numerous proofs of their excellence could be cited from official reports.

Fig. 9 is the same transit instrument intended only for use in the meridian.

Fig. 10 is the portable vertical circle, which is essentially a theodolite of great perfection.

All the above instruments have a tube of only half the focal length of the objective, and all are provided with hanging levels, which constantly remain on the axes. The original idea of a telescope shortened in this way by reflecting the rays through the axis is due to Steinheil, of Munich. Steinheil's original instrument was exhibited at South Kensington, and also a larger example of it made by August Lingke and Co., of Freiburg, for Dr. Bruhns, director of the observatory of Leipzig. In this form the horizontal axis is itself the telescope, and the prism and objective are at one end of this axis, the ocular being at the other. A similar instrument is now making by Fauth and Co., of Washington. The principal danger to be anticipated in the one exhibited at South Kensington appeared to be a flexure of the tube from the effects of the clamp in zenith distance, and although this was foreseen by the makers, it remains to be seen from actual trial whether the means adopted to avoid such a flexure are adequate.

In the Repsold instruments (Figs. 8 and 9) it will be observed that the finding-circle is on the other end of the horizontal axis from the ocular, an arrangement which it would seem is slightly inconvenient, and by which not enough is gained to compensate for the additional labor of observing.

Fig. 11 is a portable transit of ordinary construction, by Repsold.

Fig. 12 is an alt-azimuth for astronomical use, by Troughton & Simms, and designed by Mr. Russell.

Geodetic and surveying instruments.

Fig. 13 is a 2-foot theodolite, by Troughton and Simms.
Fig. 14 is a 2-foot theodolite, by Troughton and Simms.
Fig. 15 is an 18-inch theodolite, by Troughton and Simms.
Fig. 16 is an 18-inch theodolite, by Troughton and Simms.
Fig. 17 is a tachymeter, by Troughton and Simms.
Fig. 18 is a small 5-inch tachymeter, by Troughton and Simms.
Figs. 19, 20, and 21 are geodetic instruments, by Breithaupt and Co.

Objectives.

I saw no objectives in process of manufacture in England. Unfavorable weather prevented me from making as careful an examination of

the qualities of the objective of 25 inches aperture belonging to R. S. Newall, esq., as I hoped for. The examination I was able to give it was mainly directed to the effect of the residual chromatic aberration or secondary spectrum upon the image of a bright object. The amount of secondary spectrum in this telescope of 25 inches aperture and 30 feet focus is, as far as I could judge, not greatly different from that in the Clark telescope at the Naval Observatory of 1 inch more aperture and 30 inches more focal length, which speaks well for the color-correction of the Cooke glass. It is worthy of remark that Dr. Huggins employs a thin layer of oil between the two glasses of his 15-inch Grubb refractor, with the object of diminishing the internal reflections of the incident light. I am not aware that this has been tried in the United States.

Speculums.

The performance of the silver-on-glass speculums, made by With, for Browning, I had an opportunity of testing, (with an 8-inch speculum,) and in this case the star-images were neatly defined, showing no effect of flexure, as, indeed, in so small an aperture was to be expected.

By the personal kindness of Mr. Lassell, the maker and owner of many metal speculums of various apertures, from 4 feet down to 3 or 4 inches, I was enabled to test practically the efficiency of his system of counter-levers for removing flexure from speculums of large size. The system was applied to the celebrated speculum, of 2 feet aperture, with which Mr. Lassell has made his discoveries of two satellites of Uranus, a satellite to Neptune, and one to Saturn, and has prosecuted his important observations of nebulæ.

I found that with fourth-magnitude stars, and below, the telescope might be turned from near the zenith to 106° of north polar distances quickly, without affecting the roundness of the images or of the diluted disks of stars.

The speculum metal made by Mr. Lassell possesses great advantages over that formerly employed by the two Herschels and Lord Rosse, since it is but little likely to tarnish. The surfaces of some small speculums which I saw were almost perfectly free from stain, although many of them were over twenty years old, and Mr. Lassell even produced some mirrors which had been boxed up for that length of time, which were almost entirely free of stain, except at the edges.

The metal employed by the Herschels and others required constant polishing, as we know, and it is extremely important that it should be known that it is possible to make a metal which will retain its lustre.

It has always been supposed that the speculum metal was inferior to glass, if for no other reason, because it required repolishing at short intervals, and in each repolishing there was great danger of losing the original figure, so that the labor of repolishing might easily become the labor of figuring a new mirror. It certainly is not generally known that this is not necessarily true, and I am not aware that any published reference to this fact has been made by Mr. Lassell.

Driving-clock contrived by William Lassell, esq.

This is very simple in construction, and its action is as follows: The weight gives motion to the axis A, to which the collar BB is attached. As EE move upward, they carry with them the hinged arms CC. These lift the slipping-collar DD on the axis A. *aa* is a revolving plate, firmly attached to DD. As this rises it rubs against the fixed spring *bbb*, and

retards the motion. The screw *k* lifts the whole spring *bbb* bodily, fo purposes of regulation. This form is interesting, as it was essentiall

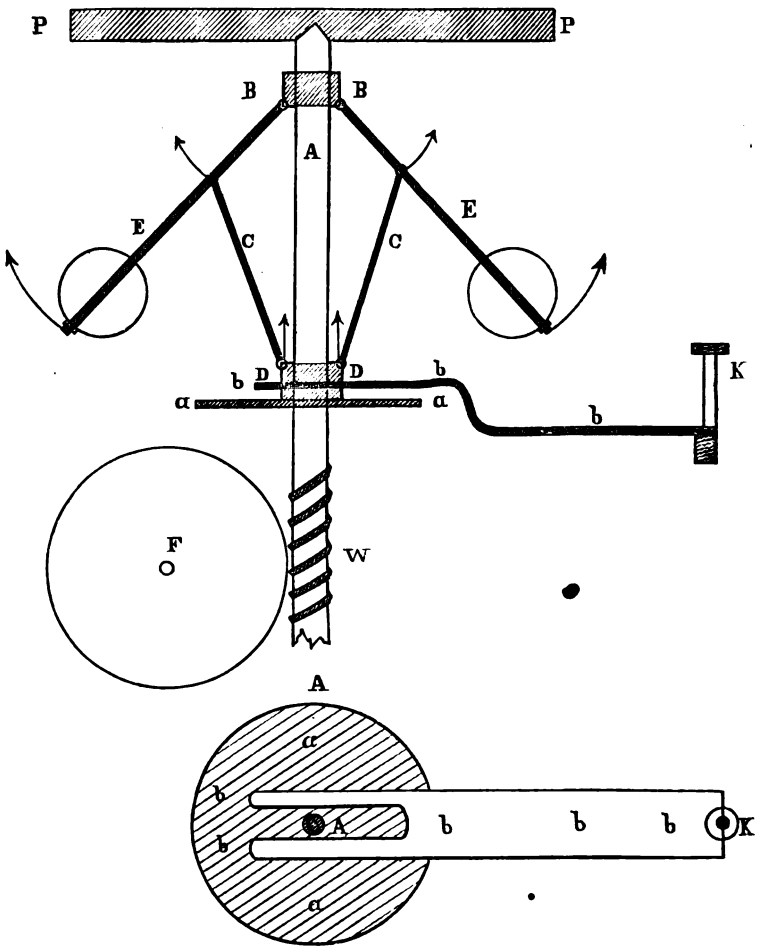

the one employed for the transit of Venus driving-clocks, and as a simp modification of it is used by Browning.

Driving-clock devised by A. Hilger.

The driving-clock devised by Hilger for the large siderostat exhibit by Colonel Campbell, is said to perform extremely well. The mech ical finish is certainly exquisite. It is a modification of the Watt g ernor, so that when the balls rise they act upon a slipping-jacket to t main axis, (which is, of course, vertical,) and by means of a system bent levers alter the inclination of two large flat fans, in this man changing the resistance. It is provided with several adjustments, means of which it is intended that the variable resistance to the moti shall be brought within the regulating power of the fans. The acti is too complicated to be explained without detailed wood-cuts.

atorial driving-clock, controlled by a standard-clock, contrived by Thomas Grubb, esq., F. R. S., for William Huggins, esq., F. R. S.

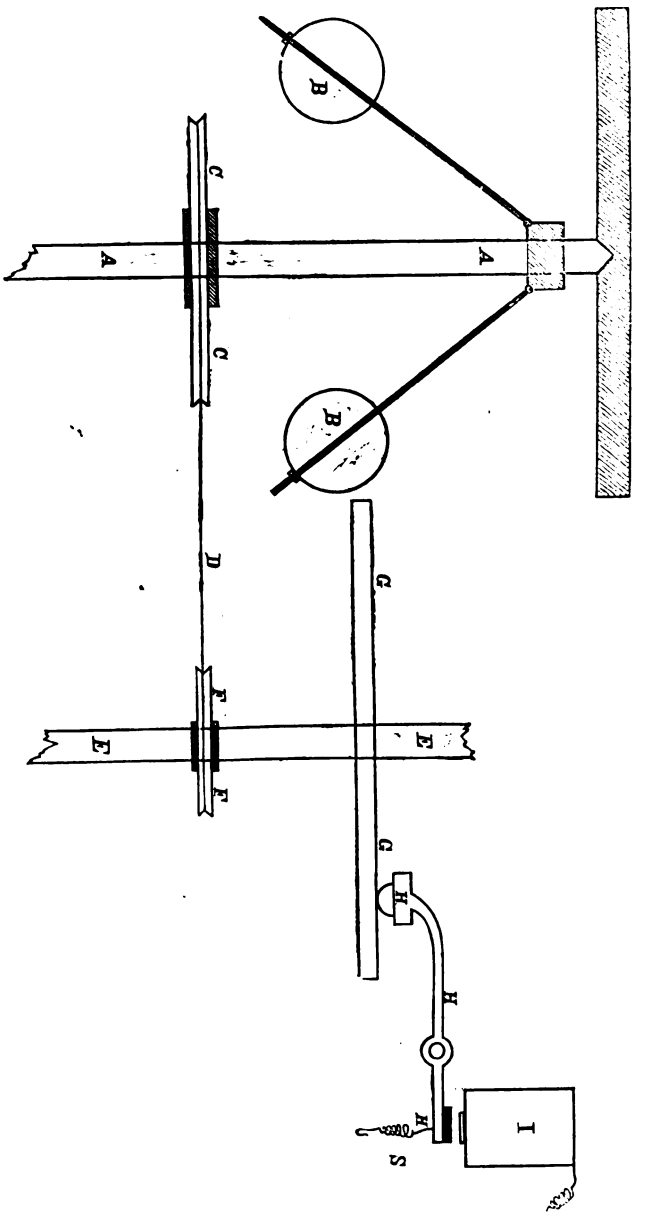

Fig. 1.

scription.—In Figure 1 motion is given to the main axis A A by the ht, and this motion is made approximately uniform by the governor A A is connected with a second axis, E E, by the endless cord D, ng round the two wheels C C and F F. The axis E E carries a

plate, G G, on which pressure is exerted by the lever H H H, which is controlled by the electro-magnet I. S is a coiled spring acting on H H H in opposition to I.

Fig. 2.

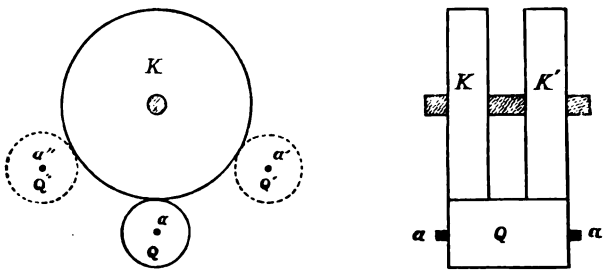

In fig. 2, K is a toothed wheel connected with the axis A A in such a way that when the driving-clock is moving correctly K revolves *n* times per minute. K′ is a toothed wheel of the same number of teeth as K, which is driven by the standard (astronomical) clock *n* times a minute. In Dr. Huggins's observatory K′ is driven by a pendulum controlled by the standard clock. Q is a pinion working into both the toothed wheels K and K′. It revolves on an axis, *a a*, which can itself move round the circumference of K in the circle K *a a′ a″*. When K and K′ have no relative motion, or when the driving-clock is performing correctly, Q stays at the lowest point, *a*, and the electro-magnet I, whose action is dependent on the position of Q, is inert. The driving-clock is so regulated as to run slightly too fast, and as K thus moves a little faster than K′, the pinion Q moves upward in the direction Q *a′*, and excites the electro-magnet I. This causes a pressure by H H H on the plate G G, which retards the motion, which is again accelerated, and so on. Dr. Huggins' report on this clock, which has just been erected, is favorable.

Bright-line micrometer.

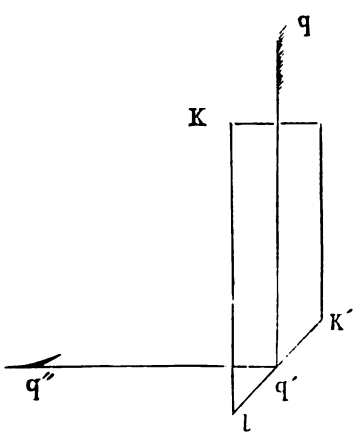

An ingenious bright-line micrometer has been devised by Hilger, optician, of London, which is decidedly the simplest and best of those now known for use in spectroscopes.

K K′ *l* is a plate of glass, into which the light is thrown from *q*. This beam passes from *q* to *q′*, is reflected, and emerges, passing to *q″*. The surface K *l* is blackened, and a thin line parallel to K *l* is left transparent. This line shows bright in a dark field. The piece of glass may be made extremely small and mounted in a micrometer. This micrometer has worked well in spectroscopic observations, and is now in use at Greenwich and elsewhere.

Chronometers.

In the report of the Astronomer Royal to the board of visitors for 1875, we find an account of a supplemental mechanism, devised by Sir

George Airy himself, for attachment to chronometers, with a view of mechanically correcting chronometers for temperature. I quote from page 19 as follows: "I have long remarked that in ordinary good chronometers the freedom from irregularities depending on mechanical causes is most remarkable, but that, after all the efforts of the most judicious makers, there is in nearly every case a perceptible defect of thermal compensation. There is great difficulty in correcting the residual fault, not only because an inconceivably small movement of the weights on the balance-curve is required, but also because it endangers the equilibrium of the balance. To remedy this, I have introduced small supplementary weights carried by means of a supplementary bar, (rotating with stiff friction on the balance-staff,) at whose ends are very light springs, carrying the supplementary weights and constantly pressing them to the interior of the balance-curve. When the supplementary bar is so turned that the supplementary weights are near the end of the balance-curve, the compensation is large; when they are near the root of the balance-curve, it is small. The movement from one state to the other is so simple that probably an assistant of the observatory will be able to manage it, and it does not interfere with equilibrium. This arrangement has received the approval of some able chronometer-makers, and may perhaps with advantage be adopted generally."

In subsequent reports the astronomer royal speaks favorably of this device after trial, and at the present time all chronometers presented for the annual trial (and thus for purchase by the government) are required to be furnished with this additional compensation. It would seem that this is an important device, which it would be desirable might be carefully tried by American makers, since it seeks to correct by mechanical means the influence of temperature upon the rate, which it is the object of so many investigations and observatories to determine.

Spherometers.

This instrument may properly be regarded as a valuable aid to the astronomer for measures of curvature of glass surfaces, etc., and Professor Harkness, United States Navy, has recently described an important application of it to the determination of the inequalities and irregularities of the pivots of transit instruments. As usually constructed, it is capable of measuring a distance of about $\frac{1}{25000}$ of an inch or less. When quantities so small as this are to be measured, the chief difficulties consist in finding the precise value of each revolution of the micrometer-screw, and not only the true values of each *whole* revolution, but the amounts of those errors, which are sure to exist, which have a period of one turn of the screw. Lord Lindsay is now having an instrument of this kind made in which the periodic errors of the screw can be readily determined (or eliminated) according to a plan which I had myself proposed about the same time as Lord Lindsay.

Each of the three legs of the instrument is itself a micrometer-screw, (in this case of 90 threads to the inch,) with a divided head, the main screw having 100 threads to the inch. By repeating a measure with the legs of the instrument at various settings, the periodic errors of the chief screw may be eliminated, or by suitable and obvious means these periodic errors may be determined once for all, and tabulated for subsequent use.

Several delicate spherometers are described in the catalogue, but all are of the old form, in which the periodic errors of the screw are extremely difficult to determine, and in which they cannot be eliminated.

Domes for large telescopes.

It is probable that for a large dome, over 40 feet in diameter, the spherical form will always be used, and I gave particular attention to structures of this class. Of the smaller turret-domes, that of Dr. Huggins is a model for convenience and lightness. The loan collection contained a working model of the frame-work of a steel dome made by Grubb, of Dublin, for the Vienna equatorial, (27 inches aperture and about 33 feet focus.) The frame-work is of trussed iron beams. Two constitute the main arches and embrace the slit. These are about 6 to 7 feet apart. Two perpendicular to these, and about the same distance apart, abut on them but do not cross them. Four others abut at the junction of the first four, making 12 *half* arches in all. The arrangement is somewhat peculiar, but is to be commended. Seven horizontal and circular bands of iron fastened to these beams allow the fastening of the sheets of steel. This dome will be erected in Vienna in 1877, and, if successful, its arrangements will be most convenient to follow in any future structures. An ingenious shutter of iron, counterpoised, is provided, which passes completely over the dome. Through the medium of several counter-weights the varying load to be lifted in opening the shutter is balanced by a varying counterpoise. When the shutter is half opened the counterpoise-weights do not act, they being at the lowest point of their fall; from this point until the shutter is fully opened the counterpoises are successively lifted, so that they are in position to begin the reverse process of closing the dome. I have been thus detailed in describing it, as the problem of providing a good covering, easily removed, for a large dome, is not an easy one, and as Mr. Grubb's seems to promise well.

The dome made by Mr. Newall is of iron, 40 feet in diameter, and works well, although the rotation is not so easy as it would have been had the "live-ring" system proposed by Mr. Grubb (and adopted in the large dome of the naval observatory) been used. Mr. Newall's dome is well known from photographs, and a detailed description of it is therefore unnecessary. Through Mr. Newall's kindness I have the dimensions of the various pieces. Its whole weight is only 10 tons; it is abundantly strong, and with the exception of the apparatus on which the dome rotates, it would serve well as a model for future structures. Mr. Newall has an ingenious plan (not carried out) for moving the dome by a caloric engine, the principal novelty of which consists in his arrangement for reversing the motion of the dome without reversing the engine.

III.—TESTING CHRONOMETERS FOR TEMPERATURE AS PRACTICED AT THE LIVERPOOL OBSERVATORY.

Under direction and at the expense of the marine committee of the Mersey Docks and Harbor Board, (Liverpool,) an observatory has been long in operation under the charge of Mr. Hartnup, F. R. A. S., etc. Its objects are—

1st. Rating and testing chronometers. This is done free of charge for the chronometers of any vessel which has paid harbor and dock dues;

2d. Disseminating correct time by means of signals, so as to enable shipmasters, chronometer-makers, and others to rate their own instruments;

3d. Making meteorological and astronomical observations.

The main purpose of the observatory is to be useful to the shipping in the harbor and port, and it drops a time-ball, fires a time-gun, and reg-

ulates various clocks in the city and on the docks for this object, so that any shipmaster is independent of the chronometer-makers.

This work has been continued for many years, and a large mass of statistics concerning the running of the chronometers of ships sailing out of Liverpool has been accumulated and partially discussed, and in the later years of its activity much attention has been paid to the question of determining for a given chronometer which has been rated at three different temperatures the rate at *any* temperature.

The importance of the investigation cannot be overestimated, and I have thought it proper to give some account of the successive steps taken in this direction and of the present condition of the inquiry.

In the earlier history of the observatory, its attention was confined to the *rating* of chronometers, and when any instrument was sent out with a given *correction* and *rate*, a record was kept of the fact.

On the return of the instrument to Liverpool every effort was made to find the *correction* and *rate* which was given at the foreign port, and in this way a vast amount of statistical information concerning the running of the chronometers of merchant-ships out of Liverpool was accumulated.

For access to these statistics, published and unpublished, and for a complete view of the methods adopted, I have to thank the courtesy of Mr. Hartnup and of his son, who are now in charge of the establishment. The following table is extracted from the report of the director for 1863, page 4.

The *first* horizontal column contains the length of the voyage in months; the *second*, the average error of longitude in geographical miles of the equator deduced from the means of 1,700 chronometers, and the remaining columns show the average error of the best ten instruments in one hundred, of the second best ten, &c. I have only taken so much of the table as would include a voyage of four months, since a vessel could hardly be without means of correcting her chronometer for a much longer time than this. We may fairly say that this table represents the danger which the merchant ships of Liverpool actually were subjected to for many years on account of erroneous running of their chronometers, and because the sea-rates varied from the shore-rates. It must also be remembered that from this table all cases of vessels which were shipwrecked (on this and other accounts) are omitted, so that, no matter how impossible it may at first sight seem to be that such enormous errors existed, it is yet a matter of fact that the errors are *under* and not *over stated*.

Table showing error of longitude in geographical miles on the equator, deduced from 1,700 *chronometers.*

Length of voyage.	One month.	Two months.	Three months.	Four months.
Average error from 1,700 chronometers	6	14	23	33
Average error from the best 10 in 100	0	0	1	1
Average error from the second best 10 in 100	1	2	3	4
Average error from the third best 10 in 100	1	4	6	8
Average error from the fourth best 10 in 100	2	5	9	13
Average error from the fifth best 10 in 100	3	7	12	17
Average error from the sixth best 10 in 100	4	9	15	22
Average error from the seventh best 10 in 100	5	11	18	28
Average error from the eighth best 10 in 100	7	15	25	36
Average error from the ninth best 10 in 100	9	24	41	61
Average error from the worst 10 in 100	25	62	101	143

Before examining the table in detail, it is extremely important to remark that if the resulting "error in longitude" was caused simply by a difference between the *sea-rate* and *shore-rate*, the numbers in the top line should be in the proportion 1, 2, 3, 4; that is, for a voyage of two, three, etc., months, the "error of longitude" should be, in the average of so many cases, 2, 3, etc., times as great as the error for one month. These ratios, instead of being 1, 2, 3, 4, are 1, 2.33, 3.83, 5.50.

Nothing could show more plainly the fact, that not only did the sea-rate vary from the shore-rate, but that the sea-rate itself changed. The *principal* agent in causing the change of rate was change of temperature. Examining the table in detail, it becomes necessary to recollect that it is a matter of record that these actually were the errors of chronometers carried on a large number of ships sailing out of Liverpool. The average errors derived from no less than 1,700 chronometers are enormous, being as great as 33 miles for a voyage of four months.

Among the many vessels carrying these instruments were a large number going on long voyages to India, Australia, and South America, and in many cases these vessels would necessarily be between three and four months or more on the voyage, often without sighting land. It appears from this table that the average error to be *expected* on such a voyage and with such chronometers as they had (up to 1863) was no less than 33 miles! It is plain that no such errors are to be found in the chronometers used by our own naval vessels, nor were American merchant-vessels during the same period so badly provided for, but it is certain that English vessels were provided on the whole with extremely poor instruments.

Probably the chronometers in use in the United States Navy would all fall within the first three categories, and most of them within the first two.

Mr. Hartnup became early convinced of the necessity of testing his chronometers for the purpose of determining the effect of temperature upon their rates. For this purpose comparatively inexpensive apparatus was procured, by means of which the chronometers could be tested at 55°, 70°, and 85° F., these limits including the temperatures to which they would usually be exposed at sea. It soon became evident that these experiments were directly useful to chronometer-makers, and thus indirectly to ship owners and masters, as by the data which could be furnished a chronometer-maker was able to materially improve the compensation of his instruments. As an example of this I select a case from the report for 1869. A chronometer, supposed to be a very good one, was left at the observatory for thirty days, and tested at temperatures of 55°, 70°, and 85°, with results as exhibited below:

First period of 6 days:	rate = + 6s.93;	temperature = 55° F.
Second period of 6 days:	= − 3 .40;	= 70°.
Third period of 6 days:	= − 12 .43;	= 85°.
Fourth period of 6 days:	= − 3 .03;	= 70°.
Fifth period of 6 days:	= + 6 .32;	= 55°.

It was again given to the maker and by him altered so that its rate should change as little as possible over a range of 30° F., by the aid of the data above given, and on its second trial the improvement was material, as may be seen.

First period of 6 days:	rate = + 1s.78;	temperature = 55° F.
Second period of 6 days:	+ 1 .05;	= 70°.
Third period of 6 days:	+ 0 .18;	= 85°.
Fourth period of 6 days:	+ 1 .12;	= 70°.
Fifth period of 6 days:	+ 1 .78;	= 55°.

It is clear that had this chronometer been sent to sea in its first state, and without trial, it might have led to serious results. On a voyage from Liverpool to Rio in the spring of the year, for example, the ship might easily have rapidly passed from a mean temperature of about 55° to one of about 85° in a few days; and if no land was seen, there would have been no way of knowing that the rate had changed from $+6^s.9$ to $-12^s.4$ daily, a change of $19^s.3$, or about five miles daily.

It is plain that the observatory was of use in enabling the maker to reduce the difference between the rates at 55° and 85° so materially, but there still remains over, in the second trial, a difference of $1^s.5$ in these rates. In the cases of six *good* chronometers these outstanding differences were $0^s.07$, $0^s.03$, $2^s.62$, $2^s.76$, $3^s.26$, $1^s.96$; in some serious, in others not.

The chronometer-maker can never apply the test in the first instance so conscientiously as it can be done in an astronomical observatory. And again, no matter how carefully his work is done, (and in modern chronometers of distinguished makers it is extremely well done,) he cannot by any means remove the influence of temperature upon the rate. He can approximate to it, but in no case can he be sure that a change of 20° in the temperature, to which his chronometer is exposed, will not seriously change its running. It becomes important, then, not only to aid the chronometer-maker in the first instance, and thus indirectly the navigator, by giving him the standard time, but to seek for some means of predicting, from observations of rate at three (or more) definite temperatures, what the rate will be at any given temperature. In the report for 1872 the following formula is proposed as the result of experience:

Let T be the temperature at which the chronometer has its maximum gaining rate; let R be this rate; let C be a constant number, which, multiplied by the square of the number of degrees from T, shows the amount of loss for that number of degrees; let $T \pm N$ be the temperature for which the rate (R^1) is required; then $R^1 = R + C \times N^2$. C and T remain constant for long periods; "as a rule they do not change as long as the adjustments of the chronometer are not altered and the instrument remains in good condition." R, however, should be determined as often as possible.

I have given a somewhat detailed account of the results so far reached at the Liverpool observatory, as I had the benefit of personally inspecting the apparatus and the records, and as the subject appears to be a most important one. The formula used by Mr. Hartnup was, so far as I know, first employed practically by Professor G. P. Bond, of Harvard College observatory, and is given in the Coast-Survey Report for 1854, in connection with the discussion of the transatlantic longitude by the transport of 145 chronometers between Mr. Hartnup's observatory at Liverpool and the Harvard College observatory. In a second series of voyages in 1855 this formula was most carefully tried, and was proved to represent closely the effect of temperature upon the rates.

This subject is now receiving attention from various public establishments in Europe, and from the naval observatory.

The French have taken a leading position in this class of inquiries ever since the publication of Lieussou's "*Recherches sur les Variations de la Marche des Chronomètres*," (1853,) and in the 10th *cahier* of the "*Recherches sur les Chronomètres*" papers, by de Magnac and Fleurais, lieutenants-de-vaisseau of the navy, seem already to have conducted to most promising results. The elaborate memoir of M. Yvon Villarceau, in the 7th volume of the "*Annales de l'Observatoire* de Paris," will long remain

as a foundation for all theoretical researches upon this subject. The *Depôt de la Marine* at Paris and a branch establishment at Toulon are devoted to the practical carrying out of these objects. In Germany, the observatories of Kiel and Hamburg, and others, have instituted most important experiments, and in the testing of various formulæ many experiments have been made, both in Germany and France, which all go to prove that on the whole the preliminary testing of chronometers on shore by suitable appliances and by proper means not only serves to detect the badly-compensated chronometers, but also enables the navigator to predict from shore-observations at various temperatures what the rate of his chronometers will be at any given temperature, at least approximately. In order that this may be done successfully it is essential that the final rates should be obtained at the seaport, and the chronometers placed on the ship with as little disturbance from transportation as possible. If they can be rated without removing them from the navigator's room an important point is gained.

The chief theoretical difficulties to be overcome are the finding of some convenient and short method (probably graphical) of applying the formulæ and the determining the *limits* within which a predicted rate is to be relied upon.

That these difficulties are capable of being overcome appears most probable.

In the *purchase* of chronometers for the English navy (and for the French services also) a most admirable plan is adopted, which is worthy of attention. Any chronometer-maker is allowed to send to the Royal Observatory at Greenwich chronometers for an annual trial. These are severely tested at various temperatures and in various positions with respect to the magnetic meridian, (a most important precaution, since some chronometer-balances have acquired a polarity by long standing in one position, and their rate is thus made to depend upon their position with respect to the magnetic meridian,) and at the end of the period of test a certificate is given to the maker. The results are printed in detail and widely circulated, and the successful chronometers are recommended for purchase by the government. In this way a healthy competition is preserved among the makers, and the government is assured of possessing the best instruments.

In France, in addition to the above system, an annual prize of 1,200 francs is decreed to the successful maker.

IV.—CONTROLLED CLOCKS, TIME-SIGNALS, AND TIME-BALLS.

The importance of furnishing correct time to vessels lying in sea-ports, to chronometer-makers and others, has led me to collate from the materials at my disposal a few notes upon the systems now adopted in various places for these purposes.

It is as complete as the somewhat meagre returns will enable me to make it, but no doubt many places which are furnished with time-signals are omitted from the list. It is valuable as showing what efforts are now making by foreign and American observatories to attain the objects in view; and also in another respect, as the extent of the various systems will show at least approximately, the estimation in which the information supplied is held by the various communities. The admirable system pursued at Greenwich, for example, is peculiarly worthy of attention, as it is of gradual growth, and the result partly of the requirements of the various communities benefited, and partly of the enlightened views of the astronomer royal, who has from time to time proposed extensions, which have been found highly desirable. The great esti-

mation in which this and similar work is held among the communities who benefit by it is a sufficient proof of its usèfulness. The peculiar advantages of a standard time will be, *in inland cities*, for the purpose of regulating the hours of business and work, the starting of railway-trains, etc. The time saved in the city of London alone, in the appointments of business men, must be enormous. In *sea-ports*, the uses to be subserved are much more important. As the chronometers of merchant-ships are usually rated by the nautical-instrument makers, who in most cases cannot themselves determine the time with proper accuracy, and who in few instances are sufficiently informed to make the best use of the imperfect instruments which they have, the giving to navigators an independent check upon them is a work of no small value, and the furnishing of time to the makers themselves a very great and positive benefit.

List of time-balls, time-signals, &c.

EUROPE.

HELSINGFORS.—A time-ball is dropped daily at noon at the observatory and a time-gun fired, either on the guard-ship or ashore.

BERGEN.—A time-ball is dropped daily at noon by the observatory.

ST. PETERSBURG.—Several public clocks in the city are controlled from the Pulkova observatory, and a time-ball (or time-gun) marks the instant of noon daily.

DANTZIG.—A time-ball is dropped at local mean noon, and one at Greenwich mean noon daily.

KIEL.—Time-ball (or time-gun) for shipping.

HAMBURG.—Time-ball (or time-gun) for shipping.

PARIS.—The public clocks are controlled from the observatory.

CHERBOURG.—A Paris mean noon is indicated by the dropping of a flat disc.

LISBON.—A time-ball is dropped from the observatory at 1^h Lisbon mean time, and one is dropped simultaneously on the south side of the river from the Prayal flag-staff.

CADIZ.—A time-ball is established at Cadiz, but I have no details regarding it.

NEUCHÂTEL.—An extensive system of electrically-controlled clocks and of time-signals radiates from this observatory, for the purpose of giving the true time to the chronometer-makers of the numerous factories, and for the general convenience of the public. The canton Vaud, adjoining the canton Neuchâtel, has asked for an extension of this system to some of its important towns.

BERNE.—I am informed that a system of time-signals is established here.

TOULON.—I am informed that standard time is provided for the use of navigators.

AFRICA.

THE CAPE OF GOOD HOPE.—There is a time-ball daily at 1^h mean time.

ALGOA BAY, (Port Elizabeth.)—A time ball at 1^h Cape of Good Hope mean time $= 23^h\ 46^m\ 5^s$ Greenwich mean time, is dropped daily.

ASIA, ETC.

MADRAS.—A time-ball is dropped daily from the custom-house at $8^h\ 20^m\ 57^s.3$ Madras civil time $= 15^h$ Greenwich mean time. The time of

the flash of the evening-gun is noted at the observatory, and published at the master-intendant's office the next day.

BATAVIA.—There is a time-ball dropped at Batavia mean noon, and also one at $1^h\ 7^m\ 12^s.5$ Batavia civil time = 18^h Greenwich time.

VLADIVOSTOK.—There is a branch of the Russian hydrographic office at this place, at which a naval officer obtains the time daily with a transit-instrument, and keeps a clock regulated for the use of navigators.

CALCUTTA.—There is a time-gun at this port.

AUSTRALIA.

MELBOURNE.—A time-ball is dropped daily (Sundays excepted) at 1^h mean time. The time is also given daily at 8^h by the obscuration of a powerful light at two minutes before 8^h; the instant of re-appearance of the light is the true time. The errors of these two signals on any day are published ont he next day in the newspapers.

ADELAIDE.—A time-signal is, I believe, established at this port.

SYDNEY.—The observatory drops a time-ball daily.

NEWCASTLE.—A time-ball is dropped by signals from Sydney.

SOUTH AMERICA.

RIO DE JANEIRO.—I have no thoroughly satisfactory data, but I am informed that a ball is dropped daily.

BUENOS AYRES.—The observatory of Cordoba sends electric signals to Rosario and Buenos Ayres for the regulation of clocks which are accessible to ship-masters.

NORTH AMERICA.

SAINT JOHNS, N. B.—There is a time-ball daily (except Sundays) at 1 o'clock. It is dropped by a chronometer, which is compared with a clock rated by a transit-instrument.

QUEBEC.—A time-ball is dropped for the shipping at 1^h, and a time-gun fired in the city for public convenience at noon.

KINGSTON.—Time is given to the city and to the shipping daily from the observatory.

ONTARIO.—For the past four years the observatory has struck its time-signals on the fire-alarm bells of the city.

BOSTON.—For some years the Harvard College observatory has controlled clocks in Boston and furnished standard time to some of the railways.

ALBANY.—It is understood that the Dudley Observatory furnishes standard time to the city and to the Hudson River Railway.

PITTSBURG.—The city-hall clock is controlled from the Allegheny observatory, and the fire-alarm bells are struck at noon and every third hour. Time is furnished to the Pennsylvania Railway.

CINCINNATI.—The clock on the city-hall is controlled by electric signals from the observatory every two seconds, and the fire-alarm bells are struck at noon.

CHICAGO.—Time is given to the city from the observatory.

WASHINGTON.—A time-ball is dropped daily (Sundays excepted) at noon. Clocks in the city are controlled (on Jones's system) at the Navy, State, and Treasury Departments, at the Signal Office, and one is proposed for erection at the Western Union Telegraph Office. The city

fire-alarm bells are struck daily (except Sundays) at 7 a.m., noon, and 6 p.m.

Daily, at noon, (excepting Sundays,) a signal is sent by the observatory (by hand, not automatically) to the Washington office of the Western Union Telegraph Office, and by them distributed over such of their wires as are unemployed. Practically, this signal reaches New York, Philadelphia, etc., nearly every week day, not more than six or seven failures to transmit to New York occurring in a year. Chicago, Cincinnati, etc., receive the signals more irregularly. San Francisco receives them only at long intervals. The signals are better distributed along the seaboard (north and south) than toward the west. The sending of this signal is not obligatory upon the telegraph company, as it is sent over their wires without compensation. In the central office in New York City, various clocks about the building are practically kept right by the signals from Washington, and time is furnished to a few chronometer-makers, etc.

PHILADELPHIA.—The Philadelphia Local Telegraph Company owns nearly all the lines in this city, and the manager of this company takes an intelligent interest in the question of public time. He has for some years supplied, at his own motion, the noon signal from Washington to various establishments in the city, and to many of the private telegraph-lines owned by merchants for the purposes of business.

GREAT BRITAIN.

LIVERPOOL.—A time-ball is dropped daily at 1^h, which is visible to the shipping; a time-gun is fired at the same hour from the Morpeth-dock pier-head, (automatically;) the public clock in the Victoria tower and various other public and private clocks are controlled by signals from the observatory.

GLASGOW.—The wire formerly owned by the observatory has been transferred to the government telegraphs, which distributes the time-signals to the public at very low rates; for example, a clock within one-third of a mile of the post-office will be controlled for £1 per year, etc.

DUN-ECHT, (near Aberdeen.)—Lord Lindsay's private observatory fires a time-gun daily for the public convenience.

EDINBURG.—A time-ball, visible to the shipping in the firth, is dropped from the top of Nelson's monument on the Calton Hill, a time-gun is fired (automatically) at the castle, and several clocks are electrically controlled, some of them being exposed for the convenience of the public. Time is sent daily to Dundee.

DUNDEE.—Signals are received daily from Greenwich and Edinburg, and a time-gun is fired (automatically) at 1^h, Greenwich mean time.

DUBLIN.—The Greenwich time-signal is received daily at 10 a. m., and distributed. I am not informed as to the details.

BELFAST.—The Greenwich signal is received at 10 a. m., and distributed.

GUERNSEY.—The Greenwich time-signal is received at 10 a. m.

NEWCASTLE.—Automatic time-gun at 1^h, Greenwich time.

SUNDERLAND.—Automatic time-gun at Greenwich 1^h.

MIDDLESBOROUGH.—Automatic time-gun at Greenwich 1^h.

KENDAL.—Automatic time-gun at Greenwich 1^h.

DEAL.—A time-ball is dropped at 1^h, automatically, from Greenwich.

START POINT AND PORTSMOUTH.—Time-balls at 1^h are proposed.

NORWICH.—Greenwich time is daily distributed.

STOCKTON.—Greenwich time is daily distributed.

WORCESTER.—Greenwich time is daily distributed.

NOTTINGHAM.—Greenwich time is daily distributed.

GREENWICH.—*Time-balls.*—A time-ball is dropped at the observatory at 1^h daily, which is plainly visible to the shipping in the Thames. A time-ball is dropped (automatically) at Deal; it has been lately proposed to drop a time-ball at Portsmouth, and the astronomer-royal suggests that one should also be established at Start Point.

Time-signals.—The current is sent hourly from Greenwich to the general post-office. This hourly current is transmitted to ten subscribers (mostly chronometer-makers) in London. The Westminster clock on the houses of Parliament, as well as the clock at the general post-office, records its errors at Greenwich electrically. The 10 a. m. current is sent *automatically* to 21 provincial towns in England, (where there are subscribers,) and to Guernsey, Edinburg, Glasgow, Dublin, and Belfast. In addition to controlling the automatic sender, this current influences a sounder, and when this is heard, the signal is sent by hand to over 600 offices in direct communication with the central one. This includes the principal railway termini. Many of these 600 offices redistribute the time-signal at 10 a. m. to the branch offices radiating from them. The 1 p. m. current is transmitted *automatically* to Newcastle, Sunderland, Middlesborough, Kendal, Hull, Norwich, Stockton, Worcester, and Nottingham. At the first four, time-guns are fired; at the others, the current either drops a time-ball, or registers itself through a galvanometer. It should be noted that the signals, as sent, are the best determinations of time possible under the circumstances, and that the final correction to the sending-clock on any day is subsequently determined with great care. So much labor is expended upon the system that the astronomer royal considers that these hourly signals "may be used for accurate determinations of longitude."

No pains are spared in the carrying out of this admirable system, and the observatory is rewarded by the very high appreciation which its labors in this direction have commanded from ship masters and owners, from the railways, and from the general public.

It should be mentioned, in connection with the time-signal system of Great Britain, that the post-office department will undertake to construct and maintain a private wire, and to furnish the Greenwich time-signals to the private-houses, &c., of subscribers at very low rates, and this system is carried out quite extensively.

I permit myself to make a few remarks upon the various systems suggested by the above data, and by the information I was able to acquire in England, in so far as they apply to the United States.

CONTROLLED CLOCKS.

The system which has been found most satisfactory abroad contemplates the establishment of controlled seconds-clocks, exposed in public places, so that from the clock-face there may at once be taken the *hour*, *minute*, and *second* of true time. Such clocks require a special wire, as, in order to be perfectly trustworthy, they should be controlled from the observatory clock by very frequent signals. It must be remembered that, in order to be valuable at all, they must be *thoroughly* trustworthy, and therefore, in this system, expensive.

It may be reasonably supposed that as fast as such clocks are really required by a community they will be applied for, either to some one of the numerous and well-equipped private observatories, or to the public observatory of the United States.

It would seem that this want may be trusted to make itself known in the future as it has in the past.

TIME-SIGNALS.

The distribution of time-signals (either with or without *controlled* clocks) to railways, etc., is a most important matter, in which the United States is far behind England, for example, where about 500 railway-stations receive a signal daily. This is partly due to the enormous extent of America in longitude, so that very different local times are used at different places of the same continuous railway-line, and partly to the fact that the telegraphs are owned by the government in England, thus rendering the execution of a general system of time-signals comparatively easy. In the opinion of many experienced and prominent railway officials, it is quite feasible and very desirable for all railways to be operated by one common time, and the first step toward this is plainly the *certainty* that the time-signals which are now regularly sent from the Naval observatory shall reach each railway-station once daily, at least. This would require contracts to be entered into with the various telegraph companies, binding them to the delivery of the signals, and probably this change, which would involve considerable expense, is not at present called for. If the want is made known, ample facilities exist at the Naval observatory, etc., for supplying it.

It should be remarked that this change, as well as the changes it would imply, and which would follow as natural consequences, is not by any means so violent as the change from the English system of measures —feet, pounds, bushels, etc.—to the metric system—metres, grammes, litres, etc.—often proposed and now partially adopted. In the latter case the *units* are altered, and for the first generation, at least, continual reference will have to be made from the old system to the new; whereas in the first case the units remain the same, and the point of reference only is changed. Once familiarize a citizen of Detroit with the fact that his local mean noon is to be called $12^h\ 24^m$, and the transition would hardly be noticed.

It has been said that the various cities, towns, etc., could be trusted to ask for such facilities in the way of standard time as they required, and that the numerous private observatories or the Naval Observatory could easily supply any want. The necessity for time-signals, time-balls, or time-guns for the benefit of navigators would be, on the other hand, a want long felt before any official and formal request for their establishment would be made.

A time-gun, if established in New York Harbor for example, would be used by a great number of vessels, which would be saved thereby the necessity of sending their chronometers to the city for rating, and thus exposing the instruments unnecessarily to the danger of a change of rate in the transportation back to the ships.

A time-gun at Hampton Roads would be used by all vessels proceeding on long voyages from Baltimore, the Potomac, and Richmond, and by the large number of ships calling at Hampton Roads for orders where to carry their cargoes. It would be particularly valuable to ships using this roadstead as a harbor of refuge on their voyages, which ships at present seldom or never wait for fair weather to rate their chronometers, but on the first appearance of settled weather slip out to sea to continue their voyages.

The absence of such time-signals has not given rise to formal requests for them, simply because the masters of ships entering any port are con-

stantly changing, and because, from the nature of their profession, little or no concerted action can be expected from them. It would be plainly an advantage not only to merchant vessels, but to ships of war, if the two signals above named could be established. If this could be *economically* done it might be considered advisable. In the case of vessels of the Navy, few are now fitted out and sail from the Washington yard. They therefore receive their chronometers from the Naval Observatory after a longer or shorter railway journey. The rates of the chronometers are thus altered by this unavoidable cause, and the advantages to the Navy which should result from the careful comparisons and tests of chronometers now made at the Naval Observatory are somewhat lessened. In order that the greatest benefit to the Navy should result from the trials of chronometers at the Naval Observatory, it is necessary that the standard time which is there daily determined should be available to navigating officers at the various ports, to aid them in getting the final rates for their chronometers before sailing. Although the navigators should also, in all cases where it is possible, rate their chronometers by their own observations, yet this is a process requiring time, and one which circumstances may render impracticable.

To do it properly, observations are required on two dates *at least* five days apart. This may not be practicable: *first*, because this entire time may be cloudy, and *second*, because the ship may be required to go to sea in the meanwhile. During a war the difficulty would be increased. A very simple and economical way has lately been suggested, by which these wants could be filled satisfactorily and cheaply. It provides:

1st. That each navy-yard on the Atlantic coast, or so many of them as it may be desirable to include in the system, should connect the office of its navigation-officer with the nearest telegraph office. This could be done at a cost of about $80 a mile, and the annual cost of maintenance is trifling. The total first cost for each navy-yard could hardly be more than $100.

2d. The noon-signal from the Naval Observatory, Washington, should be received daily by the navigation-officer at each yard by his chronometer. Its error on Washington time would thus be known, and its rate.

3d. At $0^h\ 51^m\ 47^s.88$, Washington mean time $= 6^h$ Greenwich time, a time-gun should be fired at the navy-yard by a simple electric current. If desired, a time-ball could be substituted for the gun. The annual expense of maintaining either of these would be very small, and the first cost of the ball trifling. The guns are already at hand.

By the method here proposed, which requires the signal to be made by a local battery at the yard, and not by a current from Washington, the difficulties of performing this latter operation automatically by telegraph from Washington are avoided, the expense is greatly reduced, the cost of the necessary apparatus is lessened, and the services of highly intelligent officers are enlisted, most of whom are familiar with the simple electric apparatus employed, from their previous experience at the Newport torpedo-station.

It should be understood that any error in giving the time signal should be noted in the daily papers.

4th. To the carrying out of the above programme it is *essential* that the time-signals from Washington should be transmitted daily, without the least chance of failure or interruption. A service of this sort must be absolutely unbroken, and must be executed with the most scrupulous accuracy, or it is worse than useless.

In order to this, a contract would have to be made with the telegraph

companies, binding them to transmit the noon-signal from Washington. The cost of this will be about as below:

	Yearly.
For the Norfolk yard	$313 00
For the New York yard	313 00
For the Philadelphia yard	313 00
For the Boston yard	626 00
For the Portsmouth yard	939 00

The entire cost of the experiment for one year at the New York and Norfolk navy-yards will be about $800. It is submitted that the Navy will receive the immediate benefit of this, and that incidentally, and at a trifling expense, much good can be done for vessels of the merchant service.

V.—THE BATHOMETER OF DR. C. W. SIEMENS, F. R. S., ETC.

The best description of this instrument is to be found in *Nature* for March 30, 1876, from which the following account is taken:

ON DETERMINING THE DEPTH OF THE SEA WITHOUT THE USE OF THE SOUNDING-LINE.

This is the title of a paper which has been presented to the Royal Society, and Mr. Siemens gave, at the meeting of the 24th ultimo, a description of the instrument which he has designed with this object. He commenced by giving a mathematical statement of the effect of local attraction, to a certain depth, on a body placed at the surface of the earth, assuming it to be of uniform density, spherical in form, and unaffected by centrifugal action. For small values of depth (h) this attraction is $2\pi h$. The original formula from which this is deduced is:

$$2\pi h\left(1-\frac{2}{3}\sqrt{\frac{h}{2R}}\right),$$

and by substitution of $2R$ for h in this, Newton's statement of the total attraction $\frac{4}{3}R\pi$ is obtained.

Now, if in place of the solid substance which forms the exterior crust of the earth, whose density may be taken to be the mean density of superficial rock, water, a material of less density, is substituted, it is shown that the total attraction must be diminished, and the measure of this diminution is a measure of the depth of light substance which has been substituted for heavy. If we were in possession of the exact mean density of the earth, of that of the surface-rock, and of sea-water, a scale could be calculated beforehand to show what depth would agree with a certain diminution of the measured effect of gravitation. Such an approximate calculation was made in designing the instrument, but Mr. Siemens has preferred to compare the readings of the instrument with actual soundings, in order to obtain a scale.

The instrument, which is called a bathometer, consists of the following parts: a weight, being a column of mercury affected by variation of gravitation, a counterbalance, being springs unaffected by variation of gravitation, and an arrangement by which the variations in gravitation can be read as depth in units. The column of mercury is maintained in a vertical steel tube having cup-like extensions, the lower portion being closed by a corrugated diaphragm of thin steel plate, and the upper portion containing an aperture for filling the instrument, having a screw stopper. The internal diameter of the tube is reduced at the upper portion, in order that the vertical oscillations of the mercury produced by the motion of a vessel in a sea-way may be reduced to a minimum, and the instrument is suspended in a universal joint above its center of gravity, so that it may always hang in a vertical position at sea, and is inclosed in an air-tight casing, so that it may not be under the influence of atmospheric changes. The weight of the column of mercury is balanced at the center of the diaphragm by the elasticity of the steel springs, and the *modus operandi* of the instrument is evident; as the mercury diminishes in potential through the effects of diminished attraction, the action on the springs diminishes, and these shorten upon themselves.

There are some peculiarities in the mechanical arrangement of the instrument which repay examination. Both ends being open to the air, its indications are not affected by variations of atmospheric pressure. With regard to temperature, the instrument is *parathermal.*

The description, etc., in the Catalogue of the South Kensington Exhibition, (2d edition, page 85,) should also be consulted.

By the courtesy of Dr. Siemens I was enabled to see the manuscript account of soundings taken with this instrument on board the Faraday in October and November, 1875, and in March and April, 1876. During her voyage across the Atlantic at that time frequent soundings were made with the piano-wire sounding apparatus of Sir William Thompson, and at each one of these soundings the bathometer was read by Dr. Hicks, who had it under his charge. The results are exhibited in the following table:

A.	B.	A−B.	(A−B) ÷ B.
Bathometer.	Piano-wire.	Error of bathometer.	
Fathoms.	*Fathoms.*	*Fathoms.*	*Per cent.*
201	197	+ 4	+0.020
99	100	− 1	− .010
63	54	+ 9	+ .185
82	82	0	.000
218	214	+ 4	+ .019
78	69	+ 9	+ .130
56	54	+ 2	+ .037
55	54	+ 1	+ .017
20	56	− 6	− .107
47	54	− 7	− .130
50	58	− 8	− .138
66	69	− 3	− .043
82	73	+ 9	+ .122
56	47	+ 9	+ .171
49	46	+ 3	+ .065
80	69	+ 11	+ .160
111	100	+ 11	+ .110
215	200	+ 15	+ .075
69	64	+ 5	+ .078
80	80	0	.000
86	86	0	.000
68	76	− 8	− .105
388	353	+ 35	+ .099
799	698	+101	+ .143
607	503	+104	+ .206
2,789	2,516	+273	+ .108
2,388	2,320	+ 68	+ .029
1,907	1,861	+ 46	+ .025
1,615	1,700	− 85	− .050
Mean			0.083

The following soundings were taken in March and April, 1876, by Alexander Siemens, esq., near Nova Scotia. Some sources of error had in the meanwhile been removed:

A.	B.	A − B.	(A − B) ÷ B.
90	90	0	0.000
94	92	+ 2	+ .022
95	94	+ 1	+ .011
107	101	+ 6	+ .059
105	105	0	.000
64	64	0	.000
64	61	+ 3	+ .049
56	53	+ 3	+ .057
66	68	− 2	− .030
29	27	+ 2	+ .074
43	38	+ 5	+ .132
Mean			0.039

It will be seen from the table that the mean error is a little over per cent. for the first trials, during which time the instrument (which

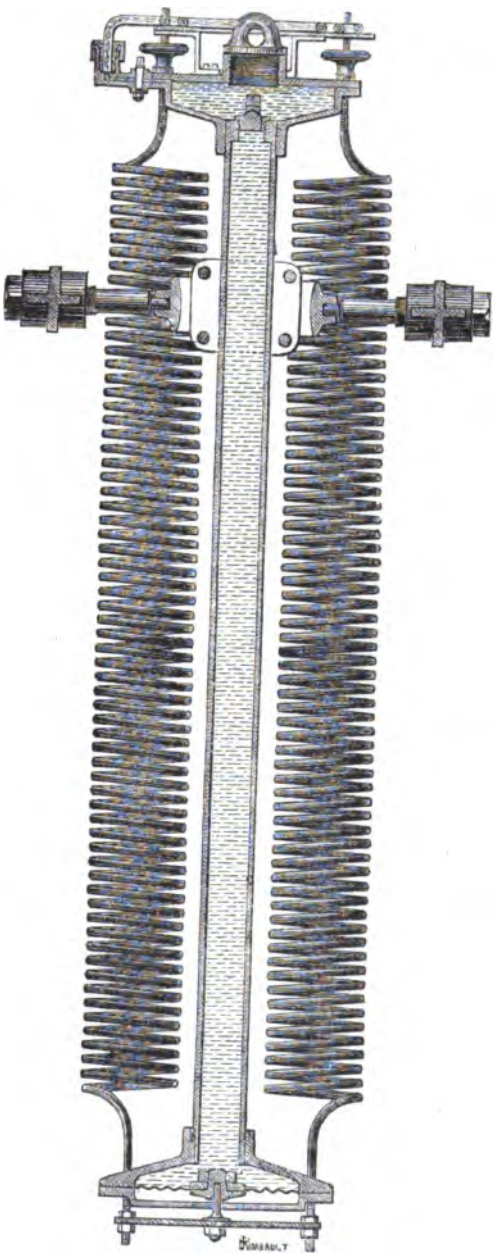

was the first of its kind) was subject to various sources of error, some of which have now been removed by better mechanical arrangements, and a few of which remain to be overcome. It will also be observed from the second part of the table that in April, 1876, after certain of these mechanical difficulties had been overcome, the percentage of error was much reduced, so that a sounding by the instrument and one by the line agreed on the average to within about *four per cent.* Dr. Siemens is now engaged in incorporating some improvements into a new instrument of this kind, and in particular in substituting for the corrugated diaphragm, which supports the column of mercury, one made of steel which is sawed through in a spiral form and covered by a sheet of India rubber.

In the trial of this first bathometer, Dr. Siemens took it to the top of the great clock-tower of the Houses of Parliament, (315 feet) and it was found to read very closely what theory demanded. It may be reasonably hoped that the mechanical difficulties, which are very great, can be so far overcome as to cause the instrument to read in the open sea within 1 or 2 per cent. of the true depth on the average. It must be remembered that the piano-wire apparatus gives the depth of water immediately below the ship, while the bathometer gives an indication of an attraction (or of a deficiency) which is the result of the depth of water for several miles in every direction. It gives the mean depth over a certain area.

A difficulty will always arise in the use of this device as a *navigating* instrument in general, as, on approaching close to the land, it will give an indication due not only to the depth of water beneath the ship, but partially due to the height of the neighboring land above the level of the sea. Thus we may expect to find *always* a reading of the instrument near the shore which will be different from what it would give in the open sea over the same depth of water, and hence, for general cruising, such an instrument will be an uncertain guide of a close approach to land. When, however, the water shoals gradually, so that the 100-fathom line is 25 to 40 miles from shore, in which case the disturbing effect of the distant land would be very small, it would indicate with great certainty the shoaling of the water, and a simple observation of the *rate* of shoaling could not fail to be of service to the navigator.

The foregoing objections would not apply, however, in a case where the instrument was placed on a packet-ship which was continually making the same voyage, as on one of the Atlantic steamers for example.

If whenever the ship's position was known the bathometer was read and the reading entered on the chart, and if after ten or twenty voyages a particular instrument was constantly seen to have the same reading when the ship was in a given position, (as it undoubtedly would,) it could not fail to be trusted as a warning and as an aid. By an experience of this kind a table of the bathometer-readings which corresponded to particular positions could be made and thoroughly tested on such a vessel, which is constantly crossing in the same track, so that after a time the reading of this particular bathometer would become an important sign of nearing a coast.

In this way, with intelligent officers who would not fail to put the necessary tests to it, it may yet be deemed suitable to serve as an important aid to navigation. Its great use will be, for the present, on board of special surveying ships, to indicate not so much the actual and absolute depths as the *changes of depth.* If, for example, a ship is engaged in making soundings with a trustworthy apparatus on board, and if it is found that a given depth by the piano-wire always corresponds very nearly to

the same reading of the instrument, (as it would,) and if this continues to be so, then a change in the reading of the bathometer would indicate to the commanding officer the passage over shoaler or deeper water, as the case might be, and it would show the necessity for a new sounding, a necessity which otherwise would be overlooked. In the hands of intelligent officers this instrument, which is now an experiment merely, may become of great value, and it is quite within reasonable expectations to hope for valuable aid from it in its perfected form.

It is understood that an instrument of this class will soon be in the possession of the Navy Department, and one has been proposed for use on H. B. M. S. Fawn, and upon the reports of the officers who have it in charge further opinions must be based.

In concluding this report, I desire to express my sense of its incompleteness, which is partially due, however, to the impossibility of presenting a large portion of my notes without a series of drawings and plans. I trust that some idea of the importance of the loan collection may be obtained from it, and of the great credit due to its originators, and to those who carried out the design in so thorough a manner.

I have the honor to be, sir,

Very respectfully,

Your obedient servant,

EDWARD S. HOLDEN,

Professor, U. S. Navy.

U. S. NAVAL OBSERVATORY, October 31, 1876.

A.—*Science and art department of the committee of council on education, South Kensington.*

* * * * * * *

ARRANGEMENT OF THE EXHIBITION.

The exhibition will consist of instruments and apparatus employed for research, and other scientific purposes, and for teaching. It will also include apparatus illustrative of the progress of science, and its application to the arts, as well as such as may possess special interest on account of the persons by whom, or the investigations in which, it had been employed. The precise limits will be found further detailed under the several sections in which the various objects have been arranged for convenience, and for the information of exhibitors, rather than as a matter of scientific classification. Models, drawings, or photographs will also be admissible where the originals cannot be sent.

The apparatus may, in certain cases, be arranged in train as used for typical investigations. And arrangements will be made, as far as it may be found practicable, for systematically explaining and illustrating the use of the apparatus in the various sections.

While every care is taken of objects lent for exhibition, the science and art department cannot be responsible for loss or damage.

The committees will have the right of rejecting any object that it may be thought inadvisable to exhibit.

The cost of carriage of all objects selected for exhibition will be defrayed by the science and art department.

It is hoped that institutions or individuals having instruments of historic interest will be good enough to lend them.

Forms on which to enter descriptions of objects offered for exhibition may be obtained on application to the director of the South Kensington Museum, London, S. W. These forms should be filled up and returned as soon as possible, so that exhibitors may receive early intimation as to the admissibility of the objects they propose to send.

The exhibition will open on the 1st April, 1876, and will remain open until the end of September, after which time the objects will be returned to the owners.

ARITHMETIC.

Apparatus for teaching arithmetic; calculating-machines; instruments for solving equations; slide rules—numbering and enumerating apparatus, &c.

GEOMETRY.

Instruments used in geometrical drawing; methods of copying; pantagraph, micrograph; Peaucellier's cell and parallel motion; machines for description of curves and specimens of the curves they describe, including geometric turning; instruments for giving graphic representations of phenomena; models to illustrate descriptive geometry; specimens to illustrate the process of making models according to a design; models to illustrate solid geometry, perspective, crystallography, &c.; stereoscopic illustrations of solid geometry.

MEASUREMENT.

Of length.—Standard yard, meter, &c.; comparator for standards of length, (sight and touch;) gauges, measuring-wheels, steel tapes, &c.; micrometers and verniers; cathetometers.

Of area.—Planimeters, &c.

Of volume.—Standard gallon, liter, &c.; pipettes, burettes. Meters for gas, water, &c.

Of angles.—Divided circles, theodolites, clinometers, goniometers, &c.

Of mass.—Standard pound, kilogramme, &c.; vacuum and other balances.

Of density.—Specific-gravity bottles, areometers, &c.

Of time.—Clocks and pendulums, chronometers, watches, and balance-wheels; tuning-forks for measuring small intervals of time; chronographs.

Of velocity.—Such as Morin's machine; strophometers, current meters, ships' logs, &c.

Of momentum.—Ballistic apparatus.

Of force.—Spring balances, pressure gauges, torsion balances, &c.

Of work.—Indicators, dynamometers, &c.

KINEMATICS, STATICS, AND DYNAMICS.

Elementary illustration; position and displacement of a point, a rigid body, or a material system; composition and resolution of displacements; velocity and acceleration, their composition and resolution; displacements of a connected system; principles of mechanism; rolling contact, sliding contact, belting, link connections, shafting, universal joints, &c.; transmission of work; relation between the displacement of two pieces of a machine and the forces which they transmit; the mechanical powers; instruments for illustrating the laws of motion, such as pendulums, gyroscopes, dynamical tops.

Laws of fluid pressure; stability of floating bodies.

Discharge of fluids through orifices, and their motion in channels.

Hydraulic and pneumatic transmission of power.

MOLECULAR PHYSICS.

Instruments and apparatus employed in teaching, and in the investigations and observations connected with:

Pressure on matter.—Tension, compression, (piezometer,) torsion, flexion; relation of volume to pressure; elasticity of liquids and gases; hardness, (of solids and liquids,) toughness, brittleness, malleability, &c.

Communication of pressure through fluids.—Pressure of air, its consequences and applications; barometers, air-pumps, siphons, suction-pumps, spirators, &c.; pressure of water, its consequences and applications; levels, side pressure, &c.

Density.—Methods of measuring densities of gases, vapors, liquids, solids.

Adhesion and cohesion.—Condensation of gases in solids, solution of gases in liquids; mixing of gases with gases, (diffusion, transpiration, &c.,) absorption of liquids by solids, (capillarity, &c.,) absorption of liquids by gases, (evaporation, &c.,) mixing of liquids with liquids, (osmose, diffusion dialysis.) Evaporation of solids, solution of solids, mixture of solids with solids, (cementation, &c.)

SOUND.

Instruments and apparatus employed in teaching, and in the investigations and observations connected with:

Geometrical, mechanical, and optical methods of illustrating the laws of wave-motion.—Progressive waves, composition of vibrations, interference, stationary waves.

Generation of sound.—Fog-horn, &c.

Conduction of sound.—Through solids, liquids, and gases, stethoscopes.

Velocity of sound.

Detection of sound.—Sensitive flame, &c.

Reflection and refraction.—Ear-trumpets, acoustic lenses, &c.

Dispersion and absorption.

Musical sounds.—Pitch, standards of pitch, standard tuning-forks, &c.; methods of measuring and comparing rates of vibration; toothed wheels, syrens, &c.; vibration microscopes, &c.; methods of illustrating the nature of musical intervals; manometric flames, mirrored tuning-forks, &c.

Musical quality.—Illustrations of the different quality of the sounds of various instruments, harmonics, and overtones, resultant tones, instruments for studying quality. Resonators, phonautographs, &c.

Musical instruments illustrating the above.—Methods of exhibiting the mode of vibration of various instruments and the quality of the sounds yielded by them.

LIGHT.

Instruments and apparatus employed in teaching, and in the investigations and observations connected with:

Production.—Combustion, electric discharge, &c.

Measurement of intensity, velocity,

Action of matter on light.—Reflection, refraction, dispersion, achromatism, direct vision prisms, polarization, absorption, (color,) fluorescence, &c.

Action of light on light.—Interference, diffraction, measurement of wave length, (optical banks,) &c.

Action of light on matter.—Photography, radiometry, phosphorescence, &c.

Technical applications of optical principles.—Light-house, illumination, &c.

HEAT.

Instruments and apparatus employed in teaching, and in the investigations and observations connected with:

Sources of heat.—Chemical, electrical, dynamical, solar, calorescence, &c.

Effects of heat on matter.—Changes of temperature, expansion, and change of elasticity, liquefaction, vaporization, &c.

Measurement of temperature.—Thermometers, pyrometers, &c.

Propagation of heat.—Radiant heat—radiometer, reflection, refraction, radiation, absorption, polarization; conduction—solids, liquids, gases; convection—ventilation, &c.

Effect of change of molecular state on temperature.—Freezing-mixtures, ice-machines, &c.

Effect of change of pressure and volume.

Heat quantity.—Unit of heat, calorimeters, specific heat, &c. Methods of determining latent heat.

Mechanical equivalent of heat.—Methods of determining. Illustrations of thermodynamics.

Electrical equivalent of heat.—Methods of determining.

Analysis of solar radiation.

MAGNETISM.

Instruments and apparatus employed in teaching, and in the investigations and observations connected with:

Natural magnets.

Permanent artificial magnets.

Electro-magnets.

Methods of magnetization.—Effects of magnetization. Conditions affecting intensity of magnetization: Temperature, (chemical,) composition, strains, &c.

Magnetic induction of all substances.—Diamagnetism.

Measurement of intensity of magnetization, magnetic moment.

Terrestrial magnetism.—Instruments for observation and automatic registration of the magnetic elements.

ELECTRICITY.

Instruments and apparatus employed in teaching, and in the investigations and observations connected with:

Production and maintenance of difference of potential.—Electrical machines acting by friction, induction, (doublers, replenishers, &c., Holz's and Töppler's machines, &c.;) galvanic batteries; thermo-electric piles; magneto-electric machines. Other sources, such as pyro-electricity, pressure electricity, cleavage, capillarity, osmose, &c.

Detection and measurement of difference of potential.—Electroscopes, electrometers, standards of electro-motive force, methods of comparison.

Accumulation of electricity.—Insulators, condensers, accumulators, effects due to accumulated electricity, distribution on conductors, polarization of dielectrics, &c.

Measurement of electric quantity.—Torsion balances, standard accumulators, methods of comparing electric capacities and dielectric co-efficients.

Detection and measurement of electric currents.—Galvanoscopes, galvanometers, voltameters, electro-dynamometers, &c.

Resistance.—Standards of resistance, methods of comparing resistances, methods of establishing absolute standards, (British Association unit apparatus.)

Effects of electric currents.—Production of light, heat, electrolysis, electro-diffusion. Action on magnets, soft iron, (electro-magnets,) action of currents on currents.

Technical application of electricity.—Electric telegraph, &c.

ASTRONOMY.

Star-maps, catalogues, globes, orreries, &c.
Meridian instruments.
Arrangements for communicating true time.
Altazimuths, zenith-sectors, sextants, &c.
Equatorial telescopes, { Reflectors. Refractors.
Micrometers.
Driving-clocks.
Special arrangements for—
  Celestial photography.
  Spectroscopic observations.
  Thermo-electric observations.
Siderostats.

APPLIED MECHANICS.

As the exhibition must be regarded as chiefly referring to education, research, and other scientific purposes, it must in this division consist principally of models, diagrams, mechanical drawings, and small machines, illustrative of the principles and progress of mechanical science, and of the application of mechanics to the arts.

Properties of materials.
Structures at rest and in motion.
Prime movers.
Reservoirs of energy.
Regulators.
The application of the principles of mechanics to machinery as used in the arts.
Shipping, naval architecture, and marine engineering.

CHEMISTRY.

Scientific instruments, apparatus, and materials employed in the investigation and teaching of chemical science, and in the application of its principles to scientific purposes.

Diagrams and models.
Illustrations of analytical results.
Specimens of chemicals—(*a*) organic, (*b*) mineral.
Apparatus and fittings for laboratory and lectures.
Apparatus for gravimetric and volumetric operations.
Apparatus for distillation and filtration.
Apparatus for operations by the dry or hot method, such as furnace, blow-pipe, &c.
Refrigeratory apparatus.
Apparatus for spectrum analysis.

NOTE.—Operations of the following nature may be illustrated, viz:

Organic analysis.
Mineral analysis.
Electrolysis.
Water analysis.
Gas analysis.
Spectrum analysis.
Methods of investigation connected with vegetation and respiration.

METEOROLOGY.

Thermometers and barometers, of special construction.
Anemometers, rain-gauges, hydrometers, &c.
Self-recording meteorological apparatus.
Illustrations of various systems of storm-signals.
Weather-maps.
Instruments illustrating the phenomena of atmospheric electricity.
Instrument-stands.

GEOGRAPHY.

Instruments used in surveying.
Instruments used in geodesy and hydrography, including hypsometrical instruments, tide-gauges, &c.
Projections, maps, charts, models, and globes.
Deep-sea sounding apparatus. Seismographical instruments.

GEOLOGY AND MINING.

Instruments for field and underground surveying,
Typical collections of rock-specimens, including vein-stones.
Typical fossils arranged stratigraphically.
Maps in different stages, and finished maps.
Geological models, horizontal and vertical sections.
Diagrams and plates of fossils, and general geological diagrams used in lecture-rooms.
Microscopic sections of rocks and minerals, and apparatus for cutting such sections.
Anemometers, water-gauges, mining-barometers, and thermometers.
Mining plans, sections and models of workings.

MINERALOGY, CRYSTALLOGRAPHY, &C.

Goniometers.
Apparatus for studying and exhibiting the optical characters of crystals.
Sections for optical examination.
Blow-pipe and other portable apparatus for determining minerals.
Collections of crystals, models of crystals, plates of crystals, and apparatus for drawing them.
Educational collections of minerals, &c.
Diagrams and models for lecture-rooms,

BIOLOGY.

1. Microscopes with accessary apparatus for biological research, &c.
2. Physiological apparatus for investigating—
   a. The growth and mechanical movements of living organisms and their parts.
   b. The chemical phenomena of living organisms.
   c. The electrical phenomena of living organisms.
   d. The functions of the nervous and other systems.
3. Apparatus for anatomical research.
4. Apparatus for collecting and preserving objects of natural history.
5. Appliances for teaching biology.

A limited number of examples illustrating the performances of the apparatus will be admissible.

Science and art department of the committee of council on education—Loan collection of scientific apparatus, South Kensington Museum—Apparatus in action, explanations, &c.

PROGRAMME FOR THE WEEK ENDING SATURDAY, JULY 8, 1876.

EVERY DAY.

10 a. m. to 1 p. m.; 2 p. m. to 4 p. m.—The "Times" composing and type-casting machines at work, room F; Pictet's ice-making machine at work in engine-house, room F.

MONDAY.

12 noon.—Faija's motometer, room H.
3 p m.—Sir J. Whitworth's measuring-machine and testing-machine, room H; musical instruments, room Q.
4 p. m.—Bosanquet's enharmonic harmonium, room Q; Holmes's fog-horns, room E; Zanni's telegraphic apparatus, room F.
5 p. m.—Warden, Clarke and Muirhead's electric apparatus, room F.
7.30 p. m.—Post-office telegraphic apparatus, room F.
8 p. m. to 9 p. m.—Little Basses Rock light-house lighted, outside room K.
8 p. m.—Lecture by the Right Hon. Lyon Playfair, C. B., M. P., F. R. S., on "Air and airs, as illustrated by the Magdeburg hemispheres and Black's and Cavendish's balances."

TUESDAY.

11 a. m. to 4 p. m.—M. Wiesnegg's furnaces, &c., laboratory adjoining room G.
2.30 p. m.—Lowne's ventilation anemometer, (Dr. Mann,) room G.
3 p. m.—Spectrum of electric light, room F; Stanley's pantographs, room G.
4 p. m.—Mr. Bonomi's apparatus for the identification of men, room M.
5 p. m.—Instruments lent by metorological office explained, room L.
6.30 p. m.—Mr. Etler's electric machine, conference room.
7 p. m.—Tisley and Spiller's pendulum-apparatus, room H.
7.30 p. m.—Post-office telegraphic apparatus, room F.
8 p. m. to 9 p. m.—Little Basses Rock light-house lighted, outside room K.

WEDNESDAY.

11 a. m. to 4 p. m.—M. Wiesnegg's furnaces, &c., laboratory adjoining room G.
3 p. m.—Magnetic observatory outside room K; Poole's chronometers, room K.
5 p. m.—Shand and Mason's fire-engine models, room C.

THURSDAY.

3 p. m.—Major Ross's blow-pipe apparatus.
4 p. m.—Holmes's fog-horns, room E.

FRIDAY.

11 a. m.—Tisley and Spiller's pendulum-apparatus, room H.
4 p. m.—Mr. Skertchley's evaporimeter, room L.

SATURDAY.

2 p. m.—Edmund Wheeler's microscopes, &c., room N.
2.30 p. m.—Mr. Laslett's metroscope, room L.
3.30 p. m.—Mr. W. Groves's chronograph, room K.
4 p. m.—Instruments used by geographical travelers, room L.
4.30 p. m.—Mr. Perigal's kinematic models, room H.
5.30 p. m.—Siemens's bathometer and attraction meter, room H.
8 to 9 p. m.—Little Basses Rock light-house lighted, outside room K.
8 p. m.—Lecture by Dr. Gladstone on "The work of Davy and Faraday, as illustrated by the apparatus lent by the Royal Institution."

PROGRAMME FOR THE WEEK ENDING SATURDAY JULY 15, 1876.

EVERY DAY.

10 a. m. to 1 p. m.; 2 p. m. to 4 p. m.—The "Times" composing and type-casting machines at work, room F; Pictet's ice-making machine at work in engine-house, room F.

MONDAY.

10 a. m.—Lecture to science-teachers in science-schools, lecture-theater.
3 p. m.—Sir J. Whitworth's measuring-machine and testing-machine, room H.; Musical instruments, room Q.
4 p. m.—Bosanquet's enharmonic harmonium, room Q; Holmes's fog-horns, room E; Lecture to science-teachers, by Mr. Merrifield, F. R. S., "Measurements, linear and surface," in the lecture-theater, South Kensington Museum.
5 p. m.—Instruments lent by meteorological office explained, room L.
7.30 p. m.—Post-office telegraphic apparatus, room F.
8 p. m. to 9. p. m.—Little Basses Rock light-house lighted, outside room K.
8 p. m.—Lecture by the Rev. R. Main, M. A., F. R. S., on "The instrumental foundations of practical astronomy," conference-room.

TUESDAY.

10 a. m.—Lecture to science-teachers, by Mr. W. Spottiswoode, F. R. S., on "Optical instrument employed in the polarization of light."
3 p. m.—Spectrum of electric light, room F; Lieut. Gen. W. Smith's point-finder, room G.
4 p. m.—Lecture to science-teachers, by Mr. Merrifield, F. R. S., on "Measurements, linear and surface;" Sugg's photometer, landing of south staircase.
6.30 p. m.—Mr. Etler's electric machine, conference-room.
7 p. m.—Tisley and Spiller's pendulum-apparatus, room H.
8 p. m. to 9 p. m.—Little Basses Rock light-house lighted, outside room K.
8 p. m.—Lecture by Prof. Francis Guthrie, "Heat and work," conference-room.

WEDNESDAY.

10 a. m.—Lecture to science-teachers, by Professor Roscoe, F. R. S, "Technical chemistry," lecture-theater, science-schools.
2.30 p. m.—George's ventilating stove, (Doctor Mann,) laboratory adjoining room G.
3 p. m.—Magnetic observatory, outside room K.
4 p. m.—Lecture to science-teachers, by J. Norman Lockyer, F. R. S., "Spectroscopes," lecture-theater, South Kensington Museum.

THURSDAY.

10 a. m.—Lecture to science-teachers, by Professor Roscoe, B. A., F. R. S., "Technical chemistry," lecture-theater, science-schools.
3 p. m.—Major Ross's blowpipe apparatus, laboratory adjoining room G.
4 p. m.—Holmes's fog-horns, room E; lecture to science-teachers, by J. Norman Lockyer, F. R. S., "Spectroscopes," lecture-theater, South Kensington Museum.

FRIDAY.

10 a. m.—Lecture to science-teachers, by Professor Stokes, F. R. S., on "Fluorescence," lecture-theater, science-schools.
11 a. m.—Tisley and Spiller's pendulum apparatus, room H.
4 p. m.—Lecture to science-teachers, by Prof. E. Ray Lankester, on "Mocroscopic investigation," conference-room.

SATURDAY.

2.30 p. m.—Mr. Laslett's metroscope, room L.
4 p. m.—Admiralty charts, room M.
5.30 p. m.—Siemens' bathometer and attraction meter, room H.

8 to 9 p. m.—Little Basses Rock light-house lighted, outside room K.
8 p. m.—Lecture by Dr. W. H. Stone, on "Modes of eliciting and re-enforcing sound, conference-room.

PROGRAMME FOR THE WEEK ENDING SATURDAY JULY 22, 1876.

EVERY DAY.

10 a. m. to 1 p. m.; 2 p. m. to 4 p. m.—The "Times'" composing and type-casting machine at work, room F; Pictet's ice-making machine at work in engine-house, room F.

MONDAY.

10 a. m.—Lecture to science-teachers, by Captain Abney, R. E., F. R. S., on "Photography," lecture-theater, South Kensington Museum.
12 noon.—Barlow's patent motometer, (Mr. Faija,) room H.
3 p. m.—Sir J. Whitworth's measuring-machine and testing-machine, room H; musical instruments, room Q.
4 p. m.—Bosanquet's enharmonic harmonium, room Q; Holmes's fog-horns, room E; lecture to science-teachers, by Mr. H. Dent Gardner, on "Time Measures," lecture-theater, science-schools.
5 p. m.—Aveling and Porter's road-locomotive, room C.
7.30 p. m.—Post-office telegraph-apparatus, room F.
8 p. m. to 9 p. m.—Little Basses Rock light-house lighted, outside room K.
8. p. m.—Lecture by Mr. C. V. Walker, F. R. S., on "Galvanic Time Signals," conference-room.

TUESDAY.

10 a. m.—Lecture to science-teachers by Captain Abney, R. E., F. R. S., on "Photography," lecture-theater, South Kensington Museum.
2.30 p. m.—George's ventilating-stove, laboratory adjoining room G.
3 p. m.—Spectrum of electric-light, room F.
4 p. m.—Lecture to science-teachers, by Mr. H. Dent Gardner, on "Time Measures," lecture-theater, science-schools; Sugg's photometer, landing of south staircase.
6.30 p. m.—Mr. Etler's electric-machine, conference-room.
7 p. m.—Tisley and Spiller's pendulum apparatus, room H.
8 p. m. to 9 p. m.—Little Basses Rock light-house lighted, outside room K.
8 p. m.—Lecture by the right honorable the Earl of Rosse, F. R. S., on "The Construction of Reflecting Telescopes and their relative advantages as compared with Refractors," conference-room.

WEDNESDAY.

10 a. m.—Lecture to science-teachers, by Professor Williamson, Ph. D., F. R. S., on "Metallurgical Processes," conference-room.
3 p. m.—Magnetic-observatory, outside room K.
4 p. m.—Lecture to science-teachers, by Mr. A. B. Kempe, on "Link Motions," conference-room.

THURSDAY.

10 a. m.—Lecture to science-teachers, by Professor Williamson, Ph. D., F. R. S., on "Metallurgical Processes," conference-room.
3 p. m.—Major Ross's blowpipe apparatus, laboratory adjoining room G.
4 p. m.—Holmes's fog-horns, room E; lecture to science-teachers by Prof. T. F. Pigot, on "Geometrical and Engineering Drawing," conference-room.

FRIDAY.

10 a. m.—Lecture to science-teachers, by Prof. G. Carey Foster, B. A., F. R. S, on "Electric Measurements," conference-room.
11 a. m.—Tisley and Spiller's pendulum apparatus, room H.
4 p. m.—Lecture to science-teachers, by Prof. T. F. Pigot, on "Geometrical and Engineering Drawing," conference-room.

SATURDAY.

7 p. m.—Specimens of glass with metals fused into them by lightning, room F.
8 to 9 p. m.—Little Basses Rock light-house lighted, outside room K.
8 p. m.—Lecture by Mr. W. Chandler Roberts, F. R. S., on "Graham's Apparatus," conference-room.

PROGRAMME FOR THE WEEK ENDING SATURDAY JULY 29, 1876.

EVERY DAY.

10 a. m. to 1 p. m.; 2 p. m. to 4 p. m.—The "Times" composing and type-casting machines at work, room F; Pictet's ice-making machine at work in engine-house, room F.

MONDAY.

10 a. m.—Lecture to science-teachers, by Dr. W. H. Stone, on "Instruments for experiments on sound," lecture-theater, South Kensington Museum.

3 p. m.—Sir J. Whitworth's measuring-machine and testing-machine, room H; musical instruments, room Q.

4 p. m.—Bosanquet's enharmonic harmonium, room Q; Holmes's fog-horns, room E; lecture to science-teachers by Prof. J. P. O'Reilly, on "Apparatus for mining-surveying," lecture-theater, science-schools.

5 p. m.—Hayward Tyler and Co.'s "Universal" steam-pumps, room C.

7.30 p. m.—Post-Office telegraphic apparatus, room F.

8 p. m. to 9 p. m.—Little Basses Rock light-house lighted, outside room K.

8 p. m.—Lecture by Mr. J. N. Douglas, "The light-houses on the Great and Little Basses Rocks, Ceylon," conference-room.

TUESDAY.

10 a. m.—Lecture to science-teachers, by Dr. W. H. Stone, on "Musical instruments and Temperaments," lecture-theater, South Kensington Museum.

2.30 p. m.—George's ventilating stove, laboratory adjoining room G.

3 p. m.—Explanation of Russian instruments, room F; spectrum of electric light, room F.

4 p. m.—Lecture to science-teachers, by Prof. J. P. O'Reilly, on "Apparatus for mining-surveying," lecture-theater, science schools; Sugg's photometer, landing of south staircase.

6.30 p. m.—Mr. Etler's electric machine, conference-room.

7 p. m.—Tisley and Spiller's pendulum apparatus, room H.

8 p. m. to 9 p. m.—Little Basses Rock light-house lighted, outside room K.

8. p. m.—Lecture by Prof. N. J. Maskelyne, F. R. S., "What is a crystal? Answers drawn from the loan collection," conference-room.

WEDNESDAY.

10 a. m.—Lecture to science-teachers, by Prof. G. Carey Foster, B. A., F. R. S., on "Electric measurement," conference-room.

3 p. m.—Magnetic observatory, outside room K.

4 p. m.—Lecture to science-teachers by Professor Flower, F. R. S., on "Museum specimens for teaching purposes," conference-room.

THURSDAY.

10 a. m.—Lecture to science-teachers, by Dr. Siemen's, F. R. S., on "Measurement of density, bathometer," &c., conference room.

12 noon.—Demonstration by Sir J. Whitworth of his apparatus.

3 p. m.—Major Ross's blowpipe apparatus, laboratory adjoining room G.

4 p. m.—Holmes's fog-horns, room E; lecture to science-teachers by Mr. Baillie Hamilton, on "New musical instruments," conference-room.

FRIDAY.

10 a. m.—Lecture to science-teachers, by Prof. Story Maskelyne, M. A., F. R. S., on "Mineralogical apparatus," conference-room.

11 a. m.—Tisley and Spiller's pendulum apparatus, room H.

4 p. m.—Lecture to science-teachers by Dr. Huggins, F. R. S., "The spectroscope applied to astronomy," lecture-theater, science-schools.

SATURDAY.

8 to 9 p. m.—Little Basses Rock light-house lighted, outside room K.

8 p. m.—Lecture by Captain Davis, R. N., on "Arctic discoveries as illustrated by the maps and charts in the collection."

PROGRAMME FOR THE WEEK ENDING SATURDAY, AUGUST 5, 1876.

EVERY DAY.

10 a. m. to 1 p. m.; 2. p. m. to 4 p. m.—The "Times" composing and type-casting machines at work, room F; Pictet's ice-making machine at work in engine-house, room F.

MONDAY.

10 a. m.—Lecture to science-teachers, by Professor Michael Foster, M. D., F. R. S., "Use of lecture experiments in biological teaching," lecture-theater, science-school.

2 p. m. to 5 p. m.—The magneto-electric machine, by Gramme, and the electric light, room F.

3 p. m.—Sir J. Whitworth's measuring-machine and testing-machine, room H.; musical instruments, room Q.
4 p. m.—Holmes's fog-horns, room E; lecture to science-teachers, by Mr. W. Chandler Roberts, F. R. S., "Graham's researches," lecture-theater, science-schools.
7.30 p. m.— Post-office telegraphic apparatus, room F.
8 p. m. to 9 p. m.—Little Basses Rock light-house lighted, outside room K.
8 p. m.—Lecture by Professor G. Carey Foster, F. R. S., "Electricity as a motive power," conference-room.

TUESDAY.

10 a. m.—Lecture to science-teachers, by Major Wilson, R. E., F. R. S., "Surveying instruments," lecture-theater, South Kensington Museum.
2.30 p. m.—Lightning-conductors, (Dr. Mann,) room F.
3 p. m.—Spectrum of electric light, room F.
4 p. m.—Sugg's photometer, landing of south staircase.
7 p. m.—Tisley and Spiller's pendulum apparatus, room H.
8 p. m. to 9 p. m.—Little Basses Rock light-house lighted, outside room K.

WEDNESDAY.

10 a. m.—Lecture to science-teachers, by Major Wilson, R. E., F. R. S., "Surveying instruments," conference-room.

3 p. m.—Magnetic observatory, outside room K.
4 p. m.—Lecture to science-teachers by Mr. R. H. Scott, M. A., F. R. S., "Meteorological apparatus," conference-room.

THURSDAY.

10 a. m.—Lecture to science-teachers, by Professor Burdon Sanderson, M. D., LL. D., F. R. S., "Recording instruments," conference-room.
2 p. m. to 5 p. m.—The magneto-electric machine, by Gramme, and the electric light, room F.
4 p. m.—Holmes's fog-horns, room E.
Lecture to science-teachers, by Mr. R. H. Scott, M. A., F. R. S., "Meteorological apparatus," conference-room.

FRIDAY.

10 a. m.—Lecture to science-teachers, by Dr. Lauder Brunton, F. R. S., "Apparatus for physiological chemistry," conference-room.
11 a. m.—Tisley and Spiller's pendulum apparatus, room H.
4 p. m.—Lecture to science-teachers, by Mr. Vines, B. A., "Apparatus for vegetable physiology," conference-room.

SATURDAY.

3 p. m.—Mr. Pichler's instruments for illustrating harmony and discord, room Q.
8 to 9 p. m.—Little Basses Rock light-house lighted, outside room K.
8 p. m.—Lecture by Capt. J. E. Davis, R. N., F. R. G. S., on "Antarctic discoveries as illustrated by the maps and charts in the collection," conference-room.

PROGRAMME FOR THE WEEK ENDING SATURDAY, AUGUST 12, 1876.

EVERY DAY.

10 a. m. to 1 p. m.; 2 p. m. to 4 p. m.—The "Times" composing and type-casting machine at work, room F; Pictet's ice-making machine at work in engine-house, room F.

MONDAY.

10 a. m.—Lecture to science-teachers, by Professor Goodeve, M. A., "End measurement," lecture-theater, science-schools.
12 noon.—Barlow's patent motometer, (Mr. Faija,) room F.
2 p. m. to 5 p. m.—The Gramme magneto-electric machine and the electric light, room F.
3 p. m.—Sir J. Whitworth's measuring-machine and testing-machine, room H, musical instruments, room Q.
4 p. m.—Holmes's fog-horns, room E; lecture to science-teachers, by Professor Ball, LL. D., F. R. S., "Astronomical instruments," lecture-theater, South Kensington Museum.
7.30 p. m.—Post-office telegraphic apparatus, room F.
8 p. m. to 9 p. m.—Little Basses Rock light-house lighted, outside room K.
8 p. m.—Lecture by Prof. Herbert McLeod, "Some properties of gases," conference-room.

TUESDAY.

10 a. m.—Lecture to science-teachers, by Professor Goodeve, M. A., "Conversion of motion," lecture-theater, science-schools.

2.30 p. m.—Solid-flame burners, (Dr. Mann,) laboratory adjoining room G.
3 p. m.—Spectrum of electric light, room F.
4 p. m.—Sugg's photometer, landing of south staircase; lecture to science-teachers, by Professor Ball, LL. D., F. R. S., "Astronomical instruments," conference-room.
7 p. m.—Tisley and Spiller's pendulum apparatus, room H.
8 p. m. to 9 p. m.—Little Basses Rock light-house lighted, outside room K.

WEDNESDAY.

10 a. m.—Lecture to science-teachers, by Professor Goodeve, M. A., "Illustrations of applied mechanics," lecture-theater, science-schools.
3 p. m.—Magnetic observatory, outside room K.
4 p. m.—Lecture to science-teachers, by Professor Ball, LL. D., F. R. S., "Calculating machines," conference-room.

THURSDAY.

10 a. m.—Lecture to science-teachers, by Mr. Sorby, F. R. S., "Microscopes," conference-room.
2 p. m. to 5 p. m.—The Gramme magneto-electric machine and the electric light, room F.
4 p. m.—Holmes's fog-horns, room E; lecture to science-teachers, by Mr. Bottomley, "Electrometers," conference-room.

FRIDAY.

10 a. m.—Lecture to science-teachers, by Dr. H. E. Armstrong, "Organic chemistry," conference-room.
11 a. m.—Tisley and Spiller's pendulum apparatus, room H.
4 p. m.—Lecture to science-teachers, by Mr. Bottomley, "Electrometers," conference-room.

SATURDAY.

3 p. m.—Mr. Pichler's instruments for illustrating harmony and discord, room Q.
5 p. m.—M'Kay's patent equilibrium drill, room C.
8 to 9 p. m.—Little Basses Rock light-house lighted, outside room K.
8 p. m.—Lecture by Mr. W. S. Mitchell, M. A., "The rise of stratigraphical geology in England and some of its practical results," conference-room.

PROGRAMME FOR THE WEEK ENDING SATURDAY, AUGUST 19, 1876.

EVERY DAY.

10 a. m. to 1 p. m.; 2 p. m. to 4 p. m.—The "Times" composing and type-casting machine at work, room F; Pictet's ice-making machine at work in engine-house, room F.

MONDAY.

10 a. m.—Lecture to science-teachers, by Professor Barrett, "Simple apparatus for teaching physics," lecture-theater, science-schools.
3 p. m.—Sir J. Whitworth's measuring-machine and testing-machine, room H; musical instruments, room Q.
4 p. m.—Lecture to science-teachers, by Professor Geikie, F. R. S., "Geological maps and apparatus for surveying," lecture-theater, South Kensington Museum.
7.30 p. m.—Post-office telegraphic apparatus, room F.
8 p. m. to 9 p. m.—Little Basses Rock light-house lighted, outside room K.
8 p. m.—Lecture by Mr. W. J. Harrison, F. G. S., on the "Study of Local Geology with Illustrations from Leicestershire," conference-room.

TUESDAY.

10 a. m.—Lecture to science-teachers, by Prof. George Forbes, "Thermo-dynamics, specific and latent heat," lecture-theater, science-schools.
2.30 p. m.—Lowne's ventilation anemometer, (Dr. Mann,) laboratory adjoining room G.
4 p. m.—Sugg's photometer, landing of south staircase; lecture to science-teachers, by Professor Geikie, F. R. S., "Geological maps and apparatus for surveying," conference-room.
7 p. m.—Tisley and Spiller's pendulum apparatus, room H.
8 p. m. to 9 p. m.—Little Basses Rock light-house lighted, outside room K; lecture by Prof. E. Hull, F. R. S., "The physical geology of Ireland as compared with that of England," conference-room.

WEDNESDAY.

10 a. m.—Lecture to science-teachers, by Professor Kennedy, C. E., "Kinematical models," conference-room.
3 p. m.—Magnetic observatory, outside room K.

4 p. m.—Lecture to science-teachers, by Mr. Froude, M. A., F. R. S., "The laws of fluid resistance as they affect ships," conference-room.

THURSDAY.

10 a. m.—Lecture to science-teachers, by Professor Kennedy, C. E., "Kinematical models," conference-room.
4 p. m.—Lecture to science-teachers, by Mr. Froude, M. A., F. R. S., "Propulsion of ships," conference-room.

FRIDAY.

10 a. m.—Lecture to science-teachers, by Professor Barrett, "Sources of electricity," lecture-theater, science-schools.
11 a. m.—Tisley and Spiller's pendulum apparatus, room H.
4 p. m.—Lecture to science-teachers, by Prof. George Forbes," "Conduction of heat," conference-room.

SATURDAY.

3 p. m.—Mr. Pichler's instruments for illustrating harmony and discord, room Q; Major Ross's blowpipe apparatus, laboratory adjoining room G.
6 p. m.—Mr. Etler's electric machine, conference-room.
8 to 9 p. m.—Little Basses Rock light-house lighted, outside room K.
8 p. m.—Lecture by Prof. W. F. Barrett, "Experiments illustrating the analogy between light and sound."

PROGRAMME FOR THE WEEK ENDING SATURDAY, AUGUST 26, 1876.

EVERY DAY.

10 a. m. to 1 p. m., 2 p. m. to 4 p. m.—The "Times" composing and type-casting machines at work, room F; Pictet's ice-making machine at work, in engine-house, room F.

MONDAY.

12 noon.—Barlow's patent motometer, (Mr. Faija,) room F.
3 p. m.—Sir J. Whitworth's measuring-machine and testing-machine, room H; musical instruments, room Q.
7.30 p. m.—Post-office telegraphic apparatus, room F.
8 p. m. to 9 p. m.—Little Basses Rock light-house lighted, outside room K.
8 p. m.—Lecture by Mr. W. Spottiswoode, F. R. S., "Experimental illustrations of polarized light," Lecture Theatre, South Kensington Museum.

TUESDAY.

2.30 p. m.—George's ventilating stove, laboratory adjoining room G.
4 p. m.—Sugg's photometer, landing of south staircase.
4.30 p. m.—Apparatus lent by the hydrographic department of the admiralty, room K.
7 p. m.—Tisley and Spiller's pendulum apparatus, room H.
8 p. m. to 9 p. m.—Little Basses Rock light-house lighted, outside room K.

WEDNESDAY.

3 p. m.—Magnetic observatory, outside room K.

THURSDAY.

FRIDAY.

11 a. m.—Tisley and Spiller's pendulum apparatus, room H.

SATURDAY.

3 p. m.—Mr. Pichler's instruments for illustrating harmony and discord, room Q; Major Ross's blowpipe apparatus, laboratory adjoining room G.
4 p. m.—Dynamic anemometer, (Aeronautical Society,) room H.
6 p. m.—Mr. Etler's electric machine, conference-room.
8 to 9 p. m.—Little Basses Rock light-house lighted, outside room K.
8 p. m.—Lecture by Mr. J. Baillie Hamilton, "New musical instruments," Lecture Theatre, South Kensington Museum.

PROGRAMME FOR THE WEEK ENDING SATURDAY, SEPTEMBER 2, 1876.

EVERY DAY.

10 a. m. to 1 p. m., 2 p. m. to 4 p. m.—Pictet's ice-making machine at work, in engine-house, room F.

MONDAY.

2 to 5 p. m.—The Gramme magneto-electric machine and the electric light, room F.
3 p. m.—Musical instruments, room Q.
8 p. m.—Lecture by Mr. H. W. Chisholm, "Standard weights and measures," conference-room.

TUESDAY.

4 p. m.—Sugg's photometer, landing of south staircase.
7 p. m.—Tisley and Spiller's pendulum apparatus, room H.

WEDNESDAY.

3 p. m.—Magnetic observatory, outside room K.

THURSDAY.

2 to 5 p. m.—The Gramme magneto-electric machine and the electric light, room F.

SATURDAY.

3 p. m.—Mr. Pichler's instruments for illustrating harmony and discord, room Q; Major Ross's blowpipe apparatus, conference-room.
6 p. m.—Mr. Etler's electric machine, conference-room.

No. 13.—REPORT OF REAR-ADMIRAL THORNTON A. JENKINS, U. S. N., INTERNATIONAL CENTENNIAL EXHIBITION, 1876.

INTERNATIONAL EXHIBITION, 1876,
BOARD ON BEHALF OF U. S. EXECUTIVE DEPARTMENTS,
OFFICE OF THE REPRESENTATIVE OF THE NAVY DEPARTMENT,
3703 *Hamilton street, Philadelphia, November* 27, 1876.

SIR: I have the honor, and very great pleasure, to report that the naval branch of the International Centennial Exhibition of 1876 (which formed a very small part, however, of the entire exhibition, which was formally opened on May 10 and formally closed on November 10) proved a greater success than some of its contributors and warmest friends had in the earlier days of the undertaking hoped for.

The deep interest manifested by yourself from the first in the success of the naval exhibition, and your continued anxiety that nothing should be omitted or left undone that could in any way conduce to or add to its success strengthened the hands and gave great encouragement to myself and my associates on centennial duty.

Without assuming to pass judgment upon the professional or popular estimate, as mere exhibits, of the articles and objects arranged in the naval section of the Government building, I may be permitted to say that the opinions of all classes of persons, so far as I have heard, have been most favorable and greatly to the credit of the naval department and naval service of the country.

On the 5th of May (five days in advance of the formal opening of the exhibition) the exhibits in the naval section were arranged and in the main labeled in English, French, and German, showing sections, classes, numbers, names, and descriptions of each objeet. A catalogue, embracing every object on exhibition, was prepared and widely distributed among the different foreign commissioners and the representatives of the different States and Territories of the United States.

A few weeks prior to the closing of the exhibition the very unique and highly interesting exhibits presented by His Majesty the King of Siam to the United States, through Rear-Admiral Reynolds (commanding Asiatic station) and the Navy Department, were received at the Government building, and within a week these curious, wonder-inspir-

ing articles were all arranged in cases and on tables, all properly labeled, and a catalogue made out.

I beg leave to inclose herewith a synoptical table of the naval exhibits and to refer to the printed catalogue for further information on the subject.

I beg leave also to refer to the printed catalogue of the Siamese collection for information which could not well find a place in a short report to the Department.

I trust I may be permitted to say in conclusion that, whatever may have been the misgivings as to probable success in the outset of the undertaking, the naval exhibits at the International Centennial Exhibition of 1876 have been most creditable to the Navy Department, to its distinguished head, to the chiefs of bureaus, and others, who furnished the articles.

I am, sir, very respectfully, your obedient servant,

THORNTON A. JENKINS,
Rear-Admiral, U. S. N.,
Representative Navy Department,
Centennial Exhibition of 1876.

HON. GEOGE M. ROBESON,
Secretary of the Navy, Navy Department, Washington, D. C.

Synoptical list of the naval exhibits in the United States Government building, Fairmount Park, Philadelphia.

SECTION 1.—NAVAL ORDNANCE, ETC.

Fac simile of a "monitor" revolving turret, with two XV-inch guns inside—one on an Eads's steam-carriage, and the other an Ericsson's carriage, complete.

CLASS A.—Heavy ordnance, from XV-inch to the smaller calibers.

CLASS B.—Different calibers of howitzers and Gatling guns.

CLASS C.—Small-arms, old and new.

CLASS D.—Projectiles of every caliber, sections of shells, old and new, &c.

CLASS E.—

CLASS F.—Loading-gear, cannon-locks of different periods; fuses of different kinds and times, and numerous vent-impressions after cannon-firing.

CLASS G.—Models of ordnance, ordnance implements, and utensils of the past and present.

CLASS H.—Ordnance relics.

CLASS I.—Ordnance publications.

CLASS K.—Torpedoes of different kinds used, or proposed to be used: batteries, wires, and all the instruments and appliances used in the torpedo-service; plans of torpedo-station.

CLASS L.—Apparatus for measuring the force of projectiles.

CLASS M.—Dresses and arms of seamen and marines from 1776 to 1876, inclusive.

CLASS N.—Specimens of the different kinds and sizes of gunpowder.

SECTION 2.—NAVIGATION.

CLASS A.—Nautical and surveying instruments used in the United States Navy, embracing chronometers, compasses, magnetic collimator, adjustable binnacle, gravitation-compasses, &c.

CLASS B.—Logs for measuring the speed of vessels; sounding-leads, lines, and mechanical sounding-apparatus.

CLASS C.—Side and head lights for vessels at sea; deck, cabin, and other lamps, &c.; lanterns used on board ship.

CLASS D.—Charts published at the Hydrographic Office of the Navy Department.

CLASS E.—Nautical books published and used in the United States Navy.

CLASS F.—National flags, embracing those from 1775 to 1876, complete; officers' flags, signal-flags, American bunting, and American seamless flags.

CLASS G.—Publications of United States Naval Observatory from its organization to 1876.

CLASS H.—Three buildings, *fac similes* of those used in observing the transit of Venus, with a sidereal clock, and the other instruments actually used by the observers at the different stations.

CLASS I.—Relics, photographs, charts, maps, medals, journals, reports, &c., relating to or obtained from the Arctic regions during the different American Arctic voyages of exploration and discovery.

CLASS K.—The American Nautical Almanac and nautical almanac publications to 1876.

CLASS L.—Relics of Captain John Paul Jones, of the Continental Navy.

SECTION 3.—EQUIPMENT.

CLASS A.—Ships' galleys—modern.

CLASS B.—From the rope-walk of the Boston navy-yard: American and Russian hemp rope, Manila and other grass rope, and small stuff of different sizes, including a hemp cable of 25 inches; specimens of the different hemp and other fibers used in the Navy for making rope.

CLASS C.—Wire rope, made at the Boston navy-yard, of all the different sizes of hawsers to the smallest size made anywhere.

CLASS D.—Specimens of chain cables; shackles for chain cables, anchor-buoys, link and shackle bending machine in use at Washington navy-yard, &c.

CLASS E.—Specimens of cotton and hemp canvas of different numbers used in the Navy.

CLASS F.—Hoisting-gear.

CLASS G.—Specimens of iron which have been subjected to test by a commission under orders of the Navy Department.

SECTION 4.—YARDS AND DOCKS.

CLASS A.—Model of stone dry-docks at Kittery, Me., Boston, Mass., New York, Norfolk, Va., and Mare Island, Cal., navy-yards.

CLASS B.—Specimens of oak taken from different historical vessels of the Navy.

CLASS C.—Plans of different navy-yards, dry-docks, cranes, derricks, &c.

SECTION 5.—CONSTRUCTION AND REPAIR.

CLASS A.—Models of vessels of war, old and new.

CLASS B.—Bent knees for ship building.

CLASS C.—Relic of the ship Philadelphia from Tripoli, Africa, and of the Lawrence from Lake Erie; relic of the Kearsarge.

SECTION 6.—MEDICINE AND SURGERY.

CLASS A.—Complete set of surgical instruments, set of surgical appliances, hospital-stores, dispensary furniture, model of sick-bay, model of hospital ship, articles for sanitary purposes used on board vessels of war, photographs of the different naval hospitals, stationery, blank books, forms, &c.

SECTION 7.—PAY, PROVISIONS, AND CLOTHING.

CLASS A.—Specimens of the different articles composing the Navy ration.

CLASS B.—Specimens showing original packages as prepared for sea.

CLASS C.—Specimens of uniform clothing used by seamen in the Navy.

CLASS D.—Small stores served to the men on board vessels of war, such as tea, coffee, sugar, tobacco, pepper, &c.; tape, needles, pins, sewing materials, &c.

CLASS E.—Stationery, blank forms, books, returns, &c.

SECTION 8.—STEAM-ENGINEERING.

CLASS A.—Two marine steam-engines, two tubular steam-boilers, steam-cutter engines, steam-cutter propellers, fresh-water-distilling apparatus, filtering apparatus for fresh water, indicators, saliometers, tools, implements, gum packings, drawings of engines and boilers, photographs, &c., of steam machinery.

SECTION 9.—PORTRAITS OF DISTINGUISHED DECEASED NAVAL OFFICERS.

Forty-one portraits of distinguished deceased naval officers, commencing with Commodore Esek Hopkins, the first commander-in-chief of the Continental Navy in 1775.

Two portraits of representative petty officers of former times.

No. 14.—DETAILED MOVEMENTS OF VESSELS.

NORTH ATLANTIC STATION.

The force on this station is now under the command of Rear-Admiral S. D. Trenchard, who relieved Rear-Admiral William E. Le Roy on the 31st of August, 1876. Rear-Admiral J. R. M. Mullany, who was in command of the station at the last report, was relieved by Rear-Admiral Le Roy on the 14th of February, 1876.

The flag of Rear-Admiral Mullany was transferred from the Worcester to the Hartford on the 5th of January, and the Worcester was put out of commission as a cruiser on the 18th of that month.

The force on the station consists of the Hartford, (flag-ship,) 18 guns; Plymouth, 12 guns; Swatara, 8 guns; Ossipee, 8 guns; Adams, 6 guns; Essex, 6 guns; Huron, 4 guns; Ranger, 4 guns; Shawmut, 3 guns; New Hampshire, store-ship at Port Royal; Pawnee, hospital-ship at the same place; tug Seaweed; and the iron-clads Ajax, 2 guns; Catskill, 2 guns; Dictator, 2 guns; Canonicus, 2 guns; Lehigh, 2 guns; Man-

hattan, 2 guns; Mahopac, 2 guns; Montauk, 2 guns; Passaic, 2 guns; Saugus, 2 guns; and Wyandotte, 2 guns.

The Brooklyn, Monongahela, Congress, Marion, Vandalia, Alert, and Pinta were also attached to the station part of the year.

The Hartford arrived at Norfolk, Va., from New York, on the 24th of December, 1875, and the flag of Rear-Admiral Mullany was hoisted on board January 5, 1876.

On the 14th of February, Rear-Admiral William E. Le Roy hoisted his flag, and on the 9th of March left Norfolk for Hampton Roads, Va., to organize the fleet, &c. On the 14th, a battalion of men was landed at Fortress Monroe and drilled with satisfactory results. The battalion consisted of men from the Hartford, Plymouth, Marion, Vandalia, and Huron, and was composed of 8 companies of blue-jackets, 288 men; 3 companies of marines, 102 men; and 6 howitzers, 126 men; total, 516 men.

On the 21st of March sailed for Port Royal, S. C., arriving there about the 27th. On the 23d of April sailed for Key West, Fla., and departed thence May 2 for Tampico, but touched at Brazos Santiago, Texas, the admiral having received information rendering that course necessary. After remaining there until the 15th, left for Tampico, and reached that place on the 22d. Finding American interests not in immediate danger, sailed June 14, and arrived at Port Royal on the 27th. On the 8th of July proceeded to Philadelphia, arriving on the 12th, and remained until September 26, on duty in connection with the Centennial Exhibition. Rear-Admiral S. D. Trenchard relieved Rear-Admiral Le Roy of the command of the station, and hoisted his flag on the 31st of August. The Hartford left on the 26th of September, and anchored at Hampton Roads the next day, where she still remains.

The Plymouth left the navy-yard, Norfolk, December 14, 1875, and dropped down to an anchorage off the flag-ship, Norfolk, thence to Hampton Roads March 9, 1876; sailed for Port-au-Prince on the 15th, in company with the Vandalia, and arrived there on the 26th. Left Port-au-Prince on the 22d of April, and arrived at Kingston, Jamaica, on the 27th, remaining there until the 2d of May, and leaving on that day, touching at Cape Mole, St. Nicola, Haiti, Genoine, St. Marks, and thence back to Port-au-Prince, reaching the last-named place on the 7th. Left on the 8th, bound to St. Domingo and other ports, where she touched, and returned to Port Royal on the 5th of June. Sailed for Charleston, S. C., and gave the crew liberty, and on the 8th of July left for New York, and reached there on the 14th, departing thence on the 28th. Arrived at Halifax on the 3d of August, remained until the 12th, touched at Gloucester on the 15th, and, leaving there on the 17th, reached Boston the same day. Left on the 25th, touched at Gardiner's Bay, and returned to New York on the 30th. On the 19th of September sailed for Philadelphia, which port she reached on the 21st. Remained there on duty in connection with the Centennial Exhibition, relieving the Hartford, until the 21st of November, when she left in company with the Essex, and anchored in Hampton Roads November 23, where she remains.

The Ossipee left Port Royal about February 16 for Pensacola, Fla., and arrived there on the 29th. Sailed on the 12th of April for a short cruise to Cuba, returning to Pensacola on the 23d; and left on the 25th for Port Royal, with the iron-clad Manhattan, reaching that port on the 2d of May. Sailed from Port Royal, on account of sanitary reasons, on the 16th, for Portland, Me., arriving there on the 27th, and remaining there until the 5th of July. Left on that day, touched at Mount Desert,

and arrived at Boston on the 10th, which port she left on the 23d, and anchored at Hampton Roads on the 27th. On the 14th of October she proceeded to New Orleans, La. On her way she put into Key West for coal, having encountered a hurricane, but sustained damages of no great extent; sailed on the 25th, and reached New Orleans, where she now is.

The Swatara left Para, Brazil, December 3, 1875, whither she had gone to offer passage to the United States to indigent Americans there; arrived at Port Royal, S. C., December 27, and joined the station. In February, 1876, departed for Pensacola, reaching that port on the 29th; and leaving on the 27th of March, with the iron-clad Mahopac, for Port Royal, where she arrived on the 10th of April. On the 21st, left for a cruise to Key West and the Gulf of Mexico. May 2, arrived at Key West from Havana, and departed thence for Tampico, Mexico; left there about the 31st for a cruise to the southward, to touch at Tuspan on her way to Vera Cruz. On the 13th of July, returned to Port Royal from cruise, having visited all the ports on the coast of Mexico from Truxpan to Tobasco, and on the 20th left for Halifax, which port she reached on the 26th. Left on the 8th of August for Portland, Me., Boston, Newport, and New York; visited those ports, and arrived at the last-named on the 6th of September, and remains there.

The Adams was put in commission at Boston on the 21st of July, and left for Philadelphia on the 6th of August. Arrived at Philadelphia on the 9th, and joined the station. On the 4th of September departed for Norfolk; arrived on the 6th, and left on the 16th for Hampton Roads, where she remained until the 17th of November, when she sailed for Port Royal.

The Essex was put in commission at Boston on the 3d of October, and sailed for Philadelphia on the 24th, reaching that port on the 28th. On the 21st of November left for Hampton Roads, and arrived there on the 23d, where she remains.

The Huron reported at Norfolk December 17, 1875, for duty on the station, and on the 9th of February, 1876, was ordered to Hampton Roads. March 21, left for Port Royal, S. C., arriving there on the 27th. On the 10th of April sailed for Vera Cruz, where she arrived on the 24th. Left there, and arrived at Key West on the 10th of June for coal and provisions, and returned to Vera Cruz, reaching there on the 28th. July 1, left Vera Cruz and visited Frontera, Tobasco, Santa Anna, and other ports, returning on the 21st. August 4, arrived at Port Royal, and sailed on the 13th for Portsmouth, N. H.; arrived on the 18th, and left on the 26th for Boston; reached there on the 28th, and sailed on the 16th September for Hampton Roads, where she remains.

The Shawmut left Aspinwall December 4, 1875, and arrived at Key West on the 13th. In February, 1876, ordered to Pensacola; arrived there on the 1st of March, and left on the 21st with the iron-clad Ajax for Port Royal, reaching there on the 7th of April. Left on the 19th and reached Tampico, Mexico, on the 4th of May. Left on the 1st of June for Key West for coal and provisions; arrived there on the 14th, and returned to Tampico on the 24th; departed thence on the 3d of July, and visited Tuxpan and Vera Cruz, arriving at Key West on the 1st of August; sailed for Port Royal on the 3d, arrived the 7th, and left the next day for New London, Conn.; remained there until the 9th of September; sailed that day for New York, arriving the next day, and continuing there until the 30th, when she departed for Hampton Roads, reaching there October 2d, where she remains.

The New Hampshire left Norfolk May 10th, in tow of the Powhatan,

for Port Royal, arrived on the 15th, and remained there as a store-ship.

The Pawnee has continued at Port Royal since April 13, 1875, and is used as a hospital-ship.

The iron-clad Dictator remains at Port Royal, and the iron-clad Canonicus at New Orleans. The iron-clads Catskill, (arrived in March,) Ajax, (arrived April 7,) Mahopac, (arrived April 10,) Saugus, (arrived April 14,) Manhattan, and Lehigh, (arrived May 2,) having been convoyed from the Pensacola and Norfolk navy-yards, remain at Port Royal.

The iron-clads Wyandotte, Passaic, and Montauk left Norfolk and anchored in Hampton Roads November 24.

The Brooklyn arrived at Port Royal February 14, left April 22 for Norfolk, reached there on the 25th, and departed on the 22d of June for New York, and arrived there on the 30th, and was put out of commission on the 21st of July.

The Congress arrived at Port Royal January 17, left in the latter part of April for Philadelphia, reaching that port May 6, remained there on duty connected with the Centennial Exhibition, (furnishing four companies of sailors as escort to the President of the United States on the opening day,) until July 10, sailed on that day, and arrived at Portsmouth, N. H., on the 14th, and was put out of commission on the 26th.

The Monongahela arrived at Port Royal February 14, left and arrived at Pensacola on the 29th, and sailed thence April 6, with the iron-clad Saugus, for Port Royal, arriving there on the 13th. On the 24th, for sanitary reasons, was ordered to Portland, Me., where she arrived in May, and from thence sailed to Newport, R. I., arriving there June 13, and after a short stay left for Norfolk, which port she reached and was put out of commission July 15. On the 6th of September was put in commission as a training-ship.

The Marion was put in commission at Portsmouth, N. H., January 12, and sailed on the 22d for Norfolk, Va., arriving at that navy-yard February 9, and left on the 28th, when she joined the station at Hampton Roads, left on the 21st March, and reached Port Royal on the 27th, departed thence on the 19th April for Tampico, Mexico; reached Key West April 21st, and left for the Rio Grande April 22; May 10, at Brazos, Texas, which place she left on the 29th for Tampico, arriving there on the 31st. June 4th departed for Key West, arriving there on the 20th, and sailed on the 23d for Lisbon, Portugal, to join the European station.

The Vandalia was put in commission at Boston, Mass., on the 10th of January, and sailed for Norfolk on the 4th of February, and arrived about the 7th. On the 15th of March left Hampton Roads for Port-au-Prince, and reached that port on the 27th. Left on the 7th April for Jacmel, Hayti, arrived on the 9th, and departed same day for Kingston, Jamaica, where she anchored on the 11th, and, having taken in coal and provisions, proceeded on the 19th back to Port-au-Prince, arriving on the 22d. Left on the 8th of May for Aspinwall, at which place arrived on the 15th, departed thence June 10 for a brief cruise to St. Andrew's Island at the suggestion of the United States consul, and returned to Aspinwall on the 17th. On the 2d of June a party of officers, blue-jackets, and marines from the ship, with Colombian troops, participated in the funeral ceremonies of the late Rear-Admiral Napoleon Collins, United States Navy. Left Aspinwall July 14, and reached Port Royal on the 25th, departed thence on the 29th, and arrived at New York August 2d, and on the 9th of September left to join the European station.

The Alert left Norfolk February 25 with the iron-clad Catskill for

Port Royal, S. C., and arrived there about 8th of March, and on the 31st departed for New York, reaching there on the 8th of April, and left on the 26th of May to join the Asiatic station.

The Pinta left Port Royal in February, and arrived at Norfolk on the 29th of that month with invalids, &c., from Port Royal, and was put out of commission on the 17th of April.

The Ranger was put in commission at Wilmington, Del., on the 27th November.

SOUTH ATLANTIC STATION.

The force at this station is now under the command of Commodore C. H. B. Caldwell, and consists of the Richmond, flag-ship, 14 guns, the former flag-ship of the South Pacific station, and the Frolic.

The Richmond arrived at Montevideo, Uruguay, October 21, having left Valparaiso, Chili, September 12.

The Frolic arrived at Rio de Janeiro, Brazil, from the United States in the latter part of November, 1875; left about December 12, and reached Montevideo, Uruguay, on the 21st, and took the place on the station of the Wasp, which was condemned and sold. During the year the Frolic has been engaged in visiting Maldonado, Colonia, Ensemada, Buenos Ayres, Montevideo, and other ports within the limits of the station.

EUROPEAN STATION.

The following vessels comprise the force on the European station, under command of Rear-Admiral John L. Worden: Marion, 7 guns; Vandalia, 8 guns.

The Franklin, (flag-ship,) 39 guns, and the Alaska, 12 guns, were attached to the station most of the year.

The Franklin arrived at Lisbon on the 8th of December, 1875, and, remaining there until the 19th of February, 1876, left on that day for Southampton, England; arrived on the 25th; departed thence on the 14th of March for Cherbourg, France, which port she reached on the 17th, and left on the 22d for Gibraltar, where she arrived on the 30th. On the 7th of April departed for Villefranche; reached there on the 12th; sailed thence on the 16th of May, and arrived at Salonica, Turkey, on the 24th. Left that port June 5th, and visited Smyrna, Turkey; Beyrout, Syria; and Messina, Sicily, remaining a few days at each of these places, and returning to Villefranche on the 4th of July, where she remained until the 13th, when she sailed for Leghorn, which port she reached on the 15th. On the 29th of August left, and same day arrived at Spezia, continuing there until the 8th of September, when she left for Villefranche, arriving there the next day. On the 14th she departed for Gibraltar, on her return to the United States, reaching there on the 20th, and leaving on the 24th for Vigo, Spain. She arrived at Vigo on the 26th, and on the 28th sailed for the United States. She reached New York on the 23d of November via St. Thomas.

The Marion left Key West June 23, and arrived at Lisbon on the 18th of July; departed thence on the 26th for Leghorn, reaching there August 3, and remaining until the 14th; left on that day for Smyrna; arrived on the 21st, and departed thence on the 24th for Constantinople, arriving there the 26th. On the 6th of September sailed for Villefranche, and arrived on the 13th, and departed on the 18th for Spezia, entering that port the next day. On the 22d left for Genoa, and arrived the same day, where she remains.

The Vandalia left New York on the 9th of September, and arrived at Lisbon on the 5th of November, where she was at the last report.

The Alaska arrived at Lisbon on the 6th of December, 1875, and on the 1st of January following made a cruise to the coast of Africa on account of troubles in Liberia. Having successfully accomplished the object of her cruise, she left the Gaboon River on the 5th of April, and reached Funchal, Madeira, on the 12th of June; leaving there, and touching at Gibraltar, she arrived at Villefranche on the 6th of July. On the 13th she departed for Genoa, arriving the next day, and remaining until the 3d of August, when she sailed for the United States; arrived at Boston September 20; left the same day, and reached New York on the 25th, and was put out of commission October 5.

NORTH PACIFIC STATION.

The force on this station, under the command of Rear-Admiral Alexander Murray, consists at present of the Pensacola, (flag-ship,) 22 guns, and the Lackawanna, 10 guns.

The Tuscarora and Portsmouth were also attached to the station during the year.

Rear-Admiral John J. Almy was relieved of the command of this station on the 1st of July by Rear-Admiral Alexander Murray.

The Pensacola returned January 26 to San Francisco from her cruise to Lower California and the west coast of Mexico, having left Acapulco on the 27th of December, 1875. On the 19th of August, 1876, left the navy-yard, Mare Island, Cal., for a cruise along the Mexican and Central American coasts, and thence to Panama; arrived at Mazatlan, Mexico, September 10, and left that day for La Paz, reaching there on the 23d, and remained until about October 10, when sailed for Acapulco, arriving on the 21st *en route* to Panama, and reaching there about the 25th of November.

The Lackawanna sailed January 25 for La Paz and Lower California; arrived at San Blas, Mexico, February 10, and on the 14th steamed for Mazatlan, arriving the following day; from thence cruised along the west coast of Mexico, and visited Guaymas, La Paz, and Mazatlan; sailed thence for the Hawaiian Islands, and arrived at Honolulu about April 26, and cruised among those islands; left September 12 for Guaymas, La Paz, and other Mexican ports.

The Tuscarora has been engaged on deep-sea soundings between the Hawaiian and Fiji Islands, and also in inquiring into the possible abuse of our flag in kidnapping natives in the South Sea Islands, but found no cases of such abuse. She left the Fiji Islands 25th January, and arrived at Brisbane Roads, Australia, February 14, and cast soundings between those places; arrived at Sydney, Australia, March 9, and on the 11th left for the Samoan Islands; visited those islands, and inquired into and reported on the troubles there, and sailed for Honolulu, arriving there on the 27th of May; left on the 10th of June, and reached San Francisco July 3, and was put out of commission on the 14th of September.

The Portsmouth, on her return to the navy-yard, Mare Island, Cal., July 14, 1875, from a cruise to the west coast of Mexico, was put out of commission as a cruiser attached to the station, and was put in commission as a training-ship for boys, and continued on that duty until August 7, 1876, when she was put out of commission at the navy-yard, Mare Island.

SOUTH PACIFIC STATION.

The vessels now on this station are the Omaha, 12 guns, and the Onward, 3 guns. The Pensacola, flag-ship of the North Pacific station, arrived at Panama about November 25, to cruise within the limits of this station.

The Richmond, former flag-ship, left Callao, Peru, on the 27th November, 1875, reaching Coquimbo, Chili, on the 7th of December, and departing thence on the 10th, arrived at Valparaiso the next day; left Valparaiso, April 4, 1876, and arrived at Coquimbo on the 6th; sailed and reached Callao, May 20. On the 13th of July, Commodore C. H. B. Caldwell relieved Rear-Admiral Reed Werden, who had been in command, since September 25, 1875, of the command of the station, and on the 12th of August the Richmond sailed from Callao for the South Atlantic station; went to Valparaiso and left on the 12th of September, touching at Valdivia for four days, and entering the Straits of Magellan on the 28th September; left October 7, and arrived at Montevideo, Uruguay, on the 21st.

The Omaha left Panama November 26, for Payta; thence to Callao and Valparaiso, arriving at the last-named port, February 12, 1876. On the 1st of March, sailed for Juan Fernandez, to make a survey of those islands, and returned on the 26th, having made a very accurate survey. Left Valparaiso about the 30th April, and arrived at Coquimbo, Chili, May 2; visited the ports of Caldera, Chili; Autofagasta and Cobija, Bolivia; Pabellon de Pica and Pisaqua, coast of Peru, the Omaha being the first vessel of war that had anchored in the last-named port; Mollendo and Pisco, Peru; and sailing from Pisco July 14, arrived at Calloa the next day. September 1, departed and reached Guayaquil, Ecuador on the 8th; sailed for Payta, Peru, after a stay at Guayaquil, reaching that port on the 30th, and remaining until the 16th of October, when sailed for Callao; arrived at Aucon, Peru, October 21, and, in obedience to order of Navy Department, left for Panama, arriving there on the 16th of November, where she remains.

The Onward, store-ship for the station, remains at Callao.

ASIATIC STATION.

The force on this station, under the command of Rear-Admiral William Reynolds, consists of the Tennessee, (flag-ship,) 23 guns; Kearsarge, 6 guns; Ashuelot, 6 guns; Monocacy, 6 guns; Yantic, 3 guns; Alert, 4 guns, and Palos. The Saco was also attached to this station a part of the year.

The Tennessee arrived at Nagasaki from the United States November 30, 1875, having touched *en route*, and after having passed through the Suez Canal, at Aden, Bombay, Colombo, Penang, Singapore, Manila, Amoy, and Wusung. On the 27th January, 1876, left Nagasaki for Wusung, reaching there on the 30th, and leaving on the 11th February, arrived at Shanghai; remained there until March 30, and reached Yokohama, Japan, on the 8th of April, remaining there until the 5th of June, when sailed for Kobe, Japan, arriving there on the 7th. On the 6th of July left for Yokohama, reaching there the 7th, and departing on the 29th, arrived at Hakodadi, Japan, August 1. On the 19th, departed and returned to Yokohama, arriving on the 21st; left September 9, and reached Nagasaki on the 17th, and on the 19th sailed for Cheefoo, where she arrived on the 22d, and intended to leave the same day for

New-chwang and the mouth of the Peiho, the admiral and officers proposing to visit Peking.

The Kearsarge, during the month of December, 1875, was at Nagasaki; left January 22, 1876, and arrived at Shanghai on the 26th, and remained there until March 22, when she sailed for Nagasaki, Hong-Kong, and Manila, reaching the last named on the 7th of April, having touched at the other ports; left on the 17th and returned to Hong-Kong, arriving there on the 20th; left July 10 for Swatow, and from thence sailed for Manila, and after remaining there returned to Hong-Kong; left August 10, reached Nagasaki August 15, sailed thence to Yokohama, arriving on August 20, and left September 9 for Vladivostock.

The Monocacy, during the month of December, 1875, was at Ningpo, and arrived at Shanghai January 30, and remained there, for new boilers and repairs, until May 30; left that day for Nagasaki and arrived June 2; departed thence June 6, and reached Kobe on the 8th; left on the 22d for a cruise in the Inland Sea, and returned on the 27th; left Kobe July 6, arrived at Nagasaki on the 8th, and same day departed for Swatow and reached there about the 30th, and remained, attending to wreckers of the Pacific Mail Steamship Company's steamer Japan, and left in the latter part of August for a cruise up the coast of China to Shanghai.

The Ashuelot, during the month of December, 1875, was at Shanghai, receiving new boilers, and remained there until March 22, when she sailed for Hong-Kong, arriving there on the 31st, and leaving on the 14th of April, went to Bangkok, Siam, and received on board the articles prepared for the United States Centennial Exhibition by the Siamese government, and returned to Hong-Kong June 10; left on the 19th for Swatow and other parts to the northward; arrived at Pagoda Anchorage, Foochow, China, July 2, from Amoy, thence to Ningpo and Shanghai, reaching the last named the latter part of the month, and leaving in September for Cheefoo.

The Yantic was at Nagasaki during the month of December, 1875, and remained until January 14, 1876, when she sailed for Shanghai, arriving on the 17th and remaining for repairs. On the 22d of March left for Amoy, Macao, and Hong-Kong; arrived at Macao April 2, (having stopped at Amoy from March 27 to 31,) and departed on the 9th, reaching Hong-Kong same day; left June 8, reached Nagasaki on the 19th, and arrived at Yokohama on the 23d, where she is repairing.

The Palos, during the month of December, 1875, was repairing at Shanghai, and remained until March 22, when she sailed for Hong-Kong and Canton, arriving at Hong-Kong the 28th and Canton April 30. Left Canton on the 7th of June, arriving same day at Hong-Kong; departed on the 8th, and reached Macao same day; returned to Hong-Kong on the 10th; sailed for Amoy; left and arrived at Pagoda Anchorage July 2, and at Shanghai on the 31st, and left on the 10th of August for Cheefoo, thence to Tientsin.

The Alert left New York May 26, for the Asiatic Station, via Suez Canal; touched at Gibraltar and Malta, passed through the canal July 23, touched at Aden and other ports, and arrived at Hong-Kong on the 11th of September, and thence sailed for Swatow and other ports south of Shanghai.

The Saco was at Yokohama during the month of December, 1875; on the 10th of January, 1876, arrived at Nagasaki, and after a short stay returned to Yokohama; on the 6th of May left and arrived at San Francisco on the 21st of June, and was put out of commission on the 13th of July.

TRAINING-SHIPS, ETC.

The Juniata, formerly attached to the European station, left Gibraltar December 18, 1875, touched at Madeira, afforded relief to German brig Avance at sea, and reached St. Thomas January 15, 1876, sailing thence on the 18th, and arriving at Port Royal on the 25th; left on the 29th, touched at Norfolk February 4, departed the next day, and arrived at Baltimore on the 6th, and cruised as a training-ship for boys in the Navy, reaching Norfolk, Va., on the 31st of August, transferring her officers and men to the Monongahela, and was put out of commission September 6.

The Gettysburg returned to the navy-yard, Washington, June 14, 1876, having been engaged on telegraphic longitude work in the West Indies since the latter part of the year 1875, and was put out of commission on the 26th. On the 20th of September was put in commission at Washington, left for Norfolk on the 27th, and arrived the next day, and on the 17th October sailed on a surveying expedition, &c., for the Mediterranean.

The store-ship Supply left the New York navy-yard, January 7, 1876, to receive and bring to the United States for the Centennial Exhibition contributions from American artists residing in Europe, and also to bring the naval monument. Arrived at Civita Vecchia February 21, sailed March 2, and reached Leghorn on the 5th; left on the 20th for Gibraltar, arriving April 6, departing on the 8th, and reaching Philadelphia May 12, landed her goods, and June 9 went to Washington, arriving on the 16th, and landed the portion of the monument which she brought. On the 3d of July left for New York, arriving on the 8th, and sailing on the 17th as a training-ship for boys, and continued on that duty until September 30, when put out of commission at Boston.

O

PRESENTED

TO THE

BANGOR MECHANIC ASSOCIATION

BY

HON. HANNIBAL HAMLIN.

..... 18 .....